This is a digital copy of a book that was preserved for generations on library shelves before it was carefully scanned by Google as part of a project to make the world's books discoverable online.

It has survived long enough for the copyright to expire and the book to enter the public domain. A public domain book is one that was never subject to copyright or whose legal copyright term has expired. Whether a book is in the public domain may vary country to country. Public domain books are our gateways to the past, representing a wealth of history, culture and knowledge that's often difficult to discover.

Marks, notations and other marginalia present in the original volume will appear in this file - a reminder of this book's long journey from the publisher to a library and finally to you.

Usage guidelines

Google is proud to partner with libraries to digitize public domain materials and make them widely accessible. Public domain books belong to the public and we are merely their custodians. Nevertheless, this work is expensive, so in order to keep providing this resource, we have taken steps to prevent abuse by commercial parties, including placing technical restrictions on automated querying.

We also ask that you:

+ *Make non-commercial use of the files* We designed Google Book Search for use by individuals, and we request that you use these files for personal, non-commercial purposes.

+ *Refrain from automated querying* Do not send automated queries of any sort to Google's system: If you are conducting research on machine translation, optical character recognition or other areas where access to a large amount of text is helpful, please contact us. We encourage the use of public domain materials for these purposes and may be able to help.

+ *Maintain attribution* The Google "watermark" you see on each file is essential for informing people about this project and helping them find additional materials through Google Book Search. Please do not remove it.

+ *Keep it legal* Whatever your use, remember that you are responsible for ensuring that what you are doing is legal. Do not assume that just because we believe a book is in the public domain for users in the United States, that the work is also in the public domain for users in other countries. Whether a book is still in copyright varies from country to country, and we can't offer guidance on whether any specific use of any specific book is allowed. Please do not assume that a book's appearance in Google Book Search means it can be used in any manner anywhere in the world. Copyright infringement liability can be quite severe.

About Google Book Search

Google's mission is to organize the world's information and to make it universally accessible and useful. Google Book Search helps readers discover the world's books while helping authors and publishers reach new audiences. You can search through the full text of this book on the web at http://books.google.com/

GODFREY LOWELL CABOT SCIENCE LIBRARY
of the Harvard College Library

This book is
FRAGILE
and circulates only with permission.
Please handle with care
and consult a staff member
before photocopying.

Thanks for your help in preserving
Harvard's library collections.

WORTHINGTON

153 QUEEN VI

WORTHINGTON.

TRADE MARK.

Ammonia Pumps.
Air Pumps.
Air and Circulating Pumps.
Ballast Pumps.
Bilge Pumps.
Boiler-Feed Pumps.
Boilers and Pumps combined.
Brewery Pumps.
Circulating Pumps.
Compound Pumps.
Compound Condensing Pumpi
Engines.
Compound Pressure Pumping
Engines.
Condensers.
Drainage Pumps.
Fire Pumps.
Electrical Pumps.

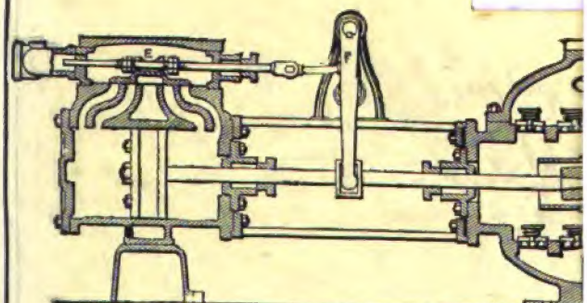

WORTHINGTON REGULAR PATTER

(SECTIONAL VIEW.)

WORT

For all Services, and with Gun

CATALOGUES

INE CO.

N, E.C.

ORTHINGTON.

RADE MARK.

Elevator Pumps.
t Condensers.
Pumps.
e Pumps.
ps.
mps.
umps.
y Pumps.

nger Pumps.
Vater Supply Pumps.
nery Pumps.
umps.
ps.
Pumps.
r Fire Pumps.
umps.
ers.

PLUNGER PUMP.

all requirements.

ON.

THE

PHOSPHOR BRONZE COMPANY,

LIMITED.

87 SUMNER STREET, SOUTHWARK, LONDON, S.E.

AND AT BIRMINGHAM, LIVERPOOL AND ETRURIA.

Sole Makers of the Original "COG WHEEL" and "VULCAN" Brands of

"PHOSPHOR BRONZE"

The best and most durable Alloys for Slide Valves, Bearings, Bushes, Eccentric Straps, and other parts of Machinery exposed to friction and wear, Pump Rods, Pumps, Piston Rings, Pinions, Worm Wheels, &c.

(SEE TESTIMONIALS.)

SOLE MAKERS OF

BULL'S METALS.

(MALLEABLE BRONZE.)

Strong as Steel, Malleable as Wrought Iron, Non-corrodible as Gun Metal,

INGOTS, PROPELLERS & OTHER CASTINGS, FORGINGS, STAMPINGS, RODS & SHEETS.

"DURO METAL"

(Registered Trade Mark.)

Alloy B, specially adapted for BEARINGS for HOT NECK ROLLS of IRONWORKS, TIN-PLATE MILLS, &c.

ROLLED & DRAWN PHOSPHOR BRONZE, SILICIUM BRONZES, BRASS, GERMAN SILVER, GUN METAL AND MANGANESE BRONZE.

BABBITT METAL, "VULCAN" BRAND, PLASTIC METAL, "COG WHEEL" BRAND, "WHITE ANT" METAL cheaper than Babbitt's and equal to Antifriction Metals at double the price.

PHOSPHOR TIN AND PHOSPHOR COPPER, "COG WHEEL" BRAND.

Please specify the manufacture of the Phosphor Bronze Company, Limited, to prevent imposition and error.

THWAITES'

IMPROVED

CAPELL CENTRIFUGAL PUMP

WITH DIRECT ACTING STEAM ENGINE COMBINED,

Suitable for Board Ship, Graving Docks, Irrigation Works, etc.

PRICES AND FULL PARTICULARS ON APPLICATION.

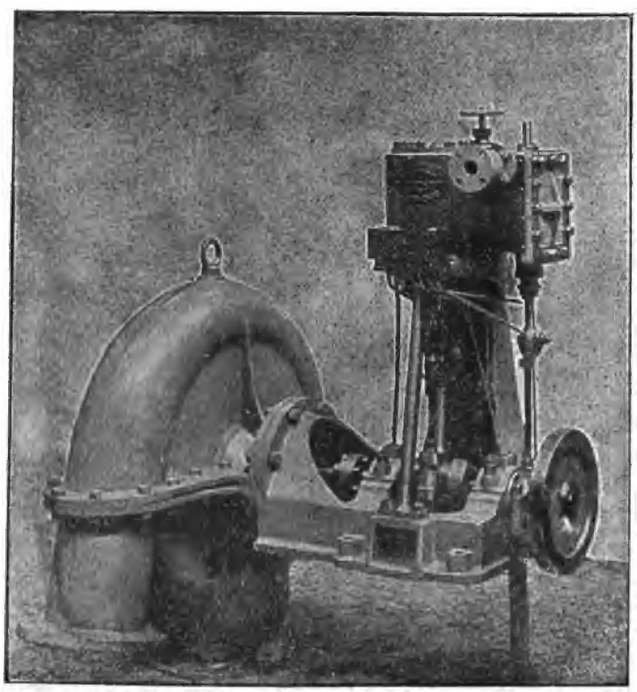

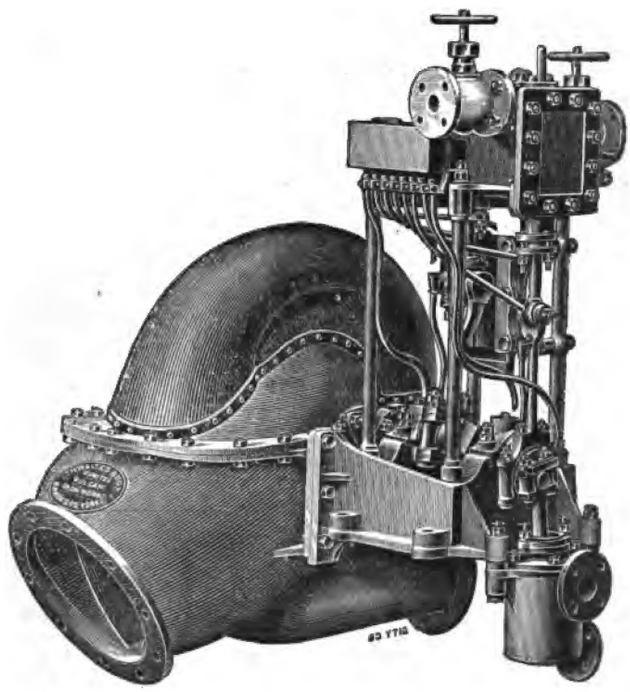

THWAITES BROS., LTD.

Vulcan Iron Works, BRADFORD, YORKSHIRE.

Telegraphic Address: "THWAITES, BRADFORD."

CATALOGUES AND PRICE LISTS ON APPLICATION.

PUMPS

AND

PUMP MOTORS

PUMPS

AND

PUMP MOTORS

A MANUAL

FOR THE USE OF HYDRAULIC ENGINEERS

BY

PHILIP R. BJÖRLING,

HYDRAULIC ENGINEER,

AUTHOR OF 'PRACTICAL HANDBOOK ON PUMP CONSTRUCTION,' Etc.

VOLUME II.

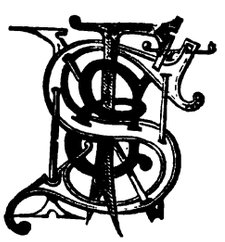

London:
E. & F. N. SPON, 125 STRAND

New York:
SPON & CHAMBERLAIN, 12 CORTLANDT STREET

1895

Eng 981.14F

HARVARD COLLEGE
APR 9 1898
LIBRARY.

Engineering appropriation.
~~168.8~~
38.1
3 I

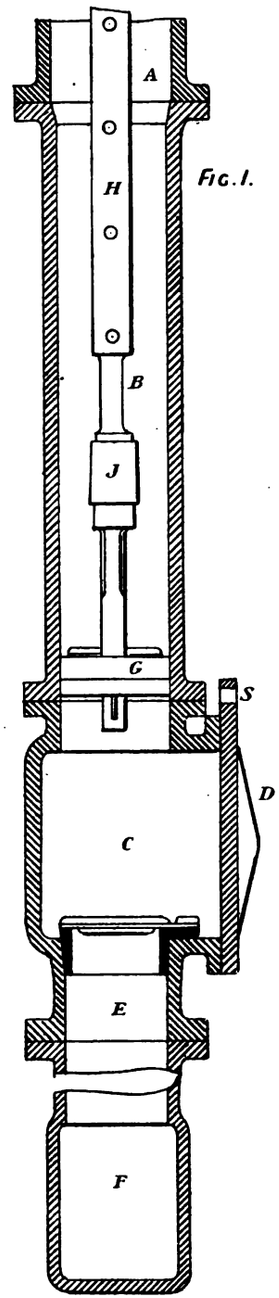

FIG. 1.

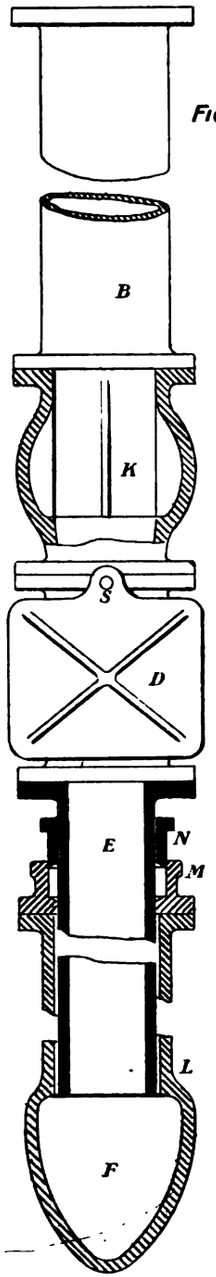

FIG. 2

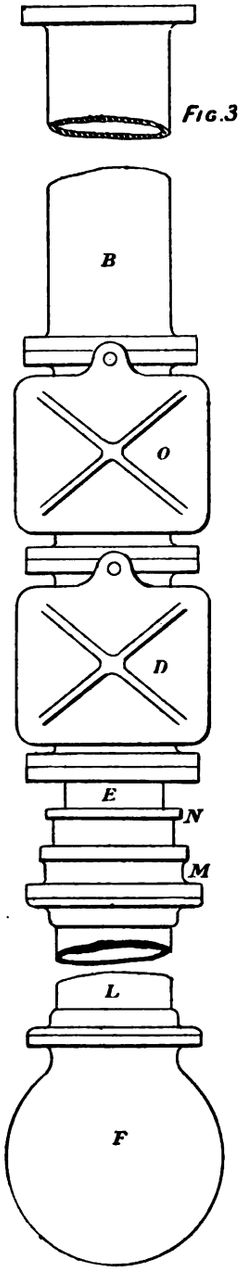

FIG. 3

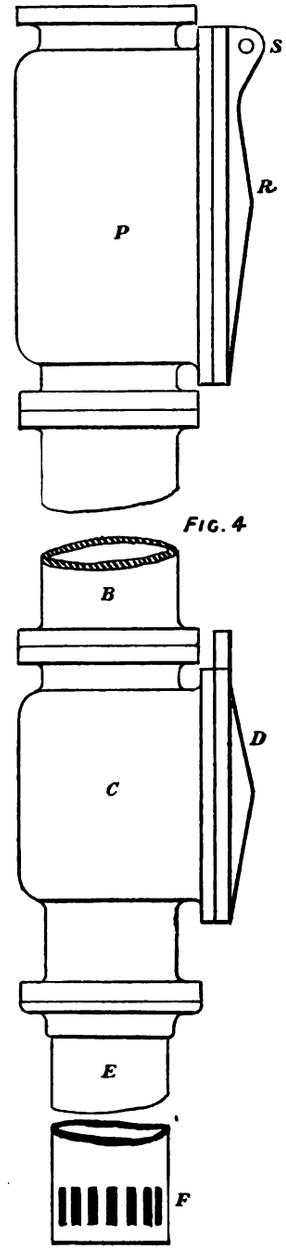

FIG. 4

Plate I

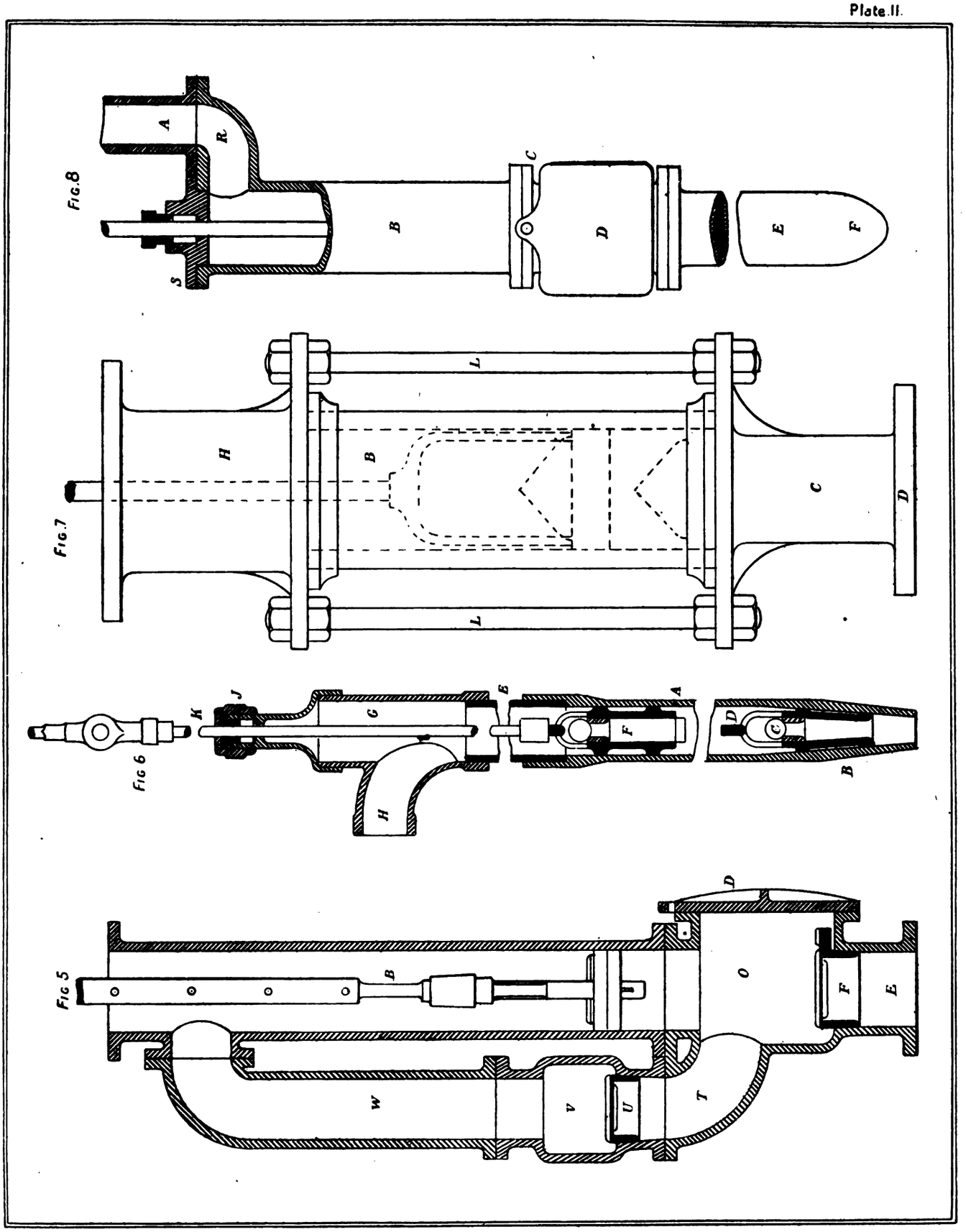
Fig.8
A
R
S
B
C
D
E
F
Fig.7
H
L
B
C
D
L
Fig 6
K
J
G
E
A
F
D
C
B
H
Fig 5
B
D
O
F
E
W
V
U
T

Fig 9

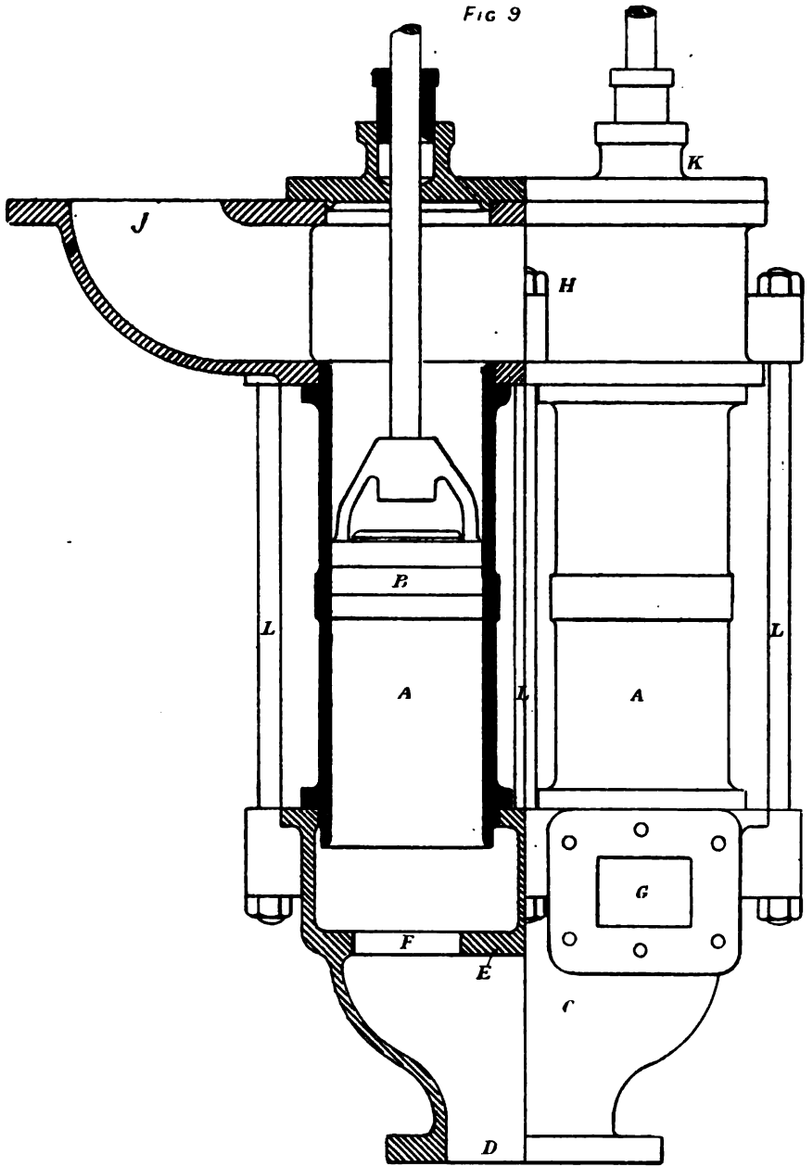

Fig 12.

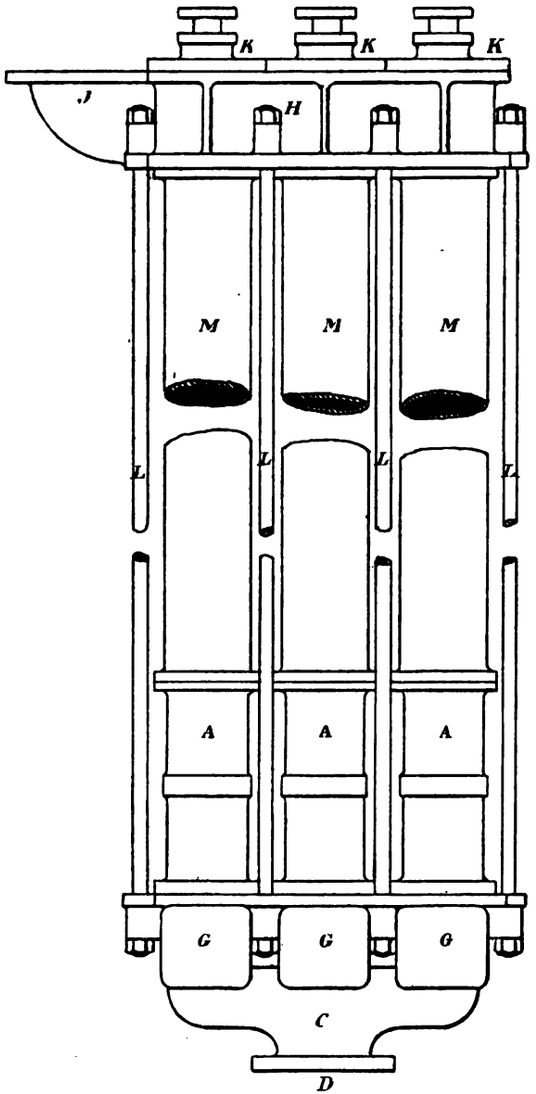

Plate III.

Fig 10.

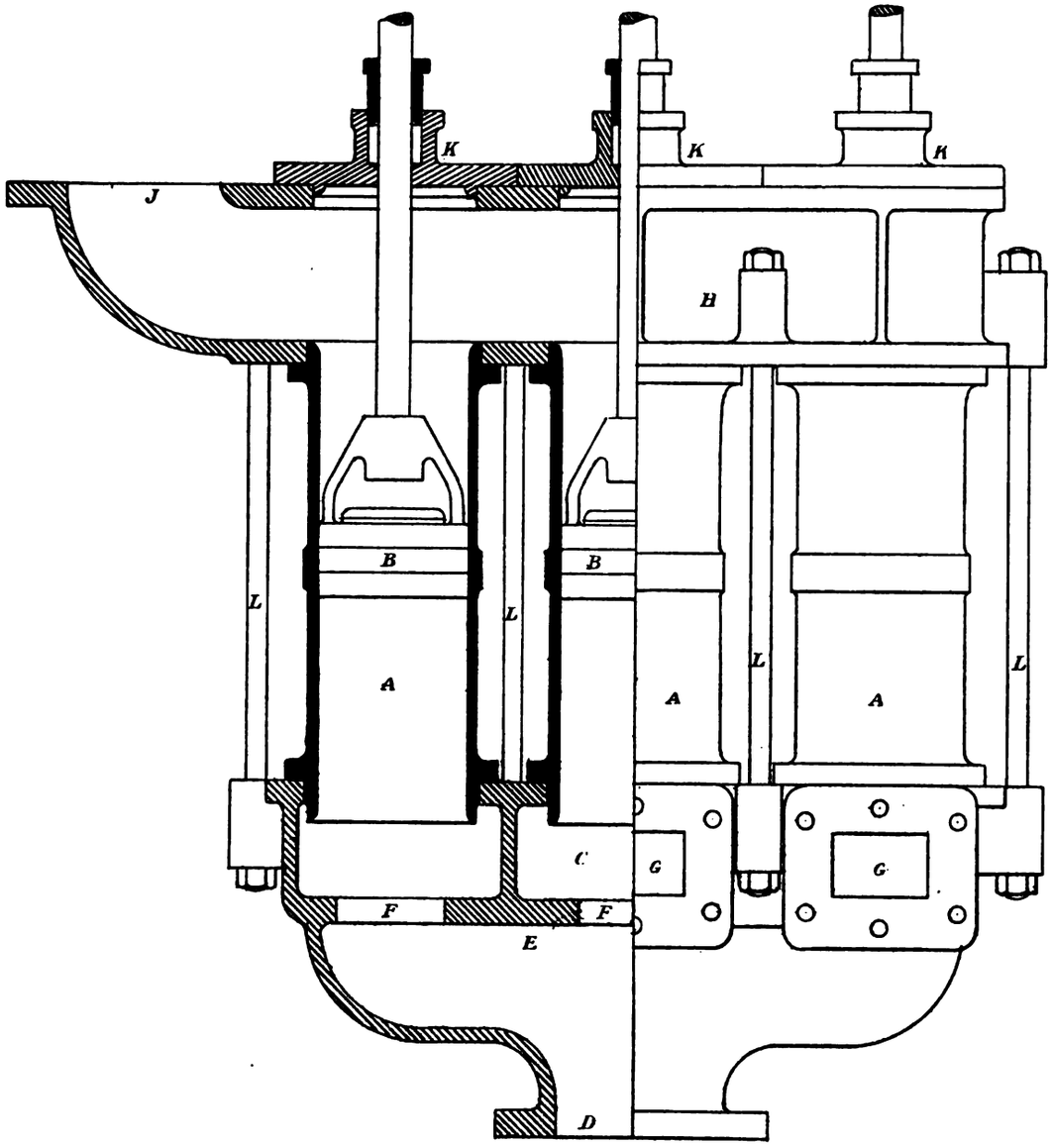

Fig 11

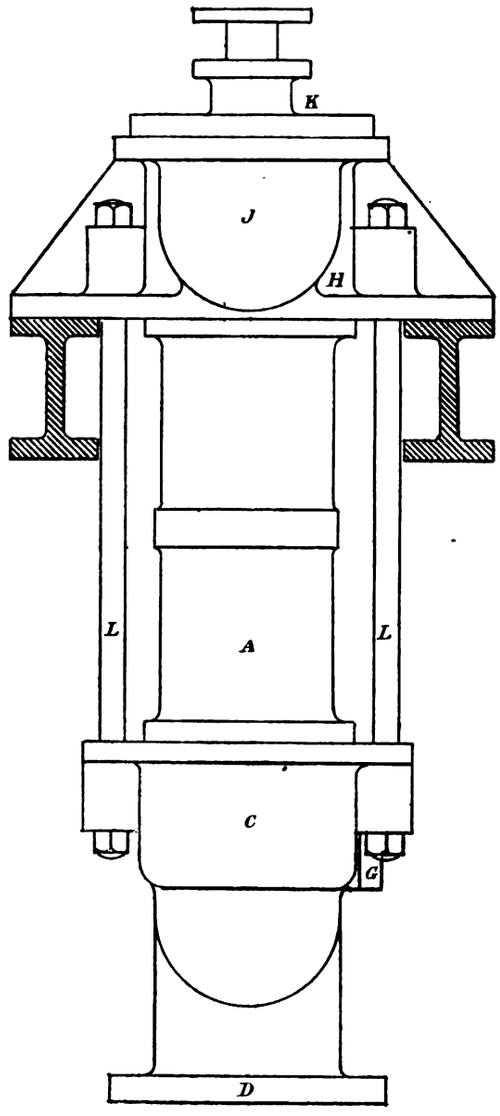

Plate IV.

Fig. 13.

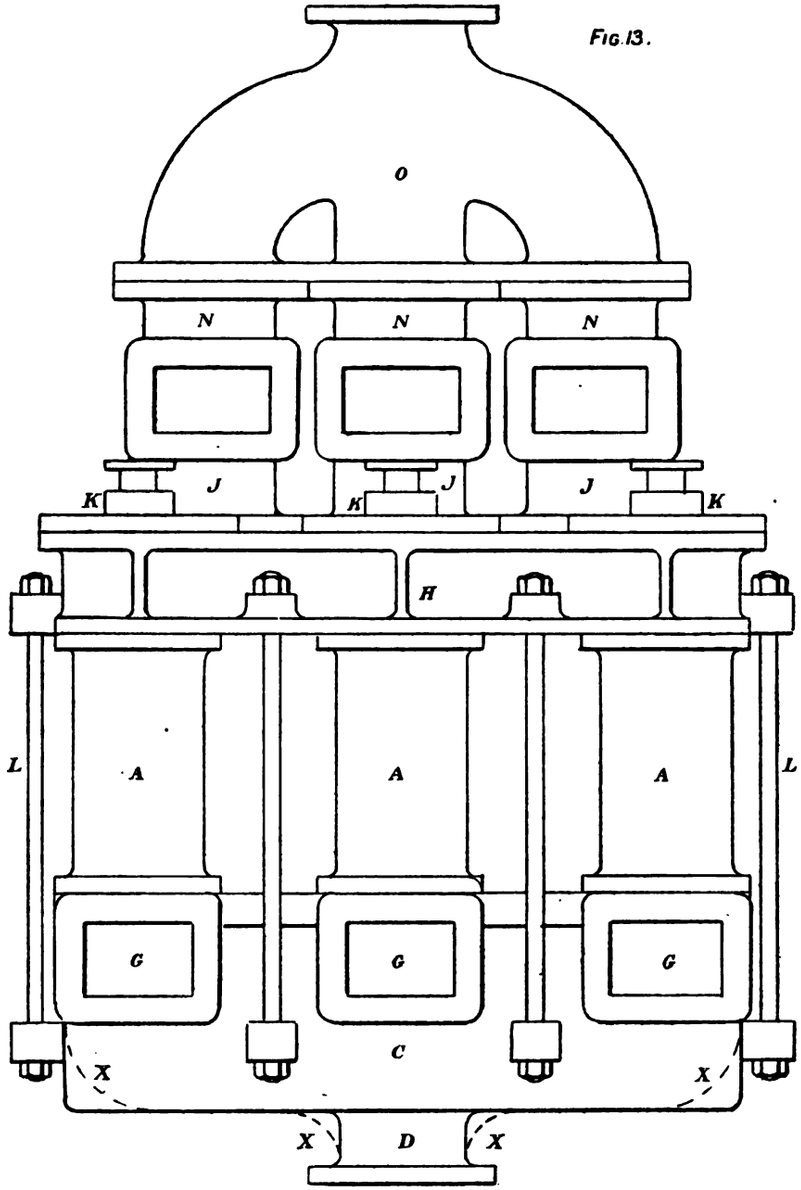

Fig 14

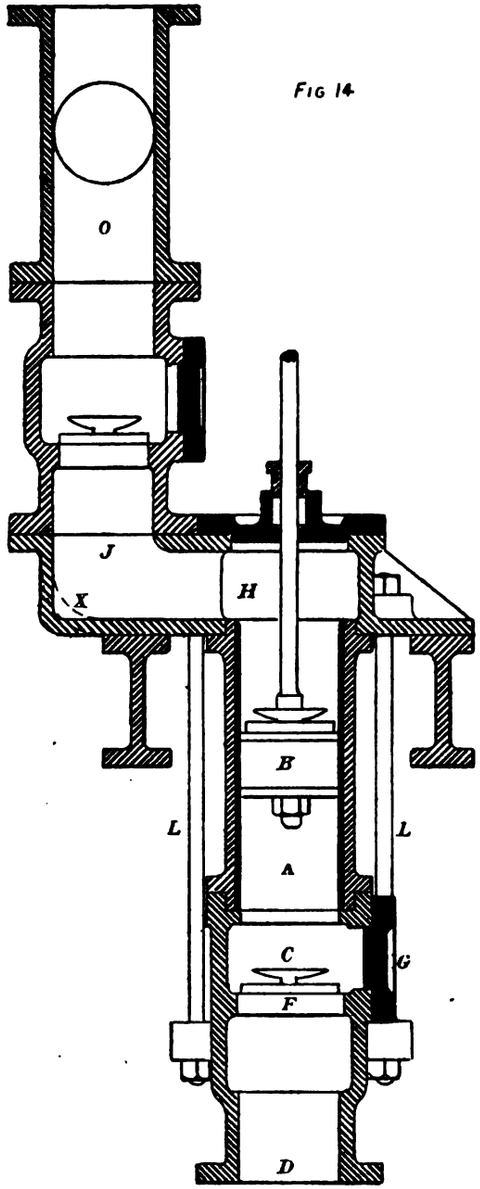

Plate V.

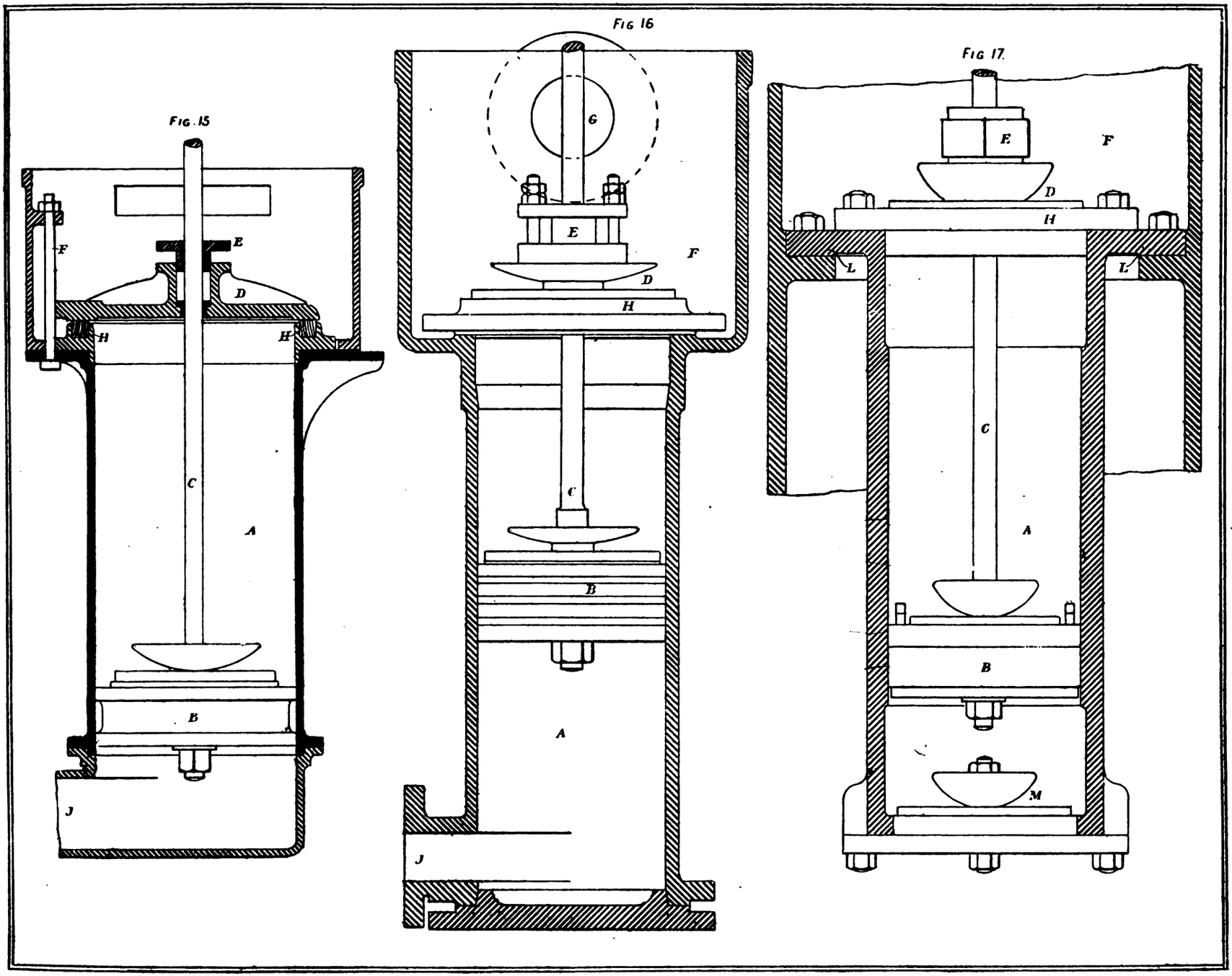

Plate VI

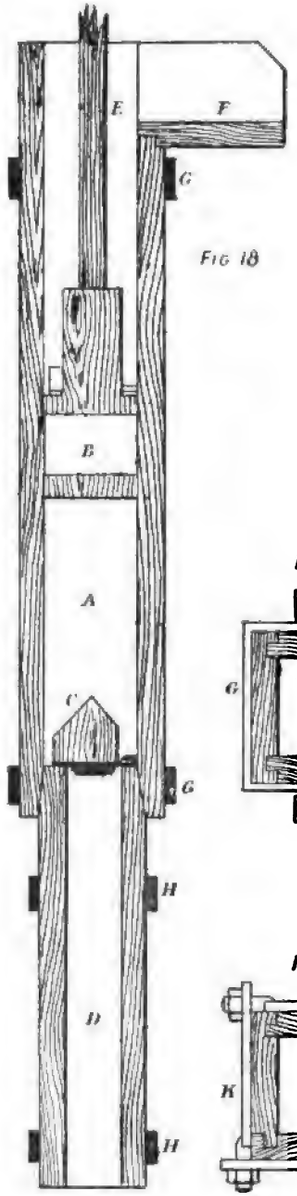

Fig 18

Fig.19

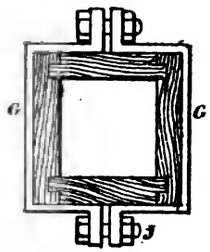

Fig 20.

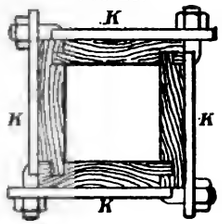

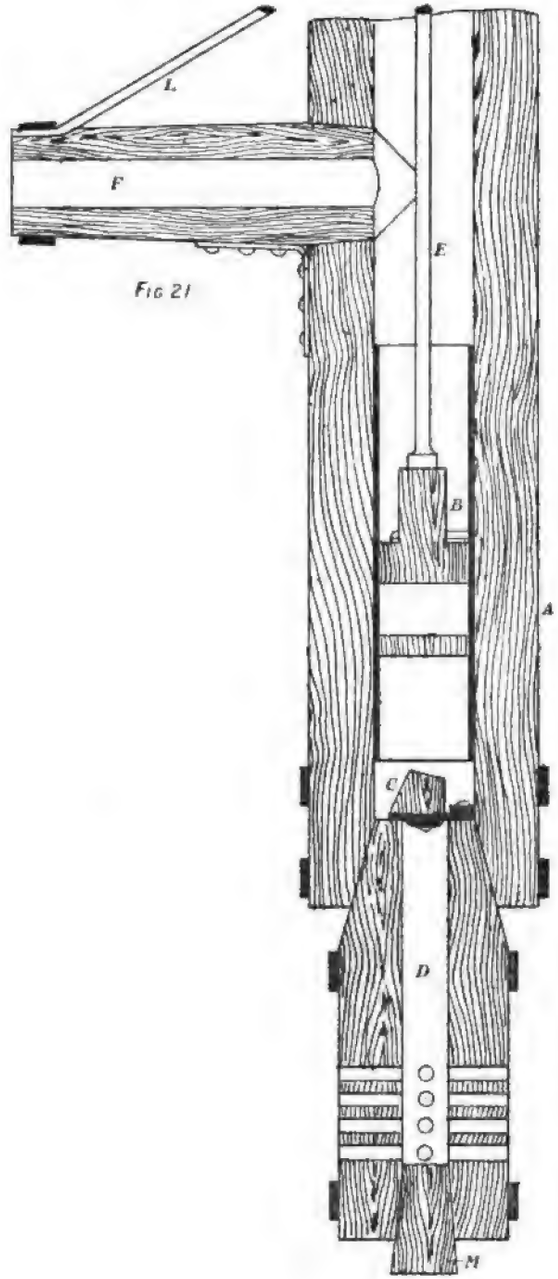

Fig 21

Fig 22

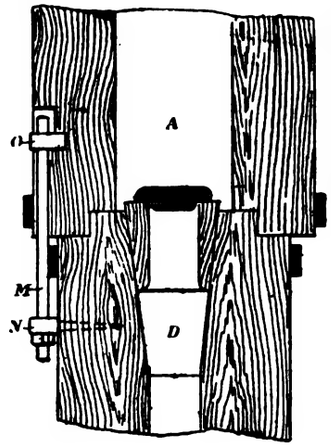

Fig.23

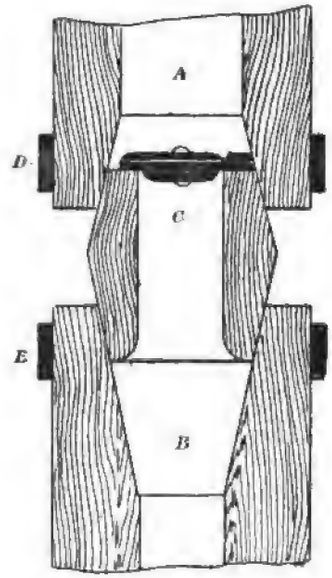

Plate VII.

Plate VIII.

Fig. 24

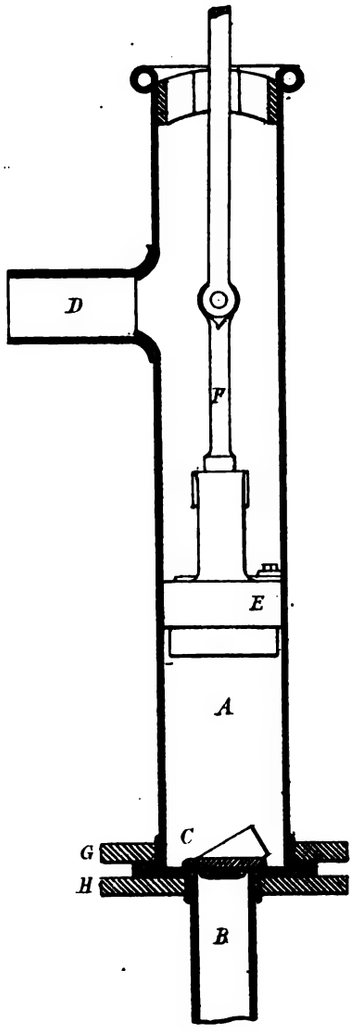

Fig 26

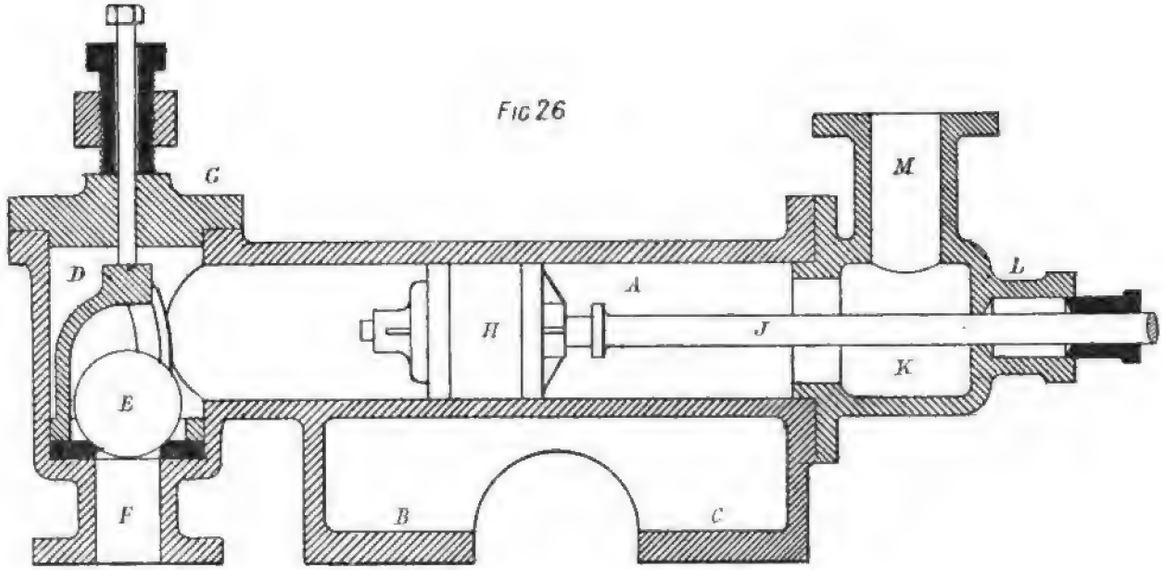

Fig. 27.

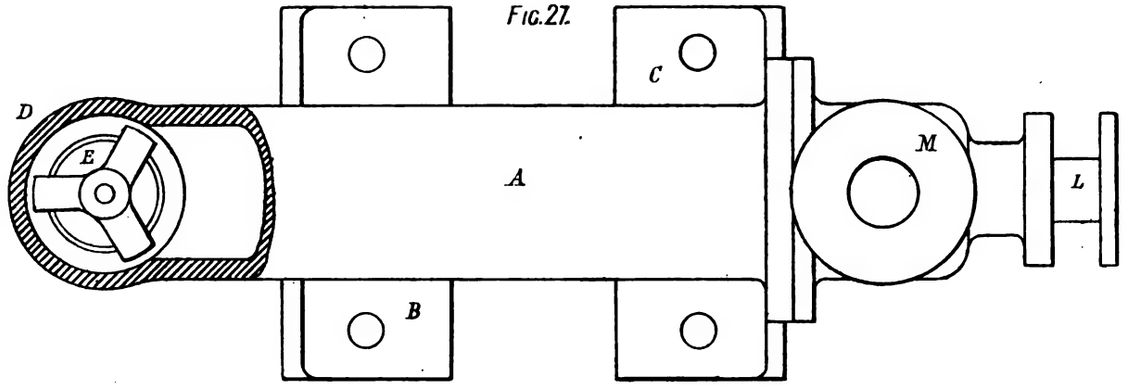

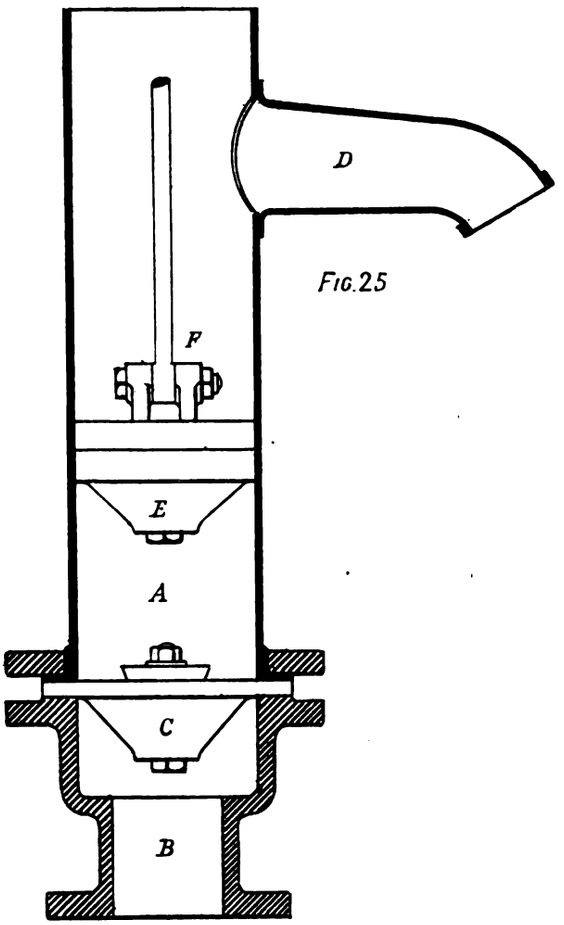

Fig. 25

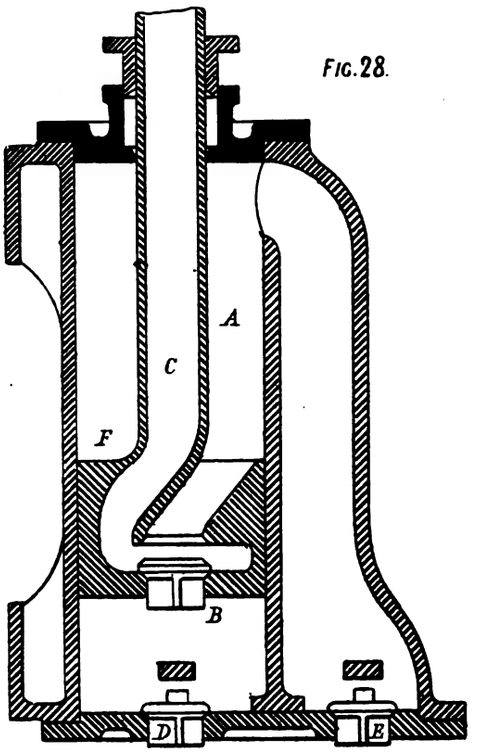

Fig. 28.

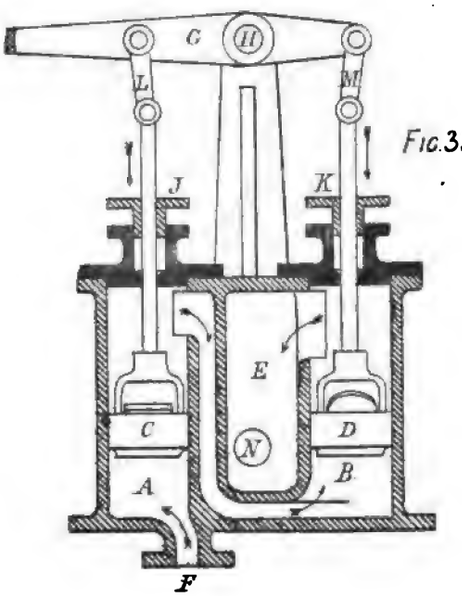

Fig. 33.

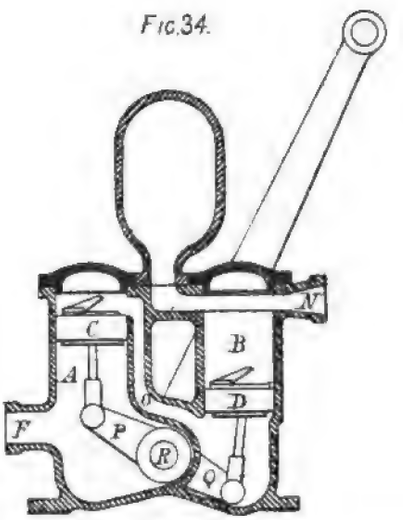

Fig. 34.

Fig. 29.

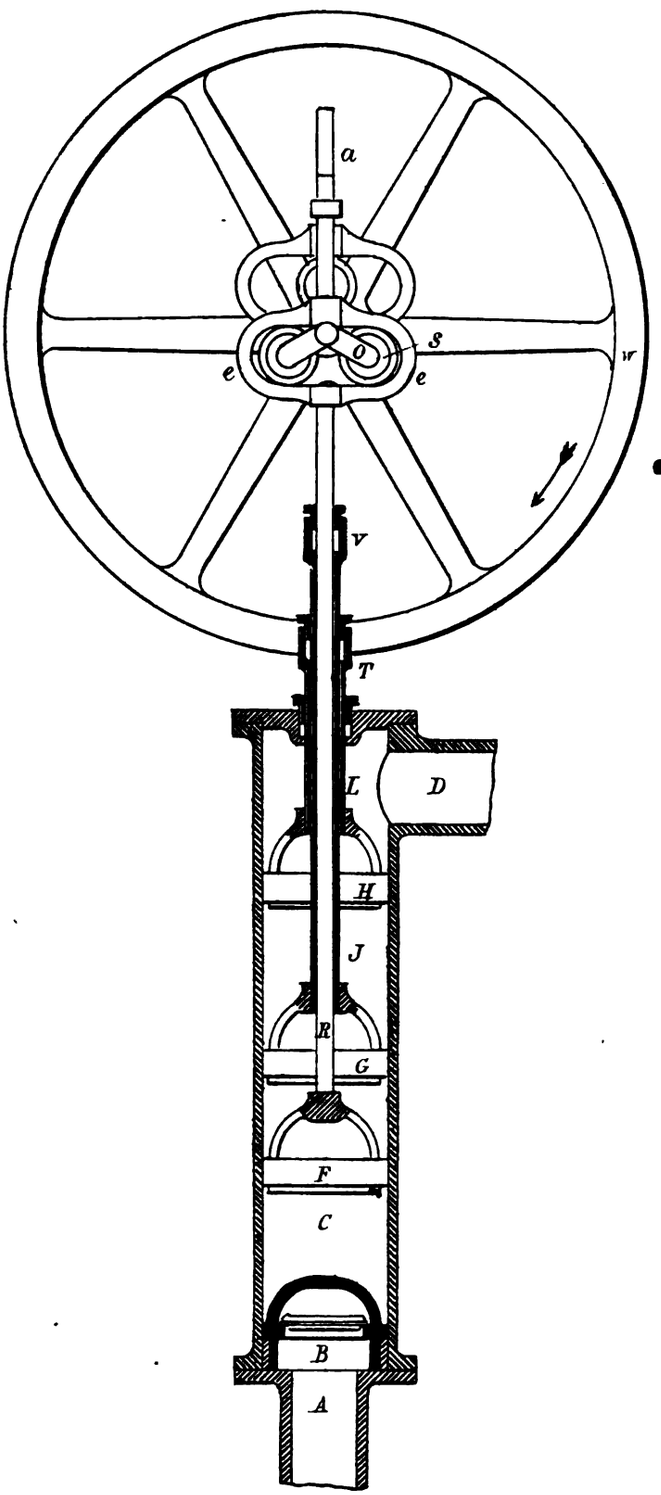

Fig. 30.

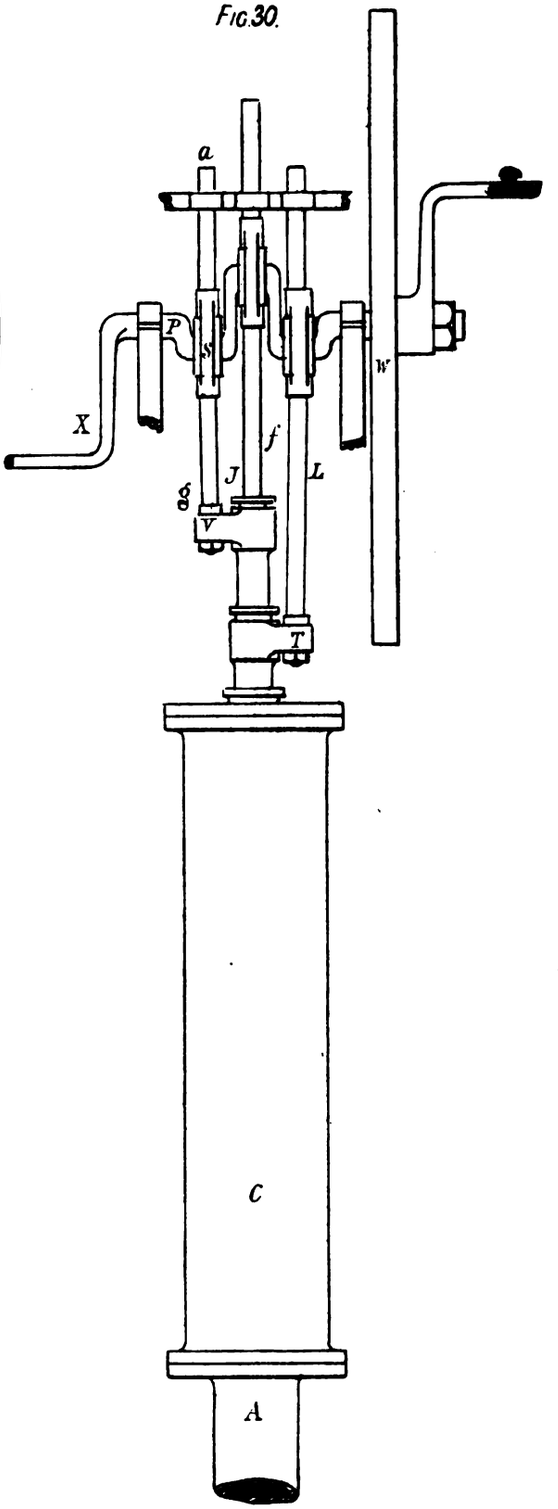

Fig. 31.

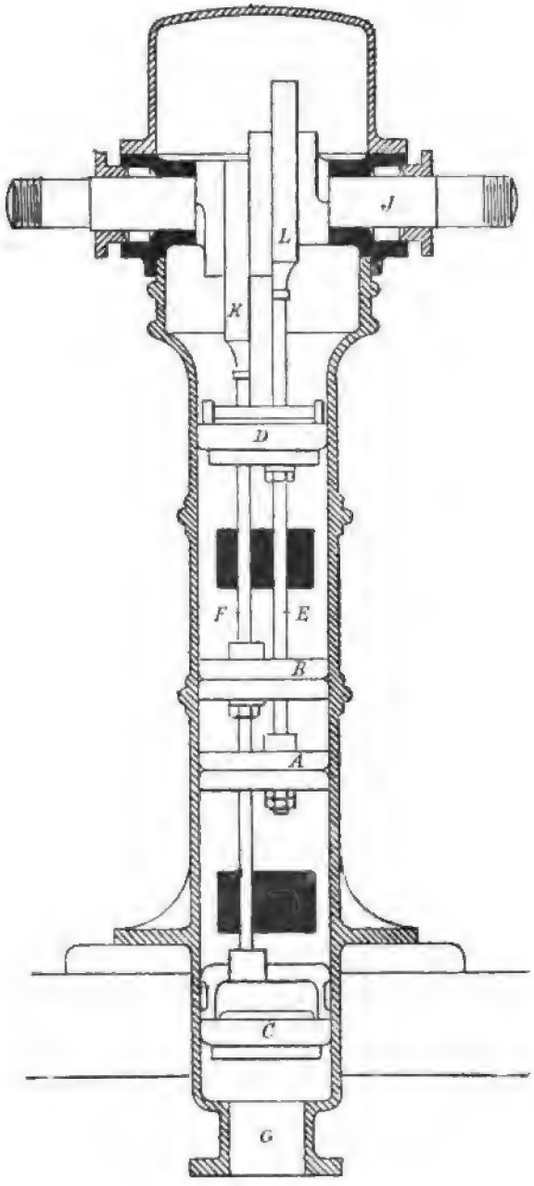

Fig. 32

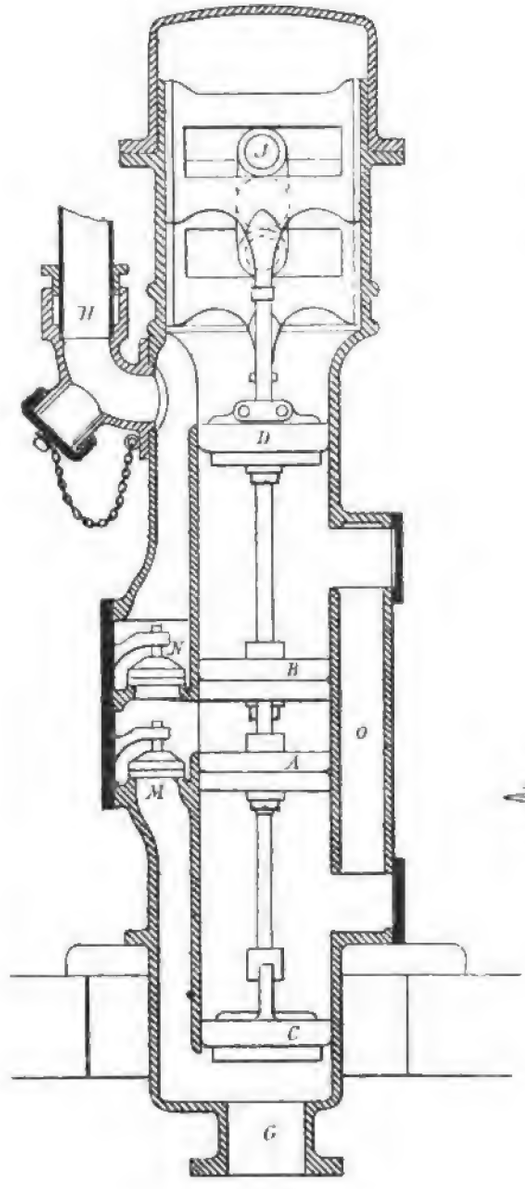

Fig 37

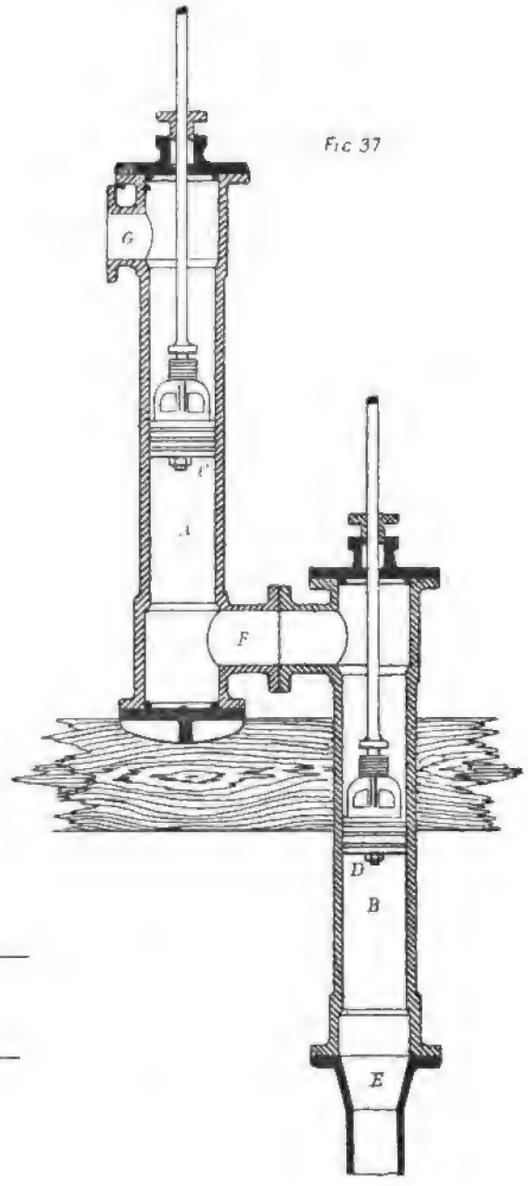

Plate XI.

Fig. 35

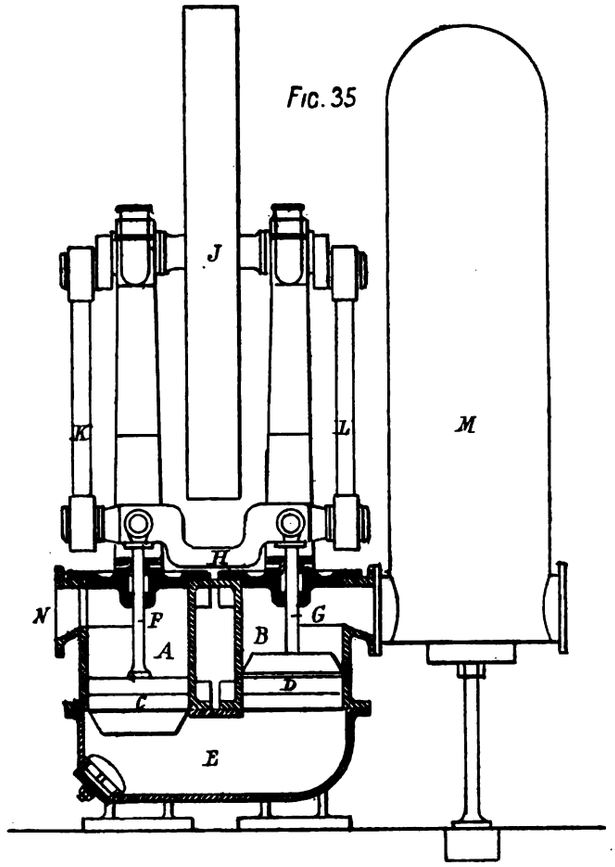

Fig. 36.

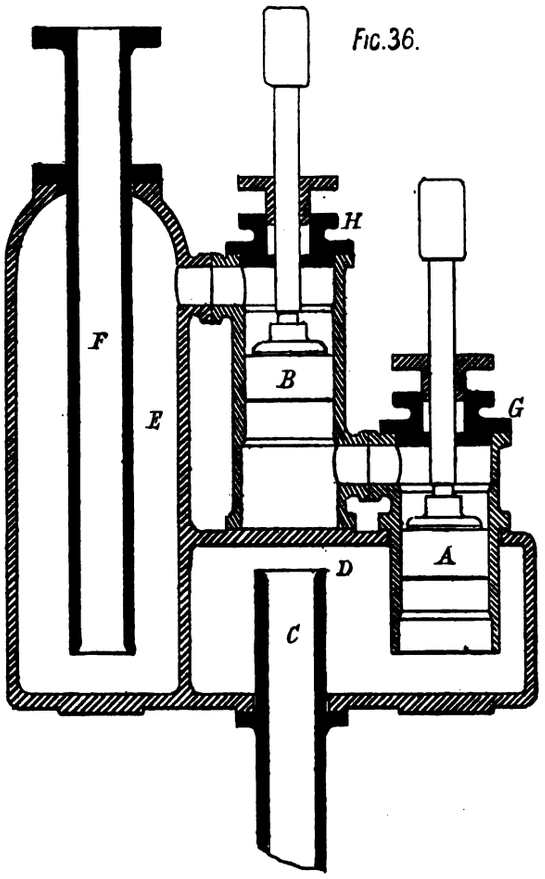

Fig. 39.

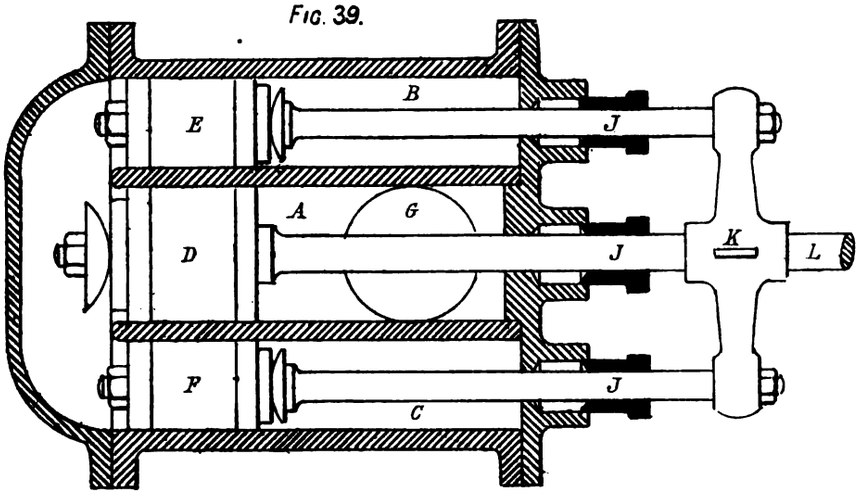

Fig. 40.

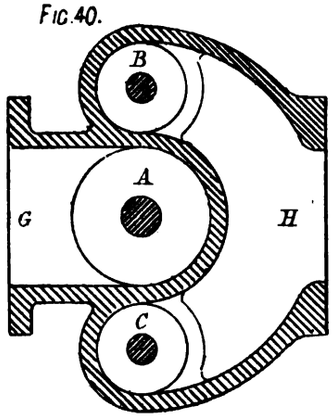

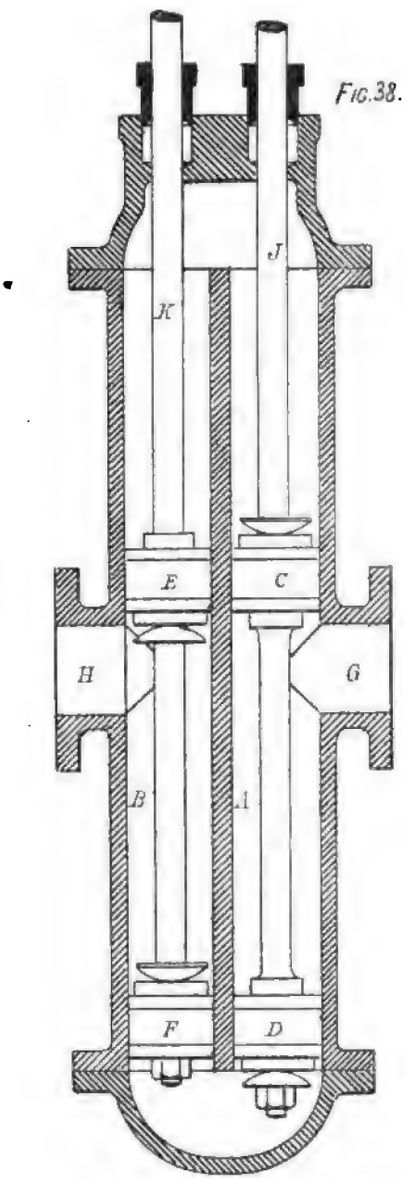

Fig. 38.

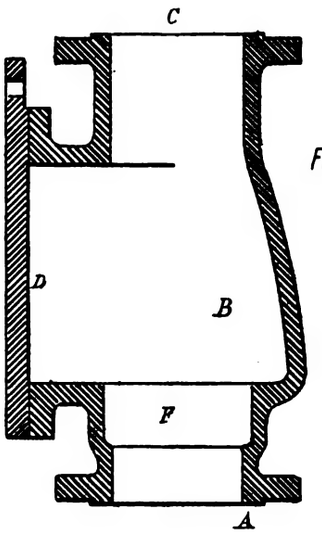

Fig. 42.

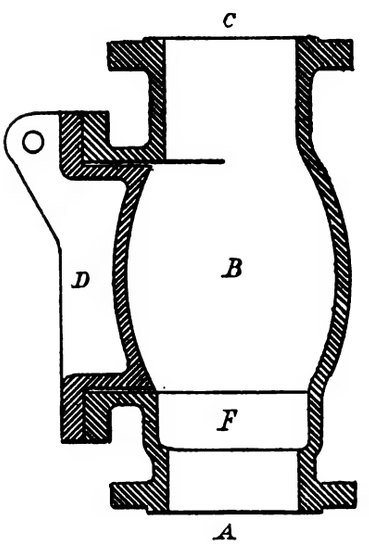

Fig. 43.

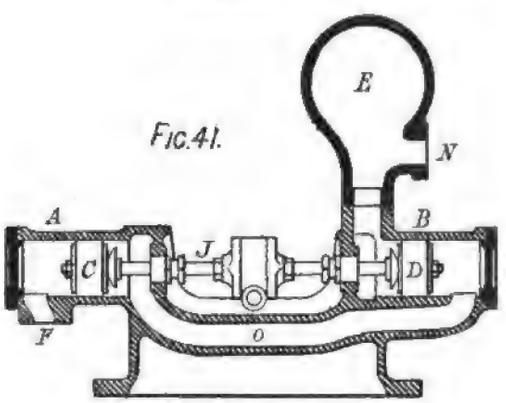

Fig. 41.

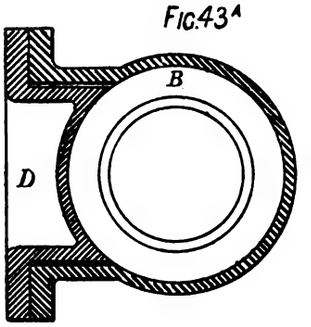

Fig. 43A

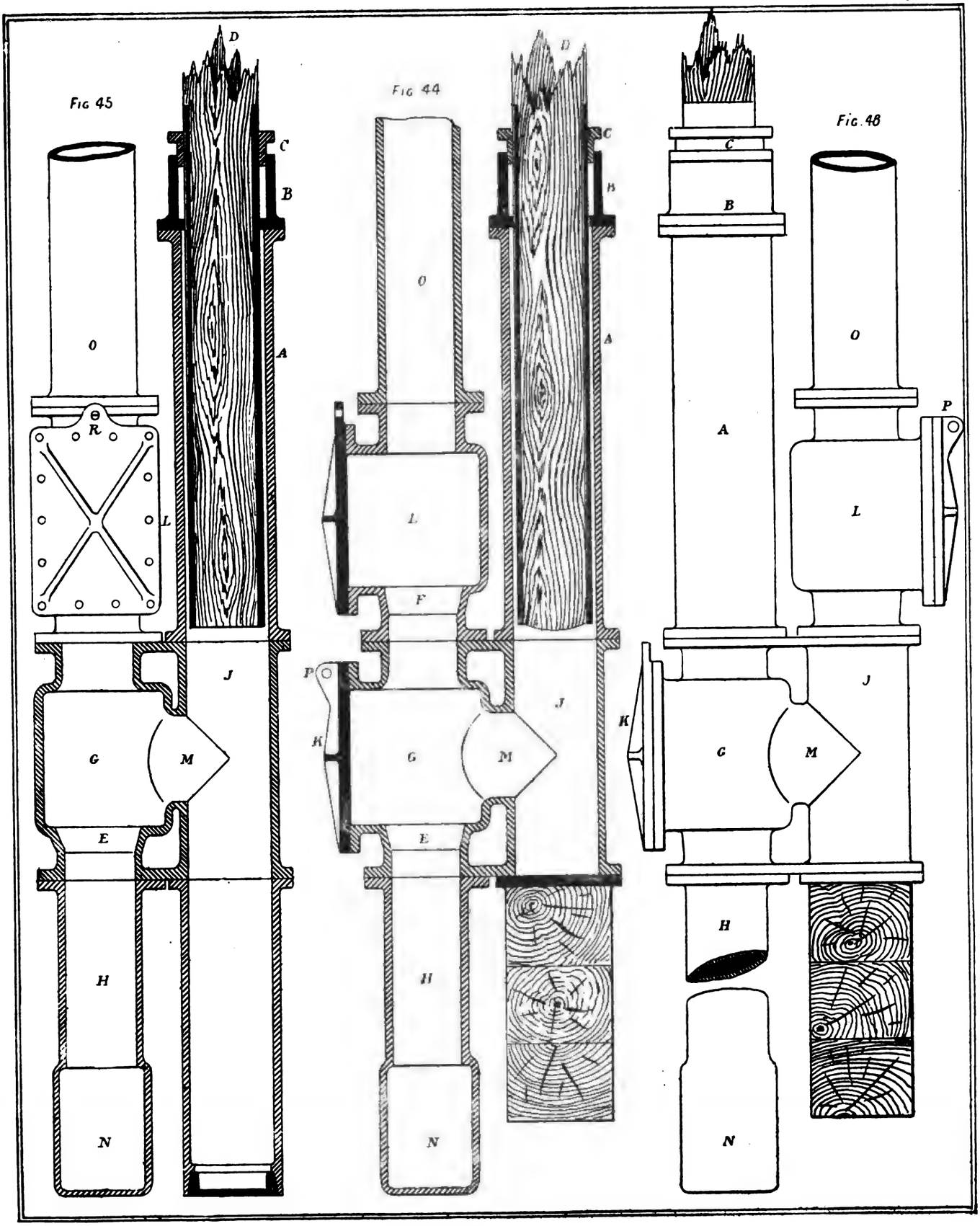
Fig 45
D
C
B
A
O
R
L
J
G
M
E
H
N
Fig 44
D
C
B
A
O
L
F
P
K
J
G
M
E
H
N
Fig. 48
C
B
A
O
P
L
J
K
G
M
H
N

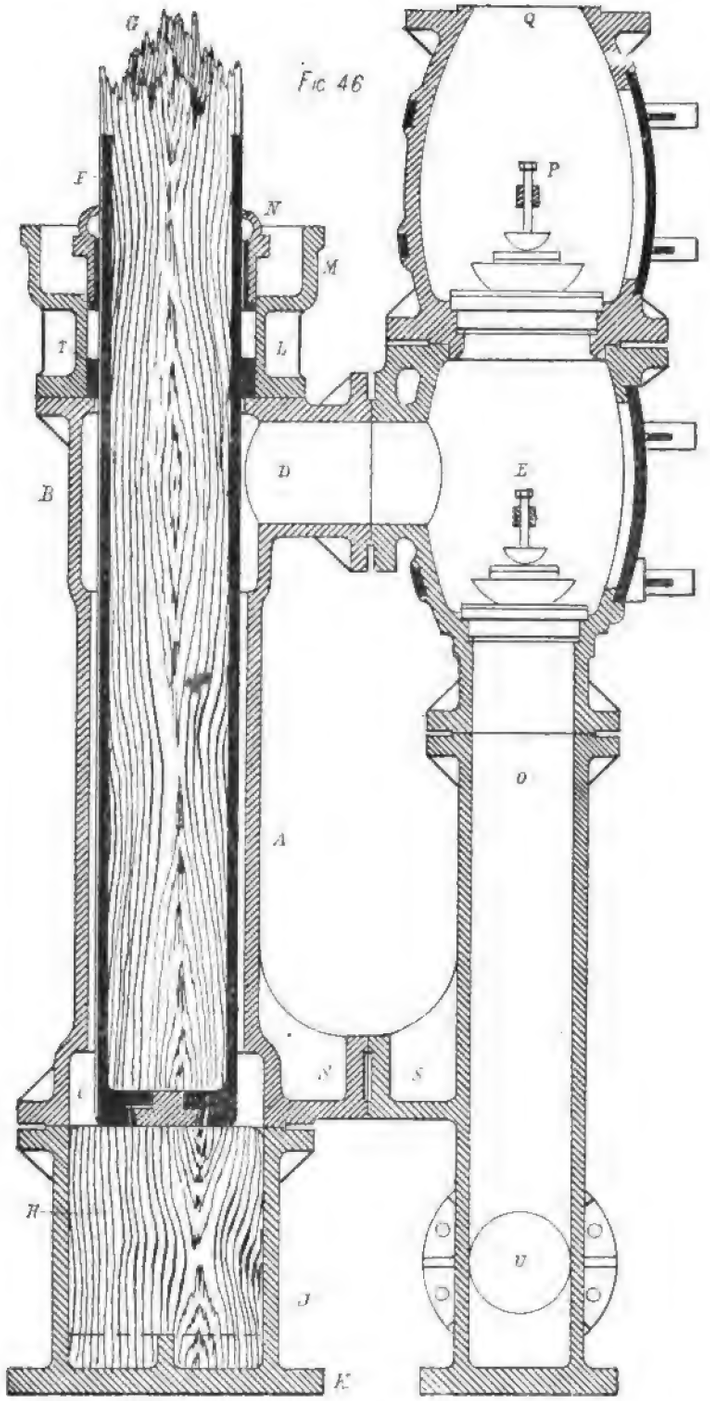

Fig. 46

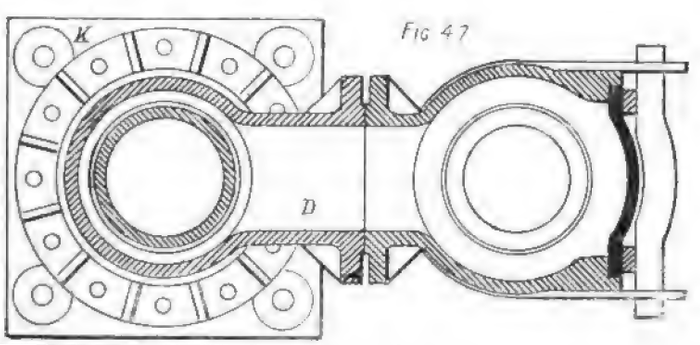

Fig. 47

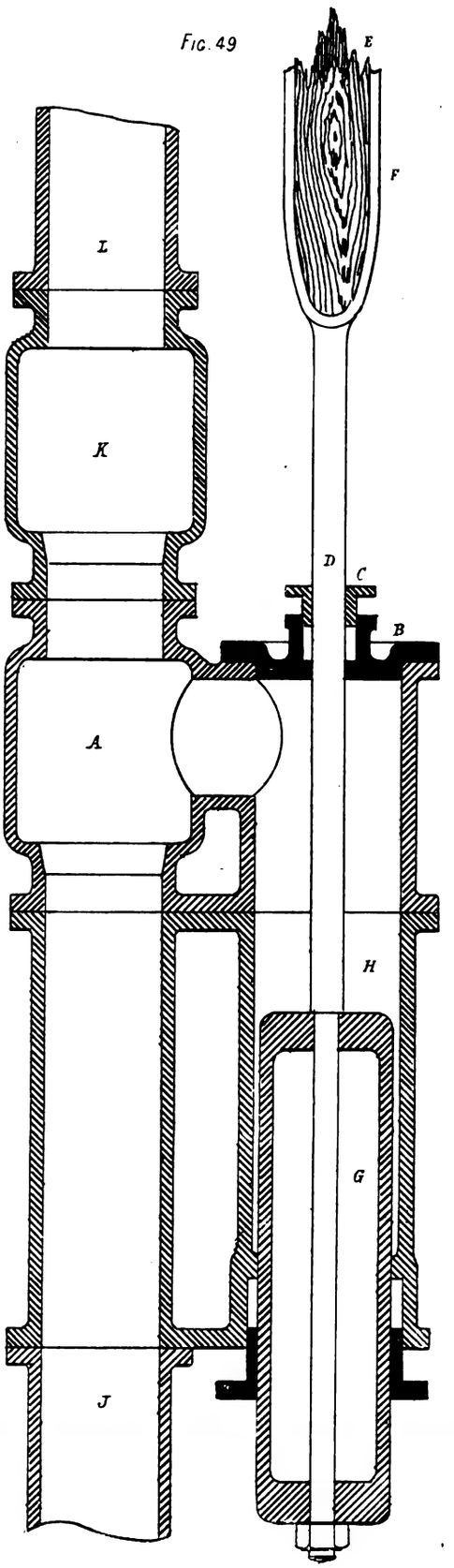

Fig. 49

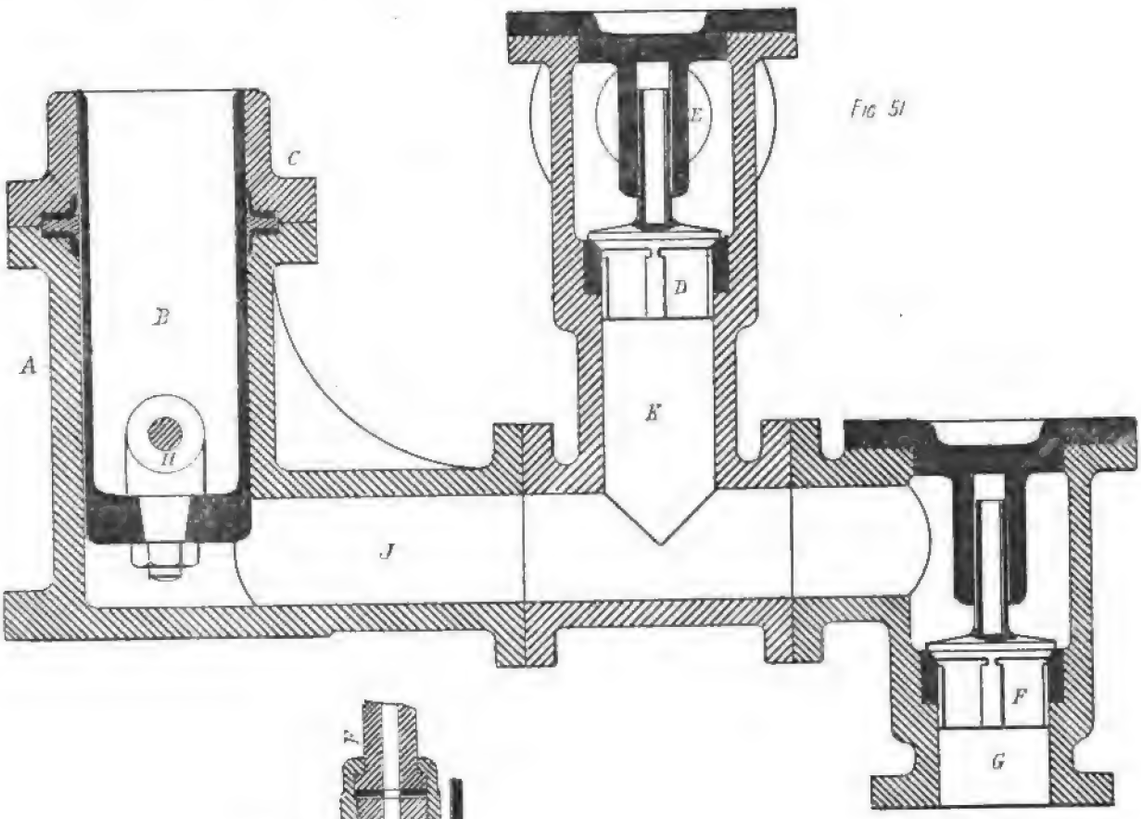

Fig 51

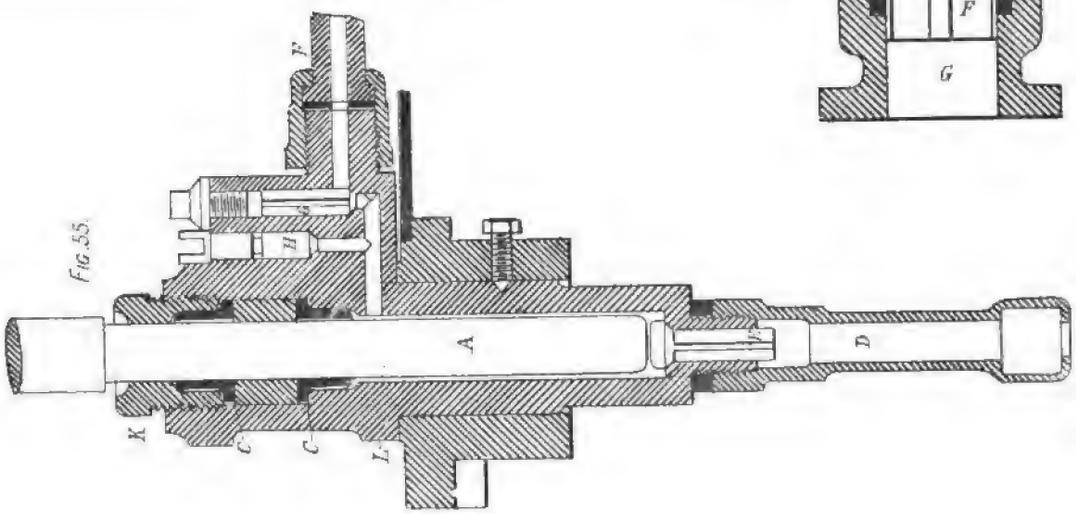

Fig. 55.

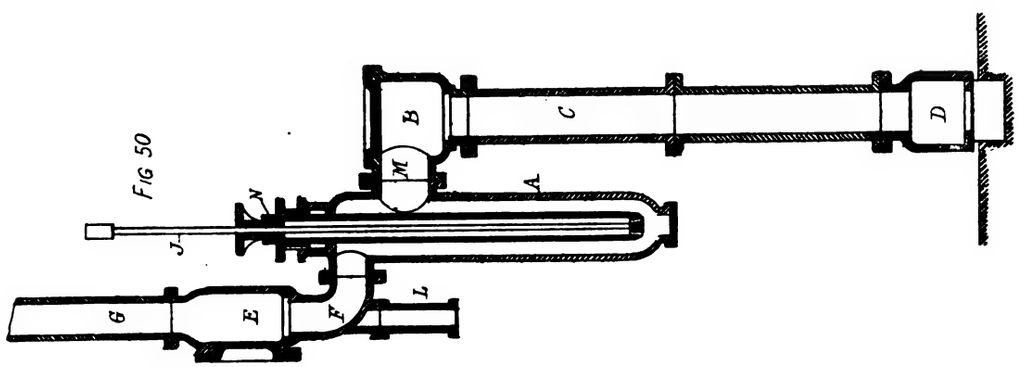

Fig 50

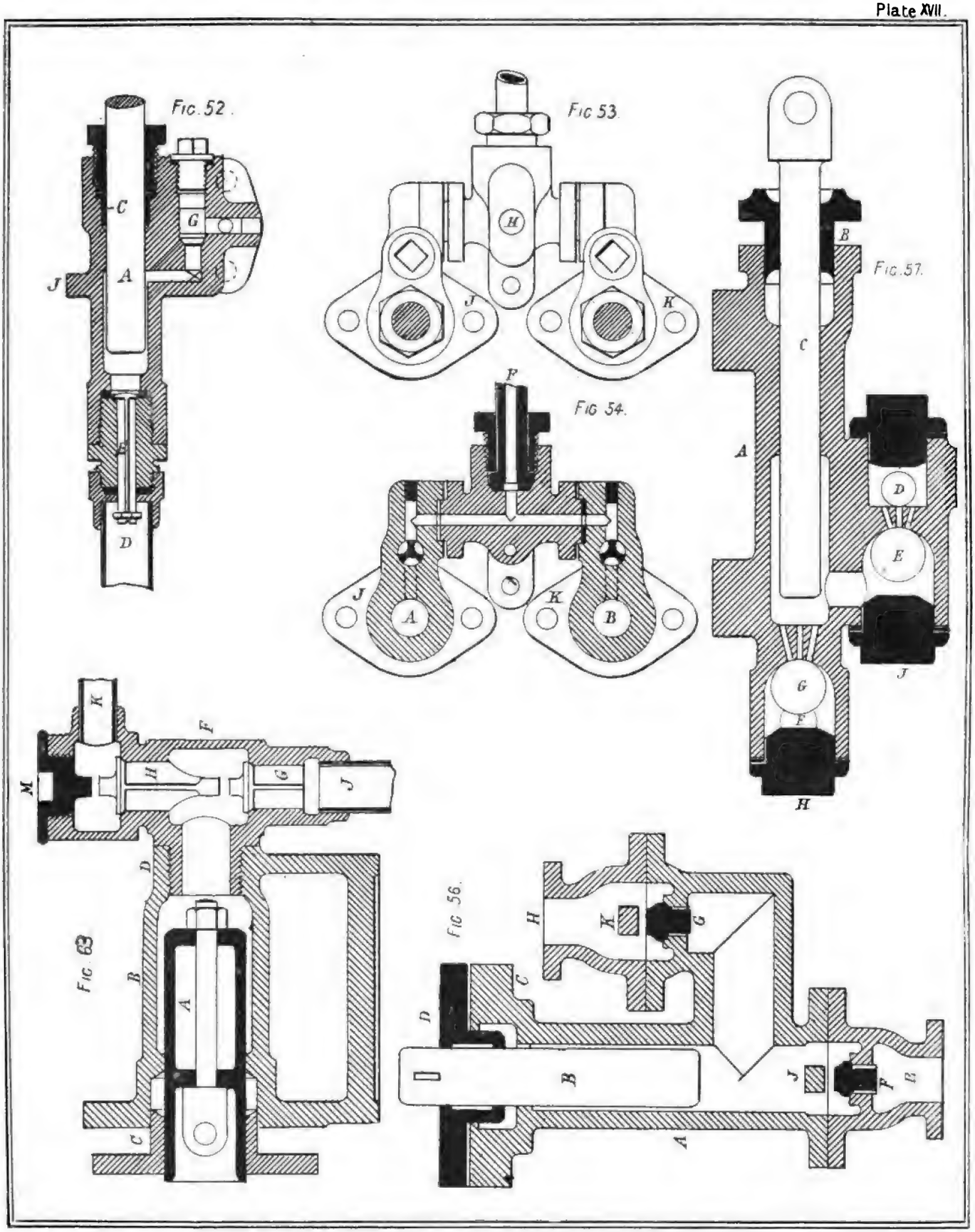
Fig. 52.
C
G
J
A
B
D
Fig 53.
H
J
K
F
Fig 54.
J
A
K
B
Fig. 57.
B
C
A
D
E
J
G
F
H
K
F
M
H
G
J
D
B
A
C
Fig 63
Fig 56.
H
K
G
C
D
B
J
F
E
A

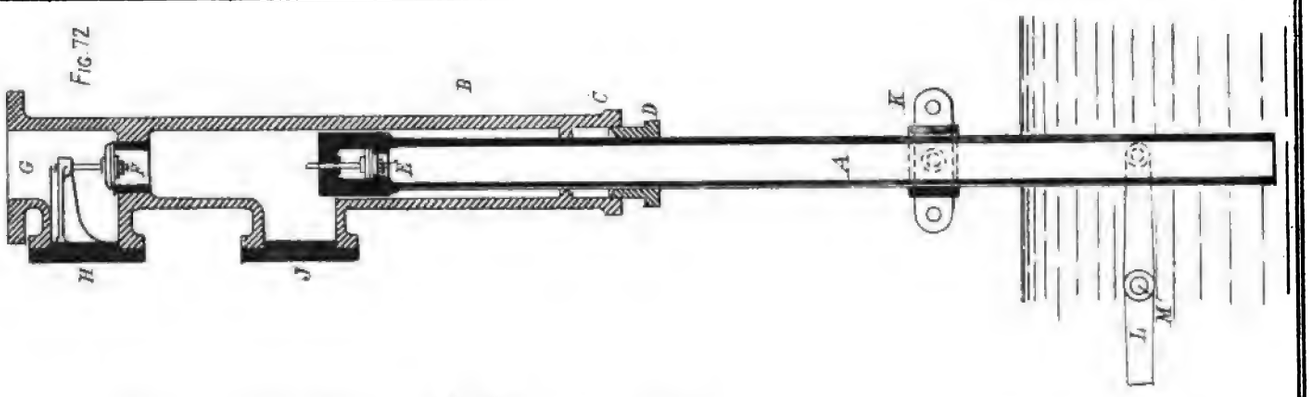
Fig. 72.
B
C
D
K
G
A
H
J
L
M

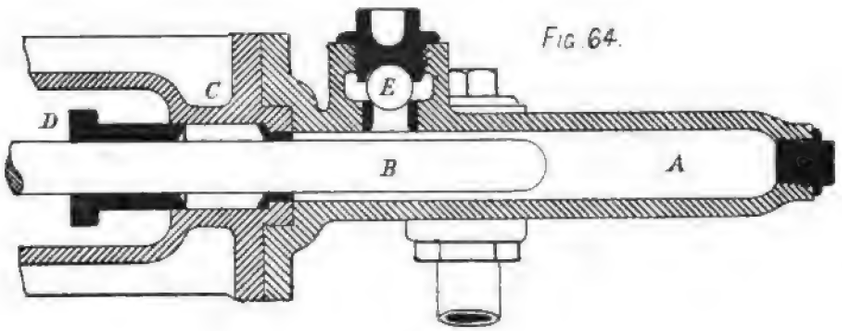
Fig. 64.
C
E
D
B
A

Fig. 65.
G
F

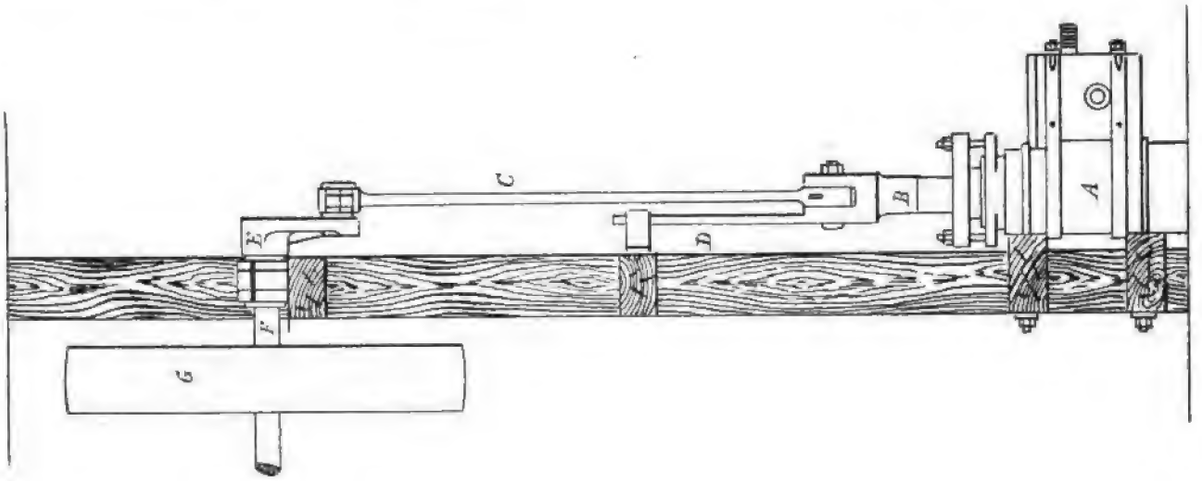
Fig. 59.
C
B
A
D
E
F
G

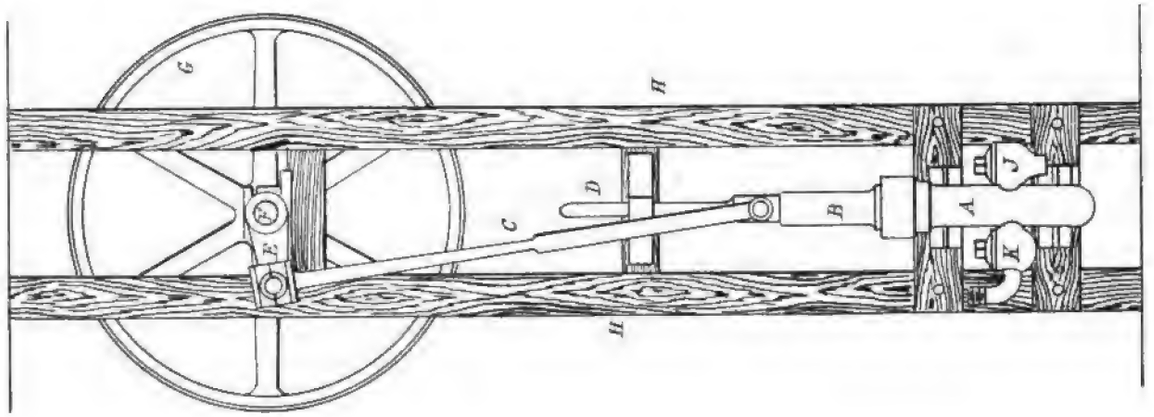
Fig. 58.
G
H
D
C
B
A
J
K
E
F
H

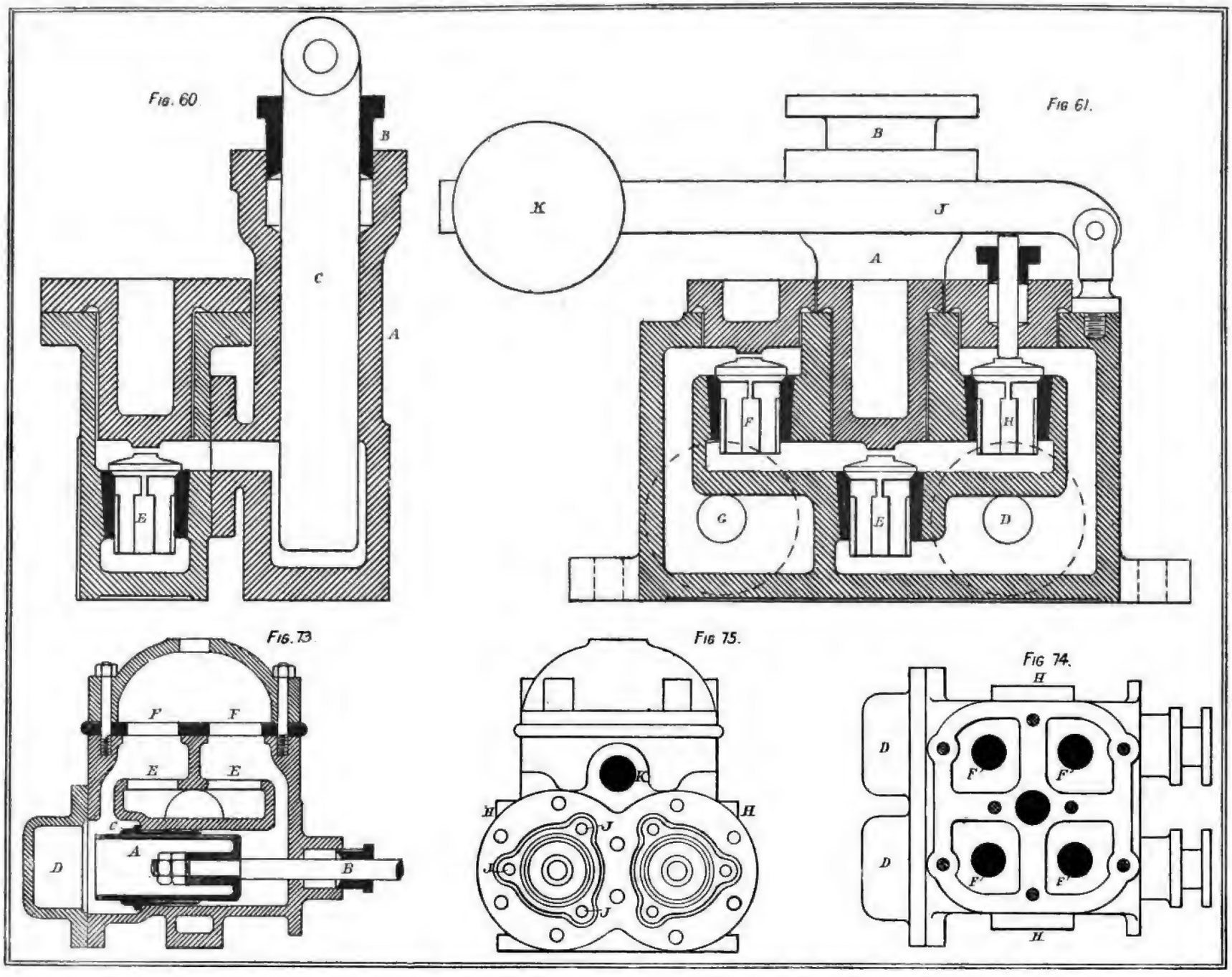
Fig. 60.
B
C
A
E
Fig 61.
B
K
J
A
F
H
G
E
D
Fig. 73.
F
F
E
E
C
A
D
B
Fig 75.
K
H
H
J
J
J
Fig 74.
H
D
D
F'
F'
F'
F'
H

Plate XIX

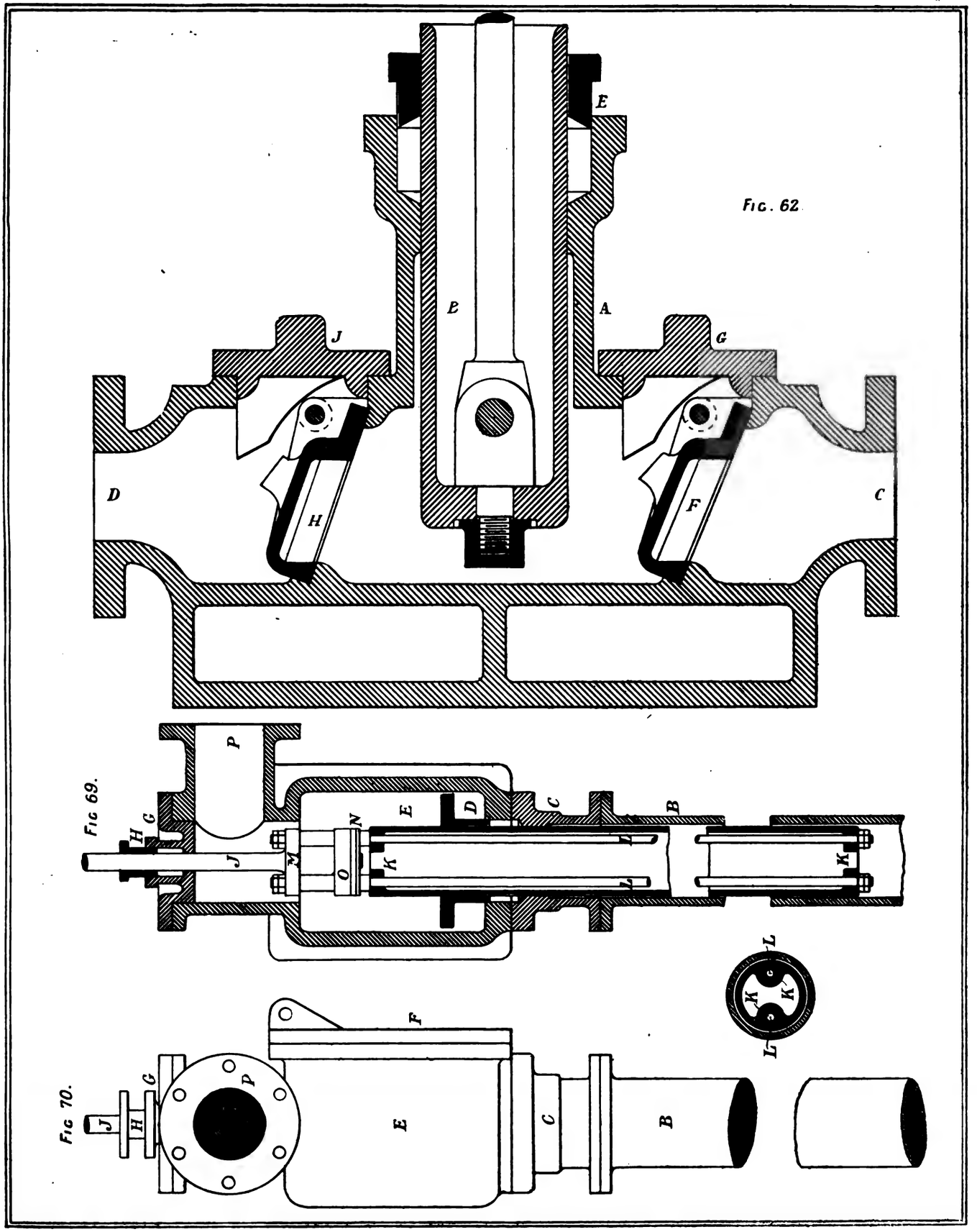

Fig. 62.

Fig 69.

Fig 70.

Fig. 79

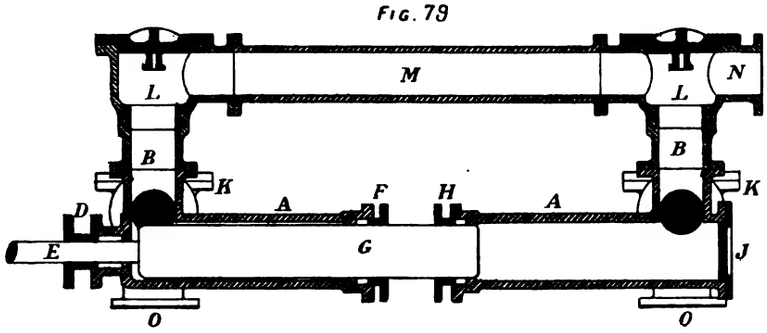

Fig. 80

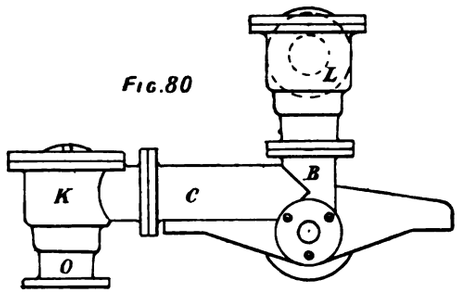

Fig. 68.

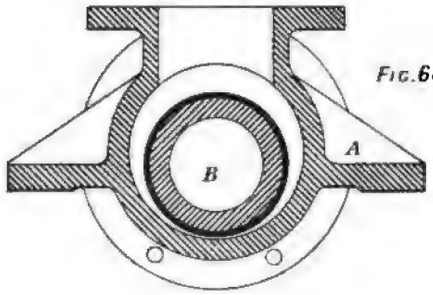

Fig. 66.

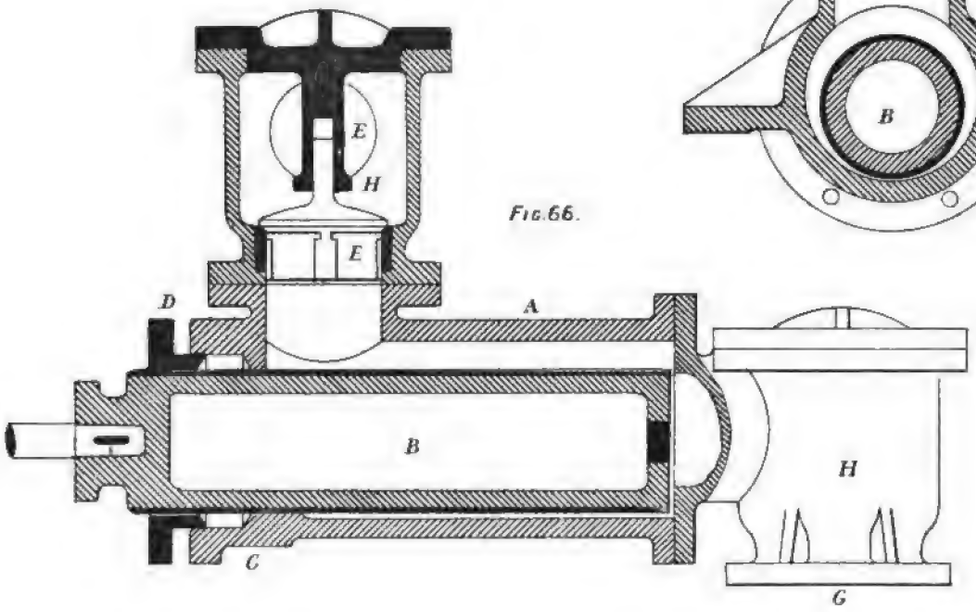

Fig 67.

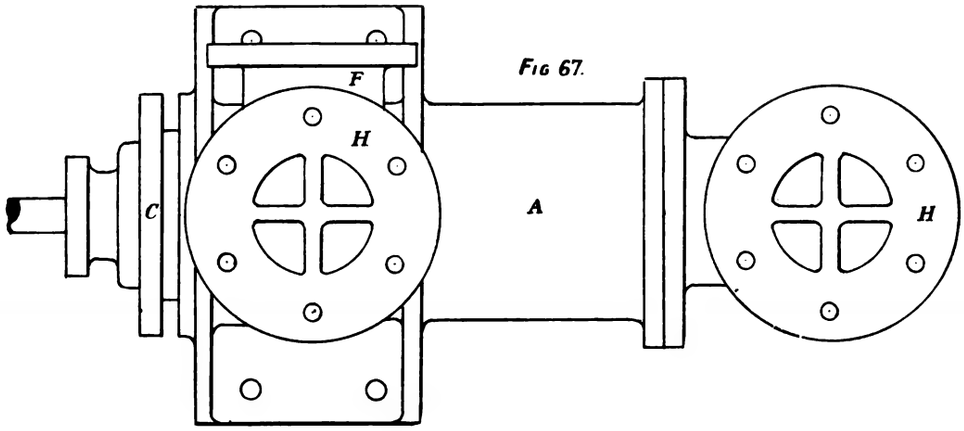

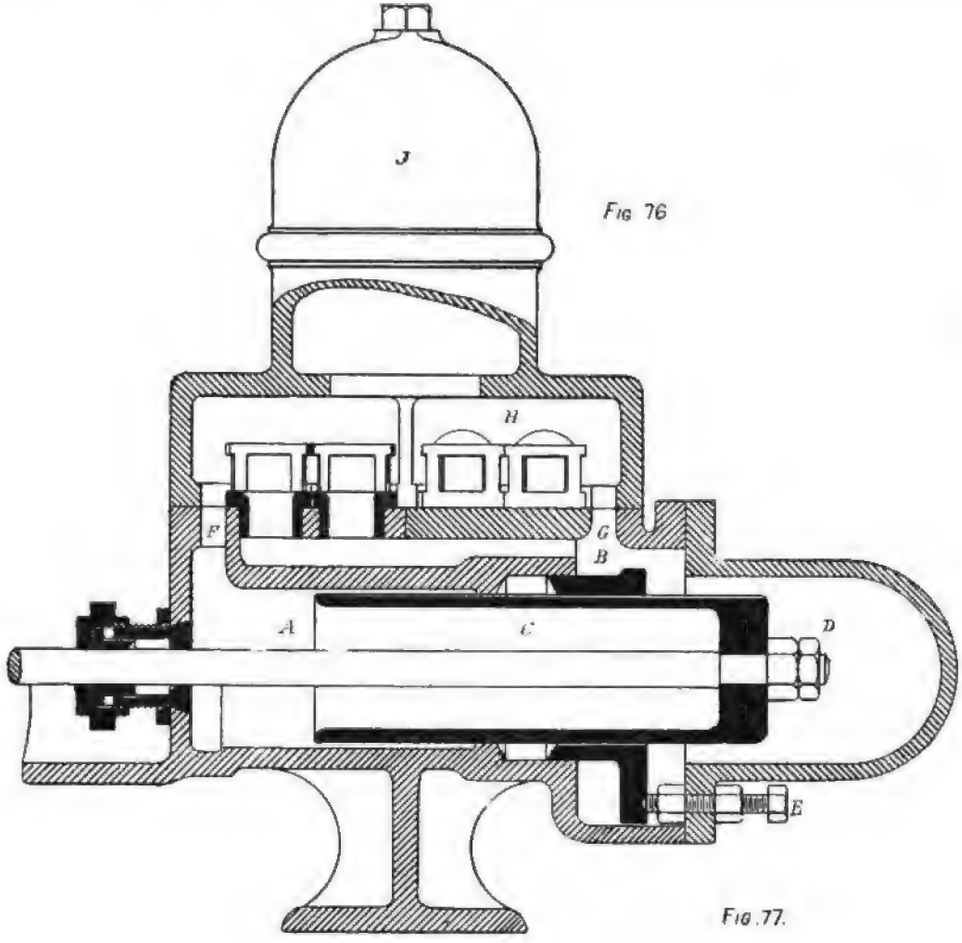

Fig 76

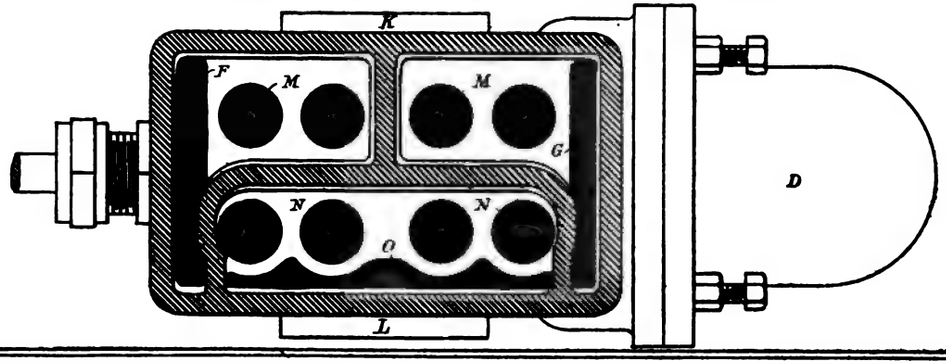

Fig. 77.

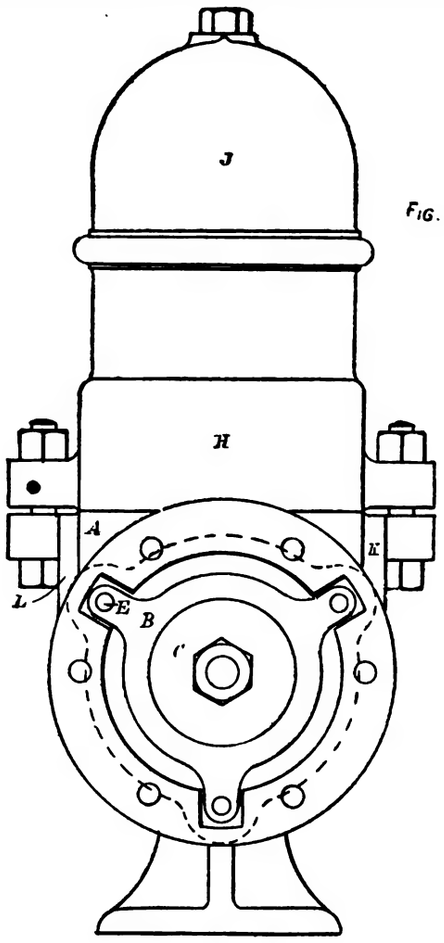

Fig. 78.

Plate XXII.

Fig 81

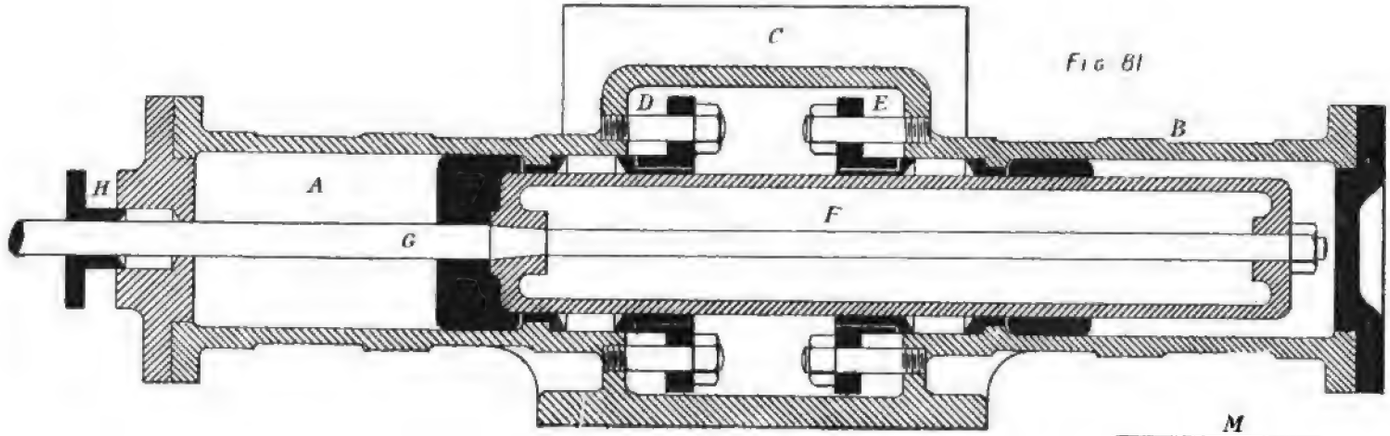

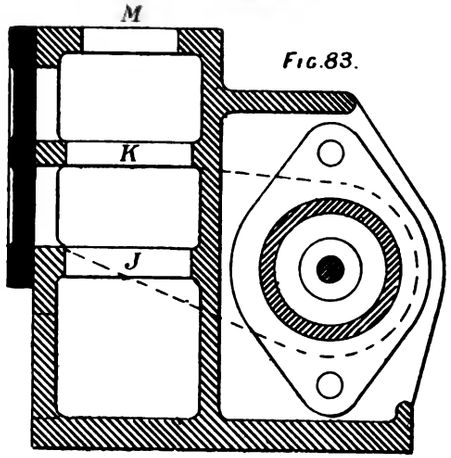

Fig.83.

Fig 82

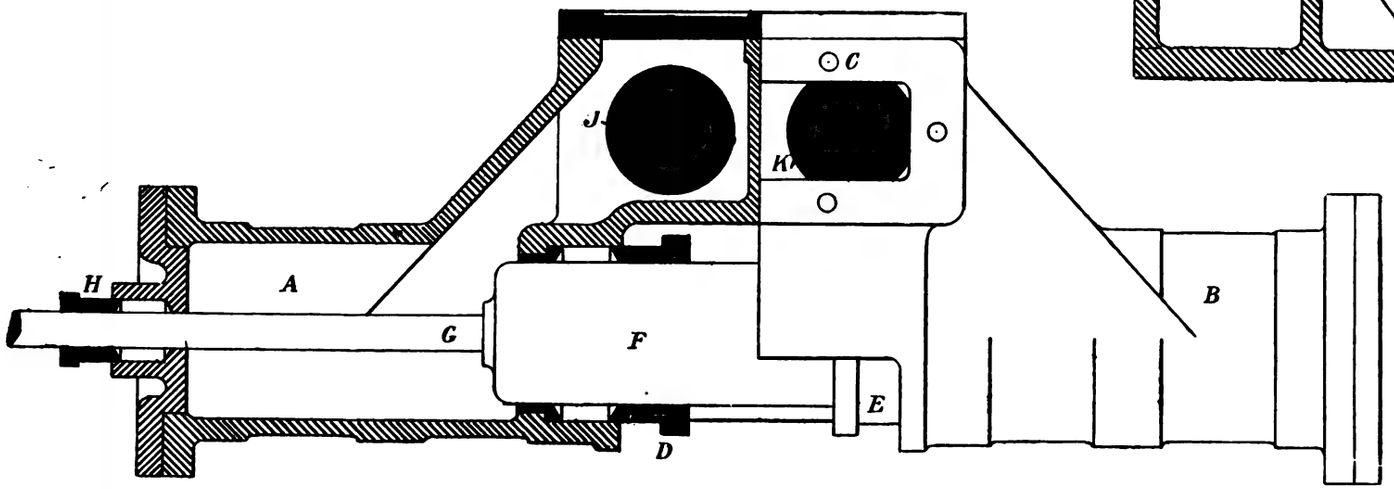

Plate XXIII.

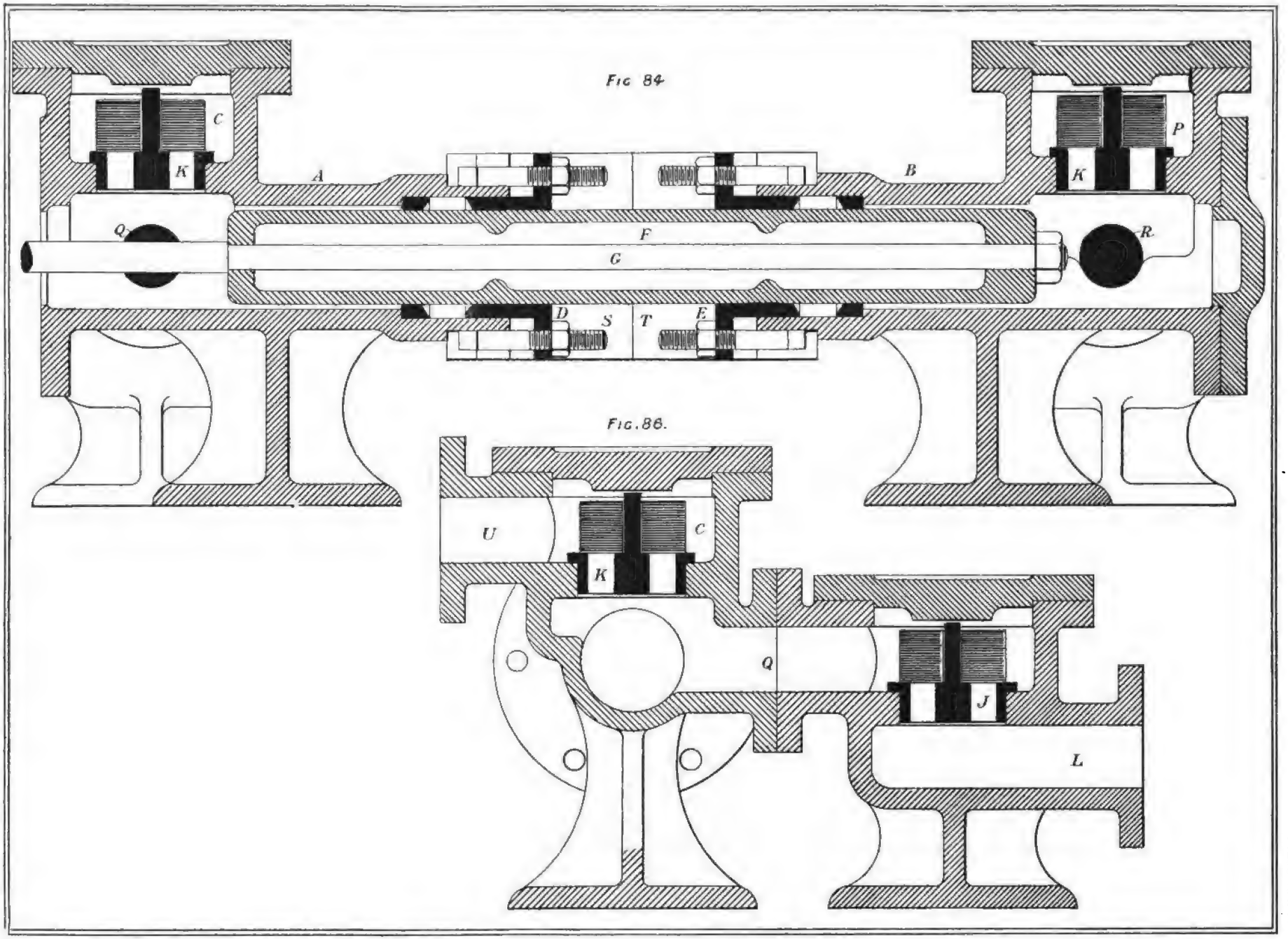

Plate XXIV.

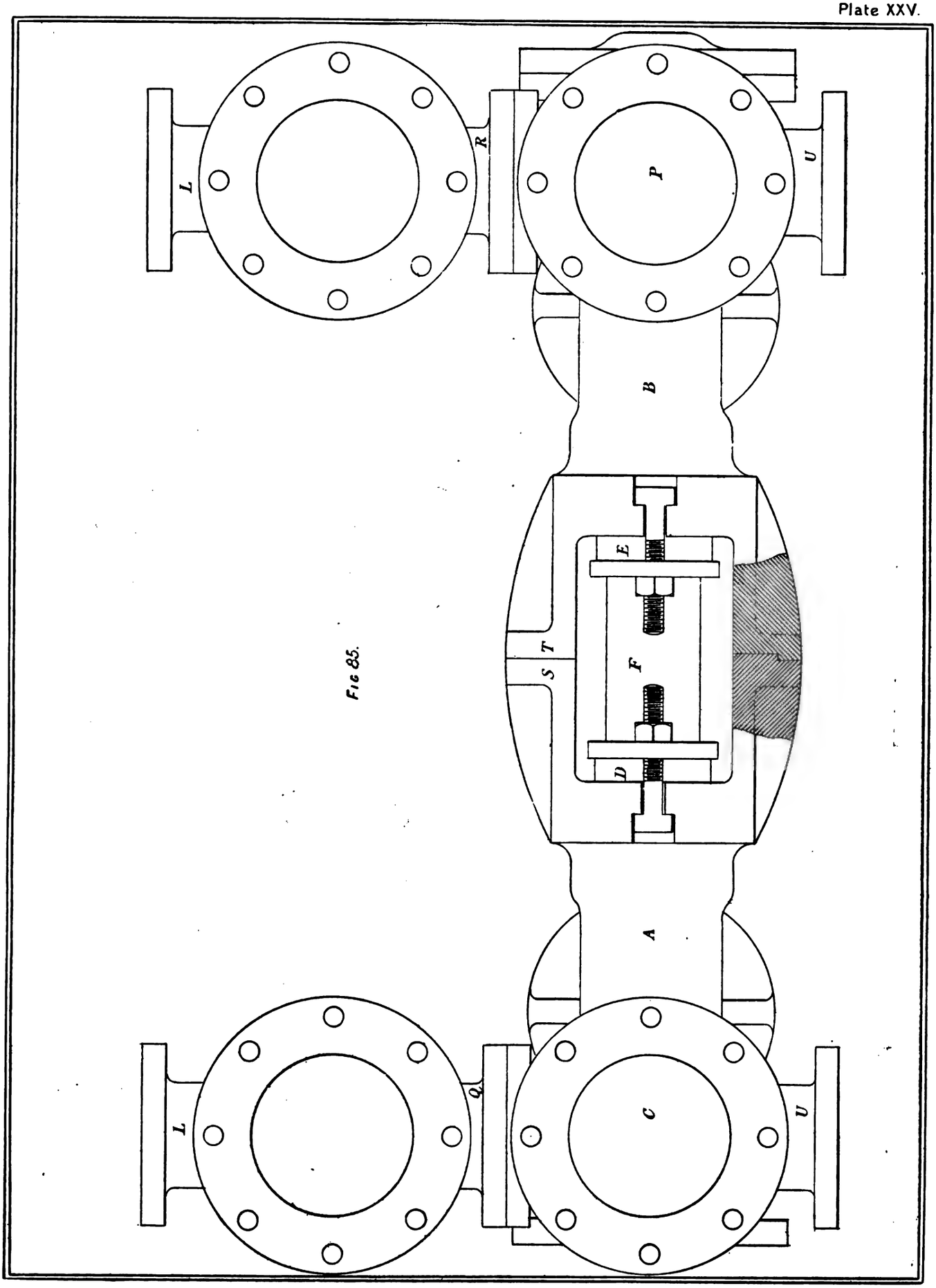

Fig 85.

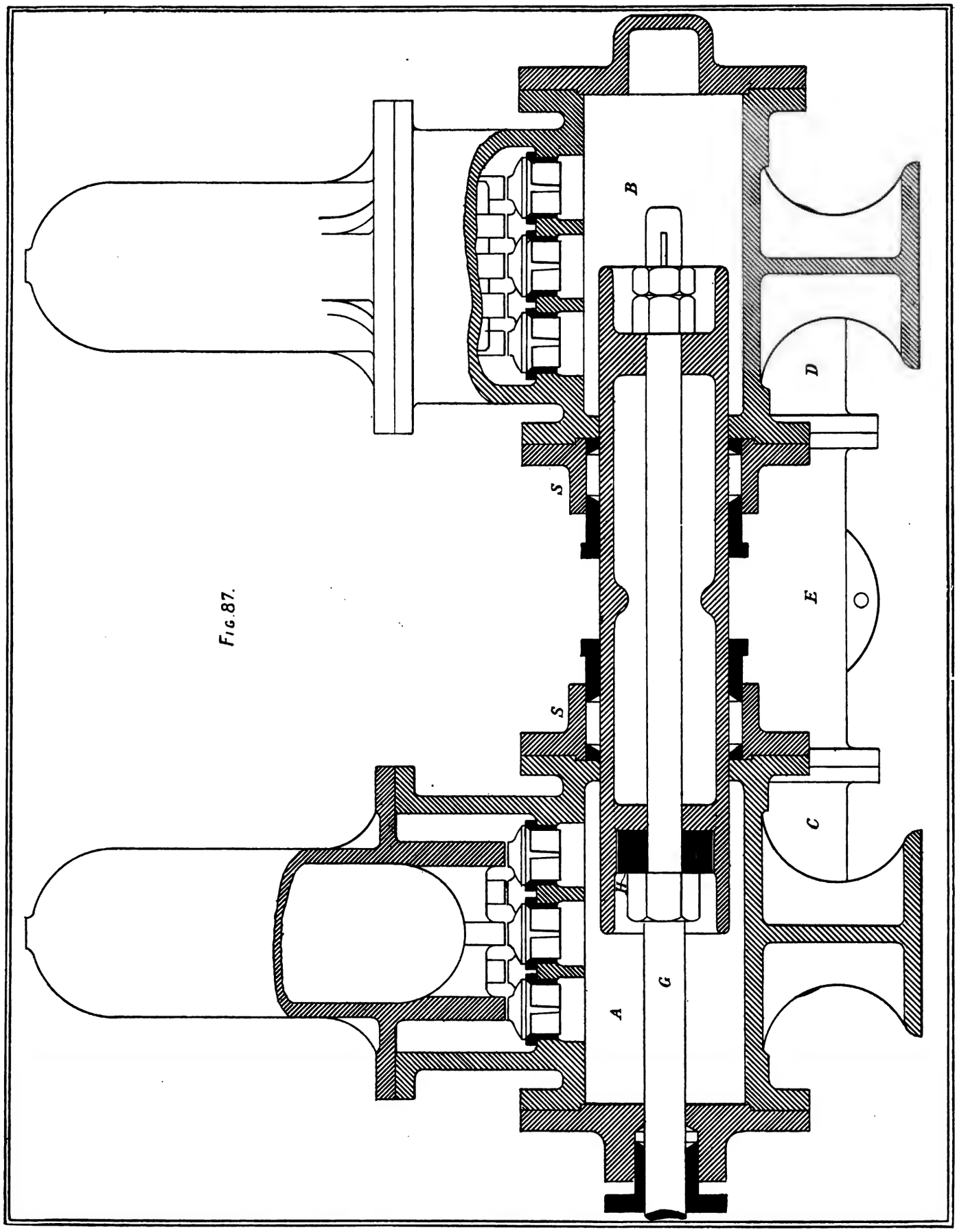

FIG. 87.

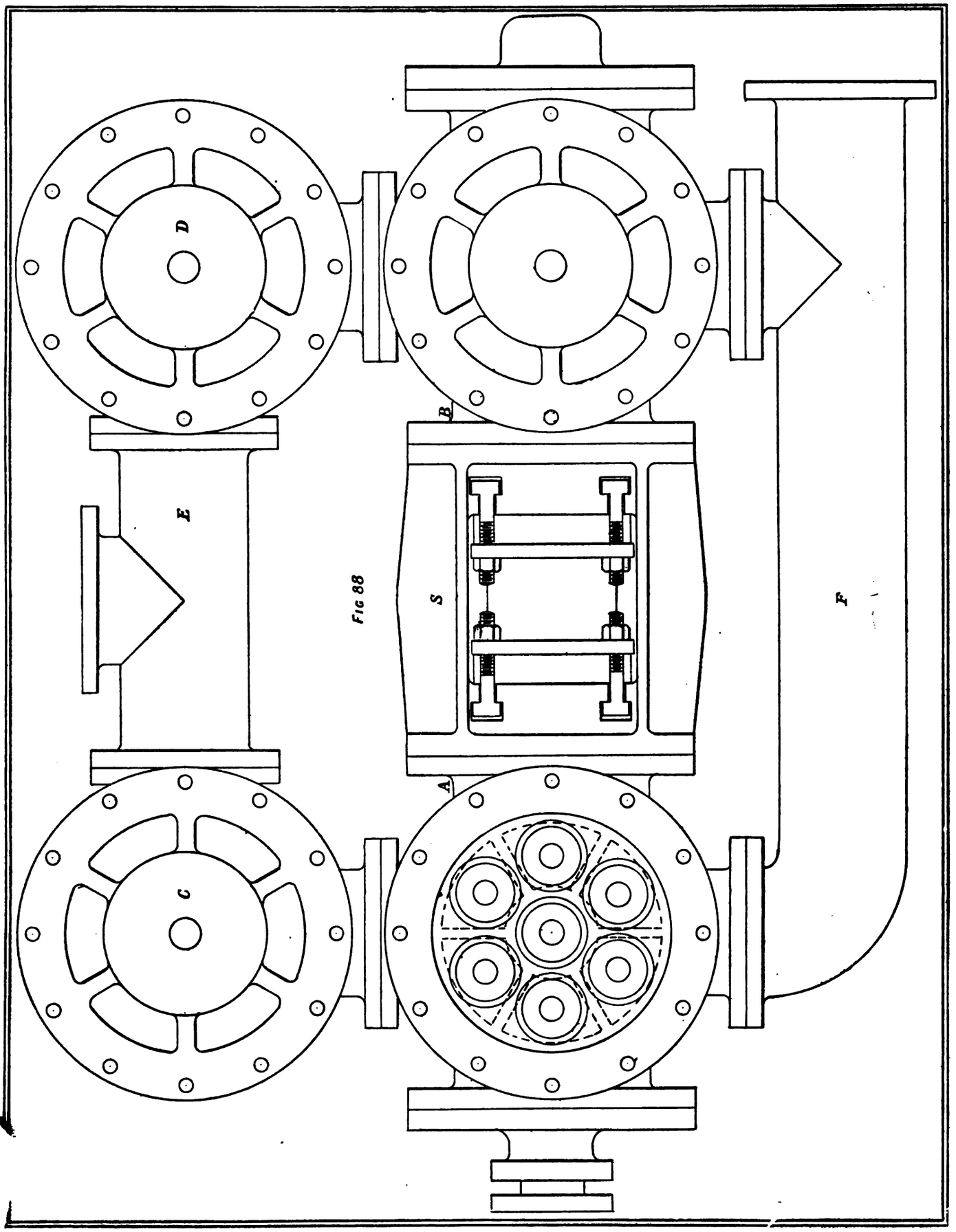

FIG 88

Fig. 90.

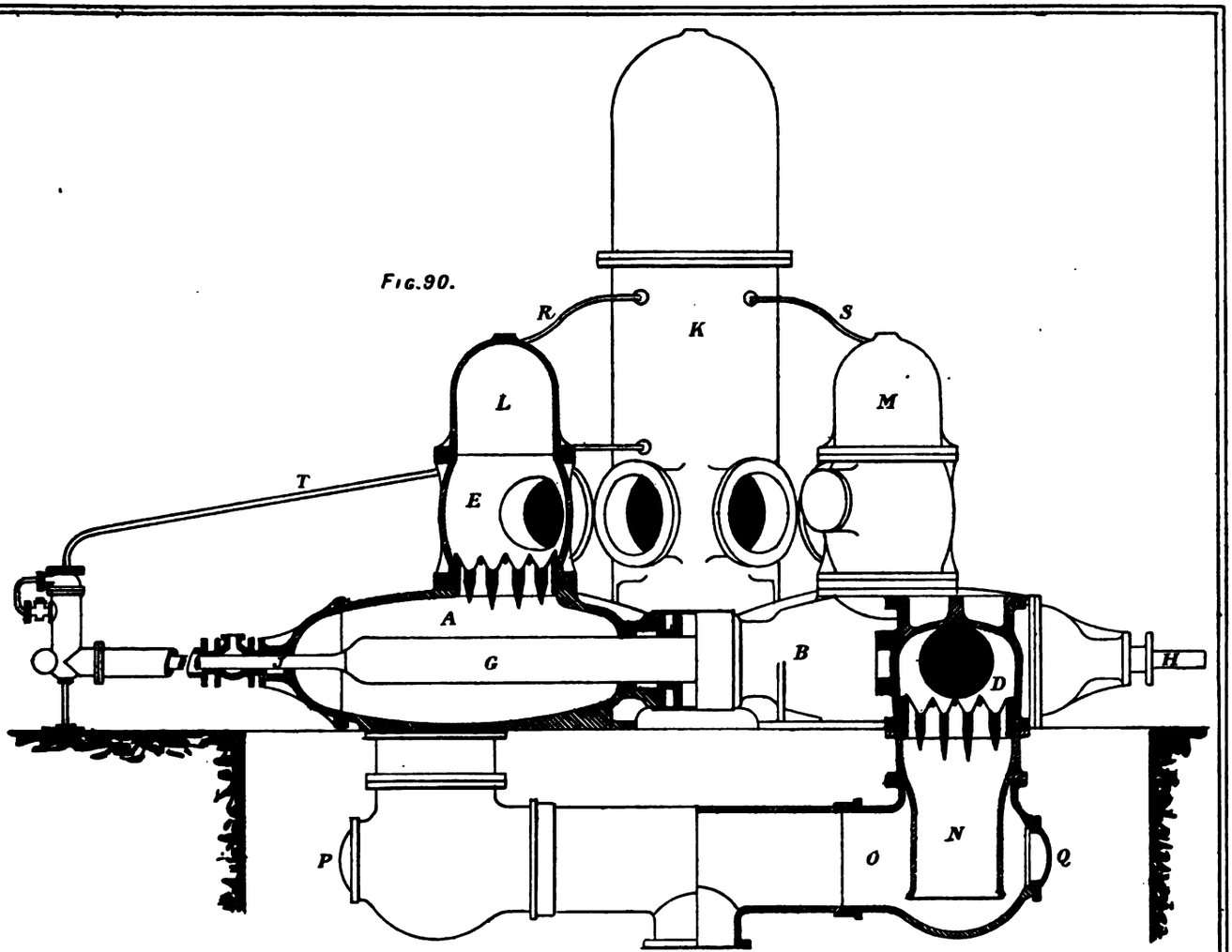

Fig. 91.

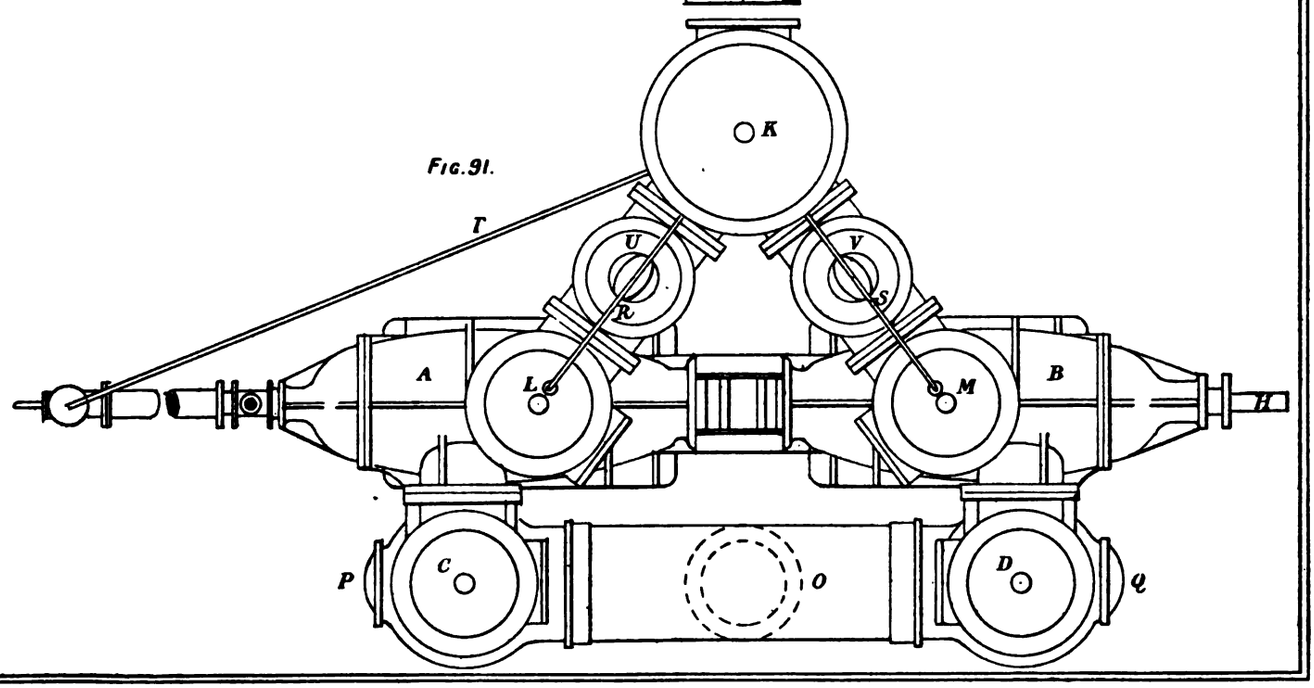

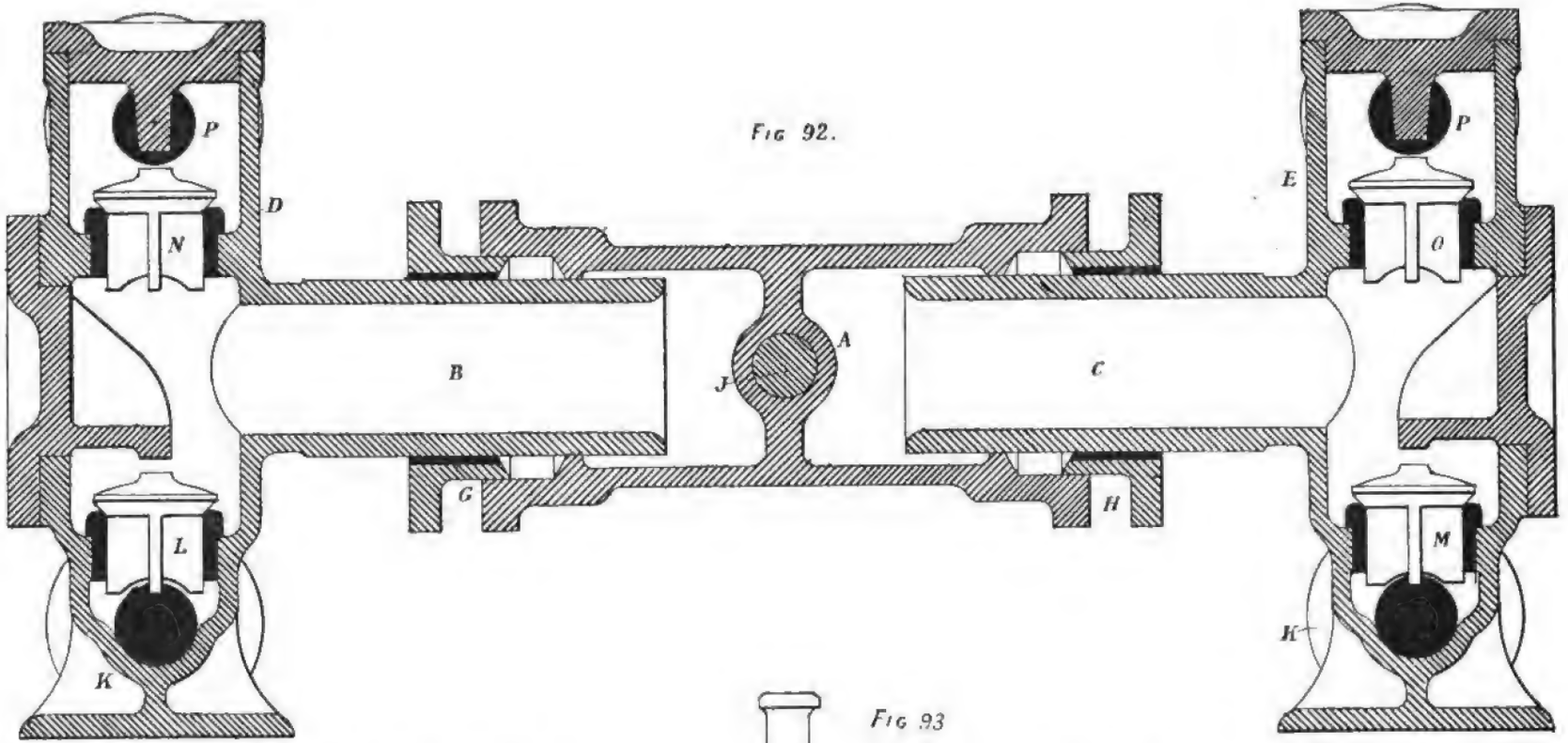

Fig 92.

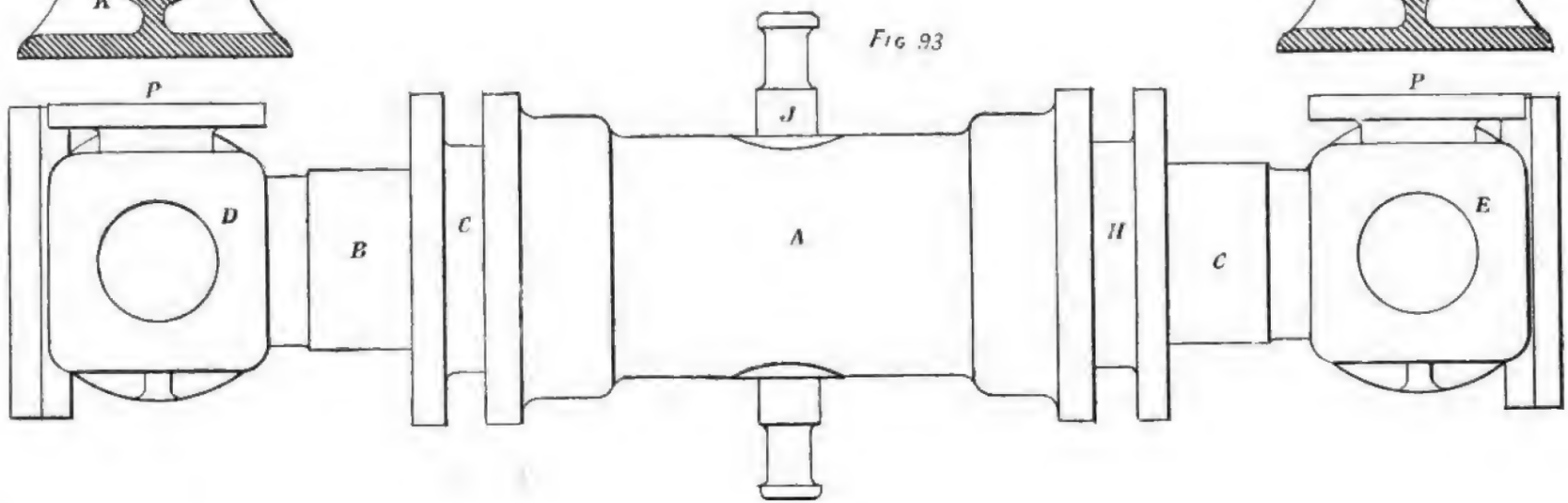

Fig 93

Plate XXIX.

Fig. 94.

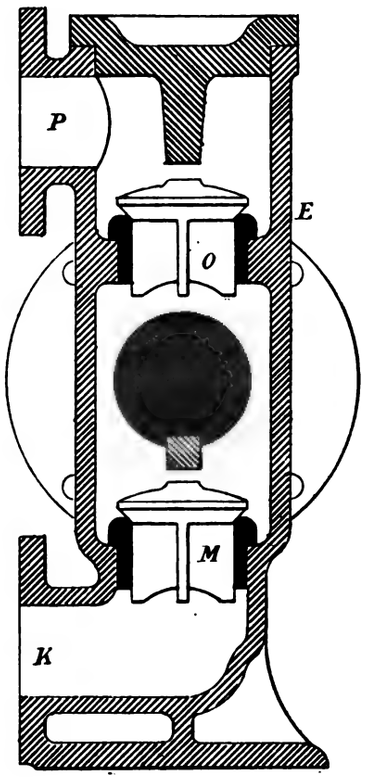

Fig. 95.

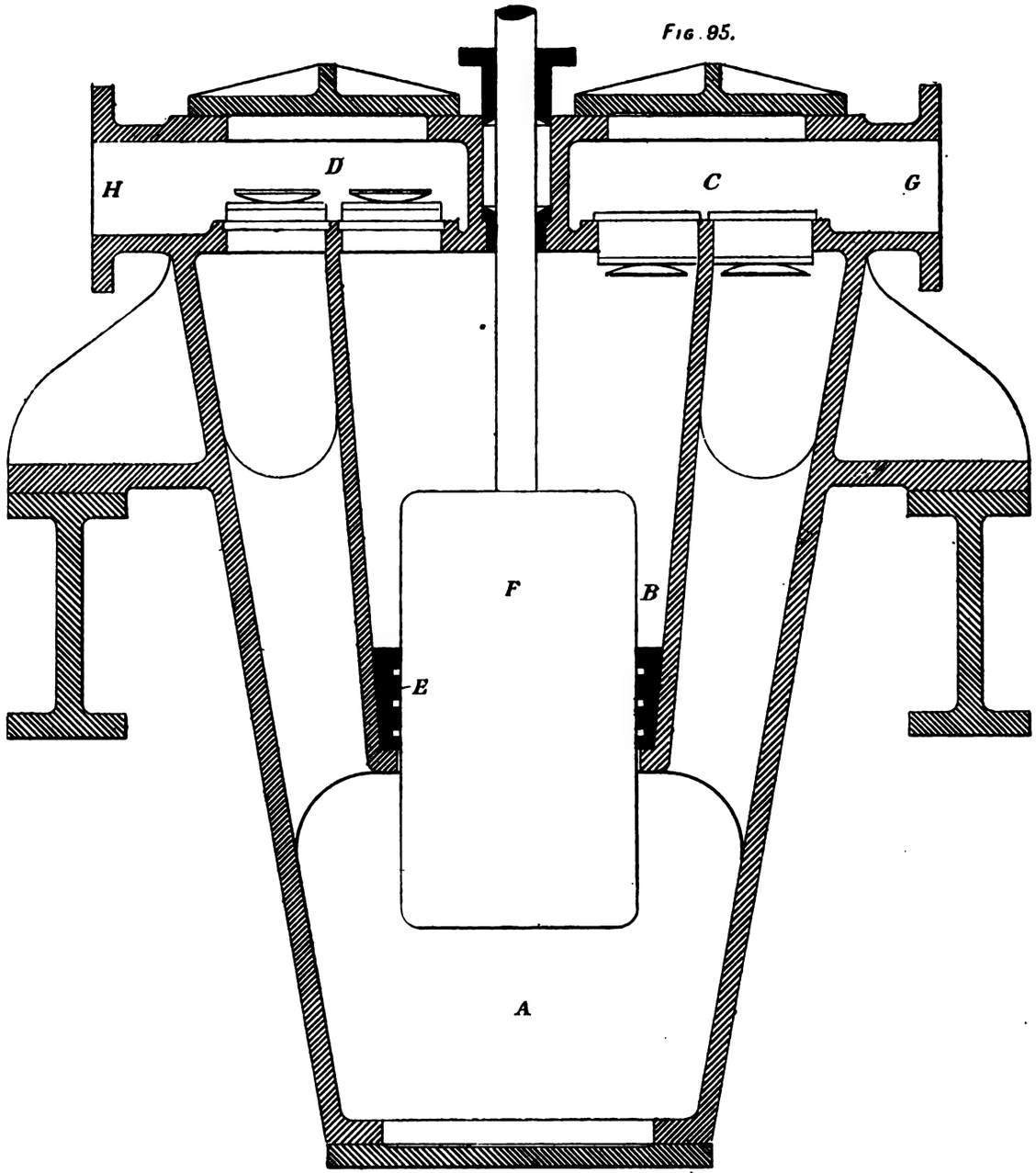

Plate XXX.

Fig. 96.

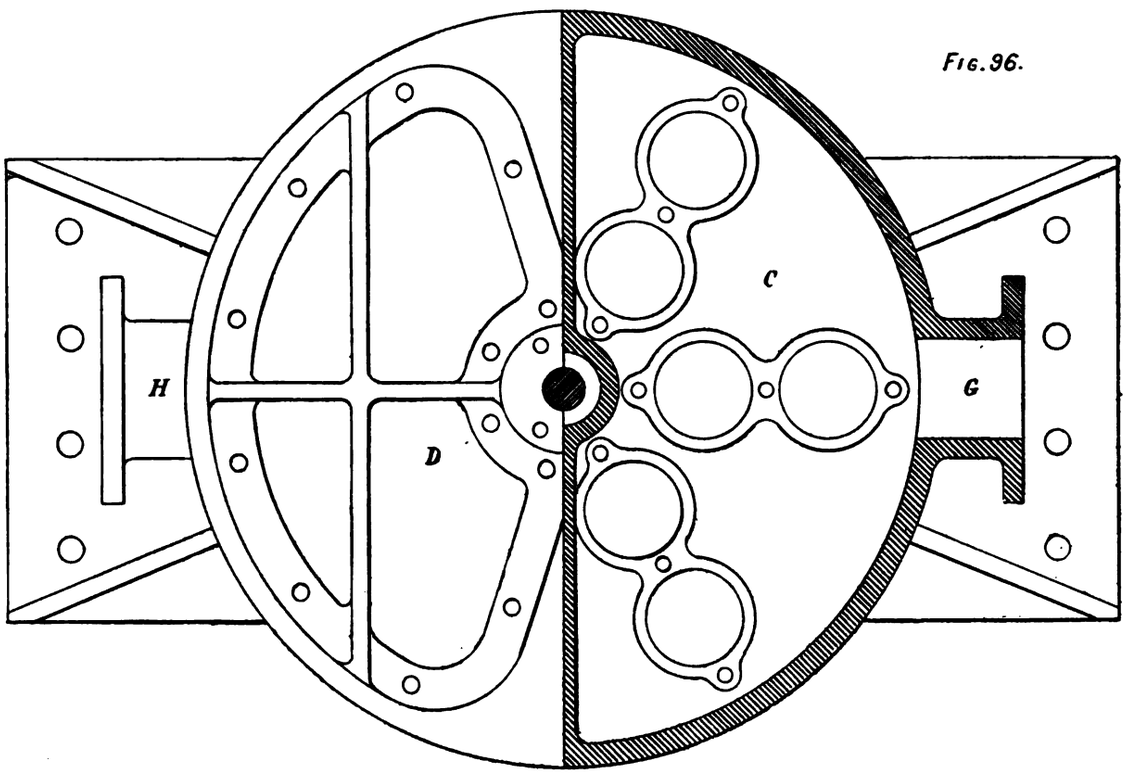

Fig. 89.

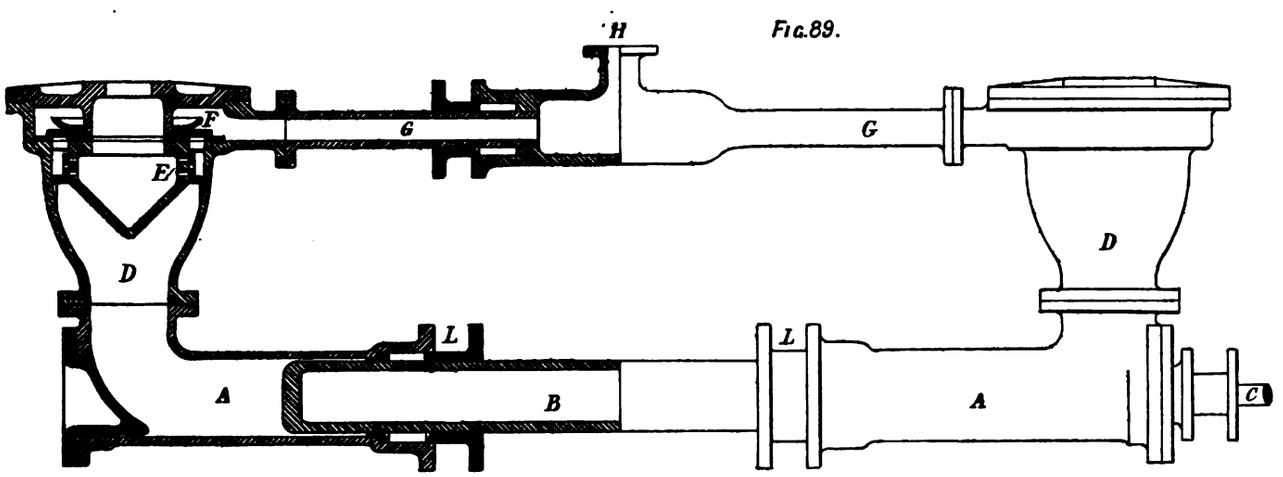

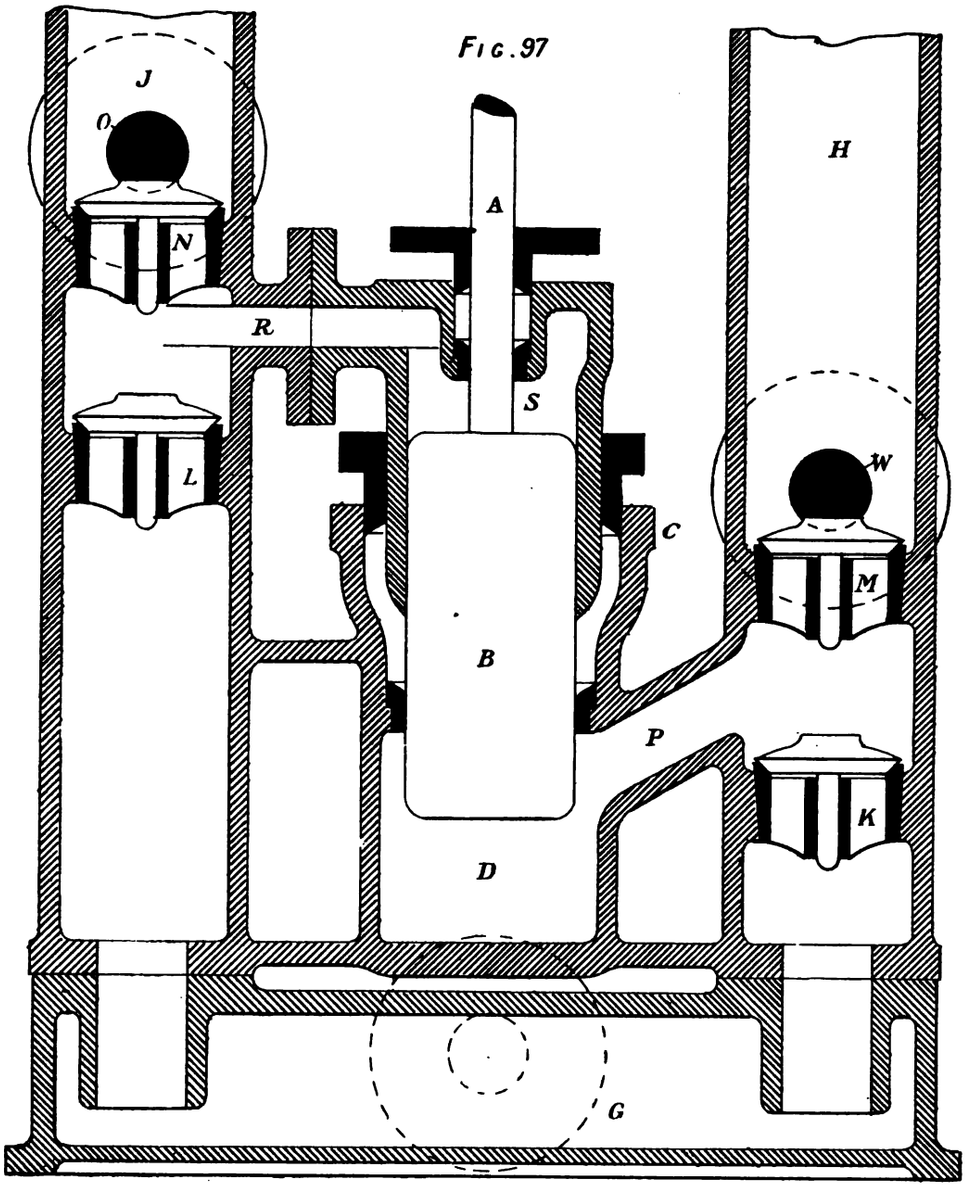

Fig. 97

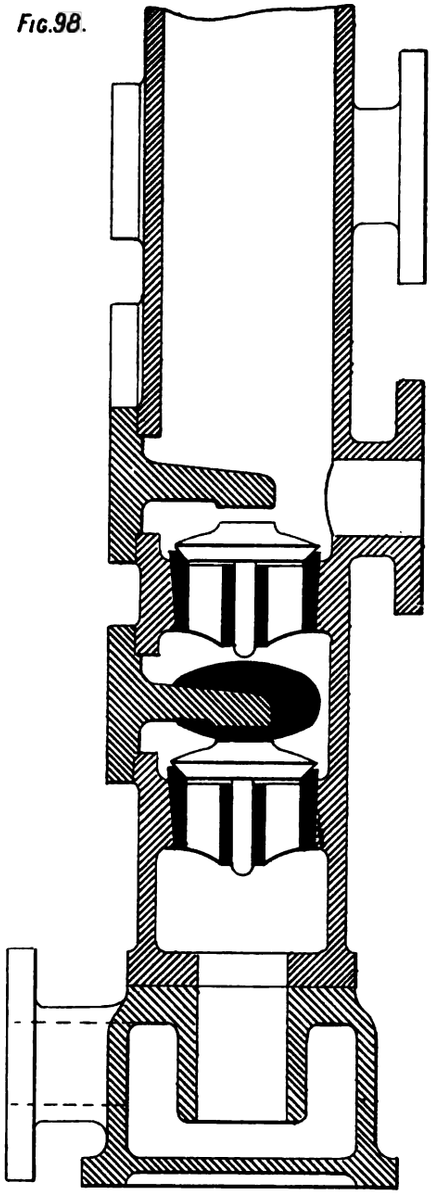

Fig. 98.

Plate XXXII.

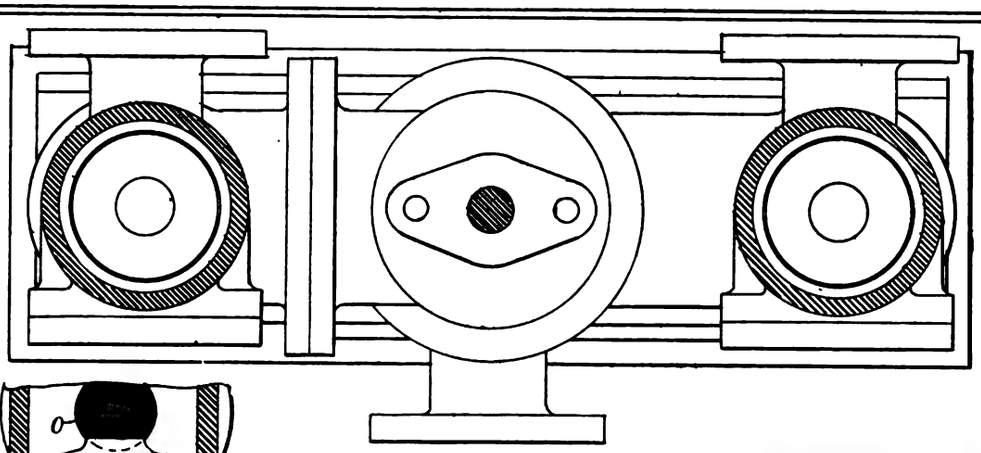

Fig. 99.

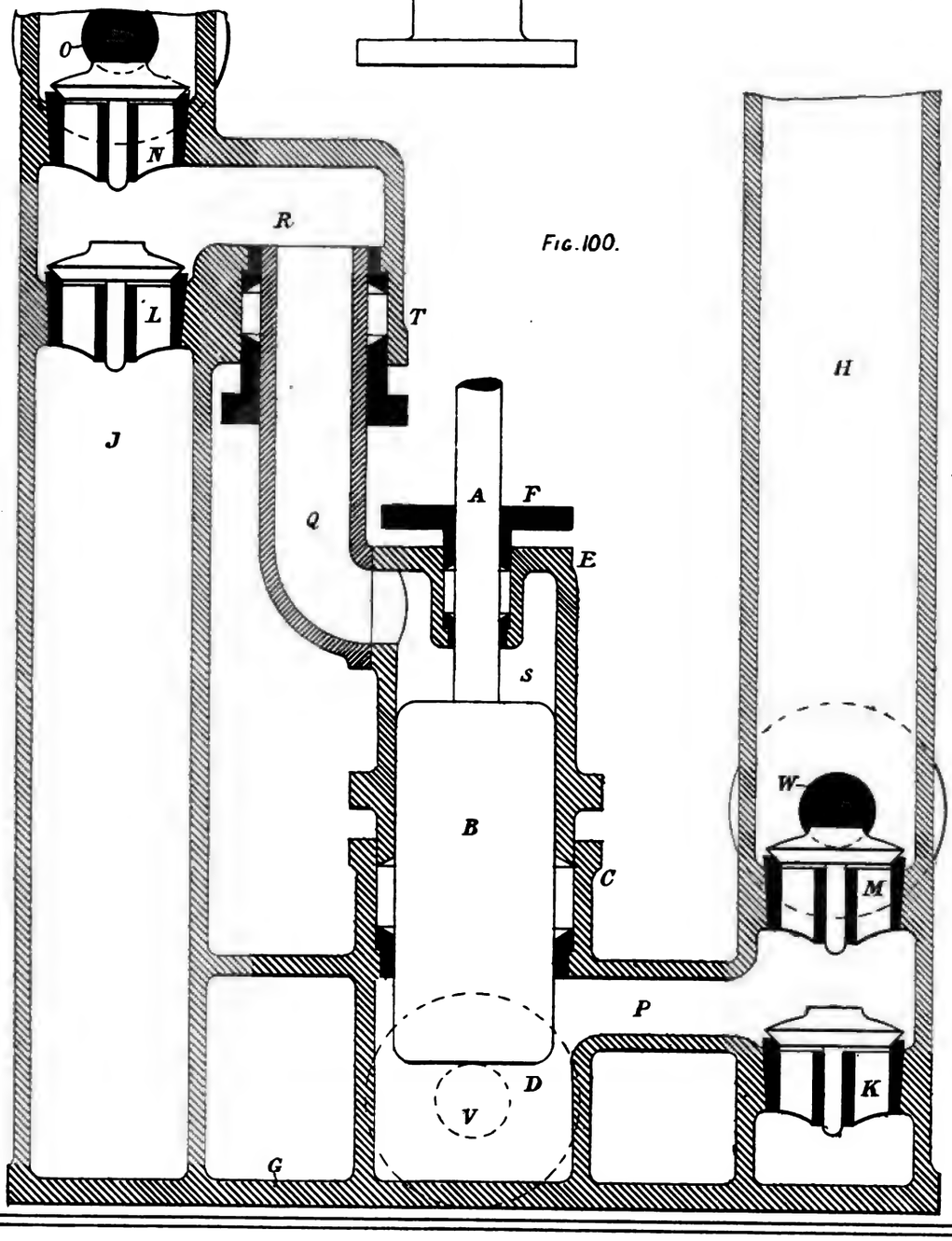

Fig. 100.

Fig. 103.

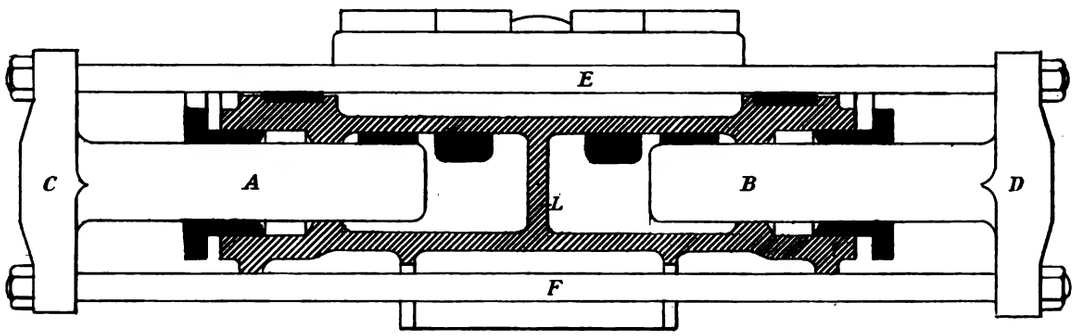

Fig 104

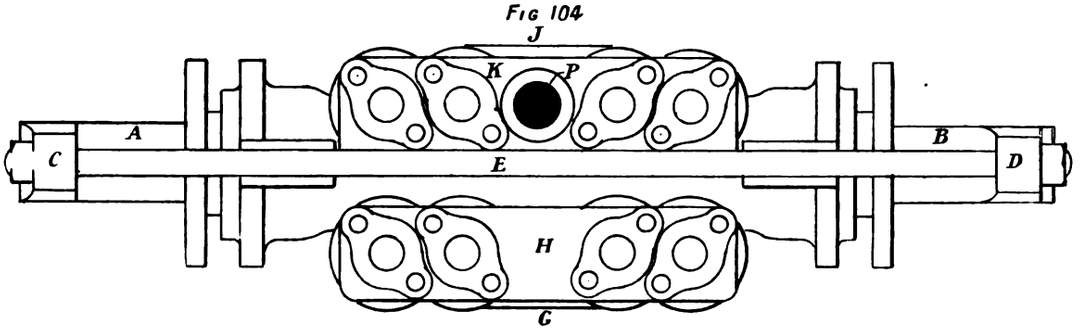

Fig 101.

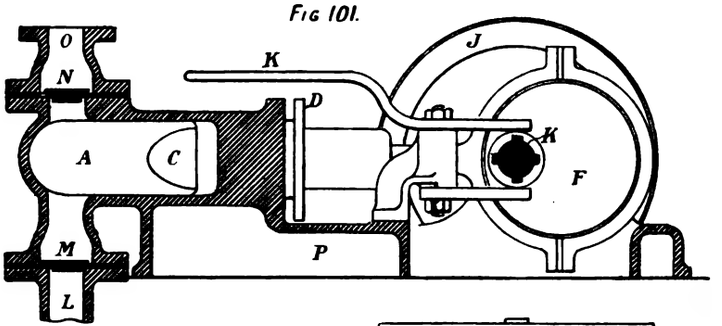

Fig 102

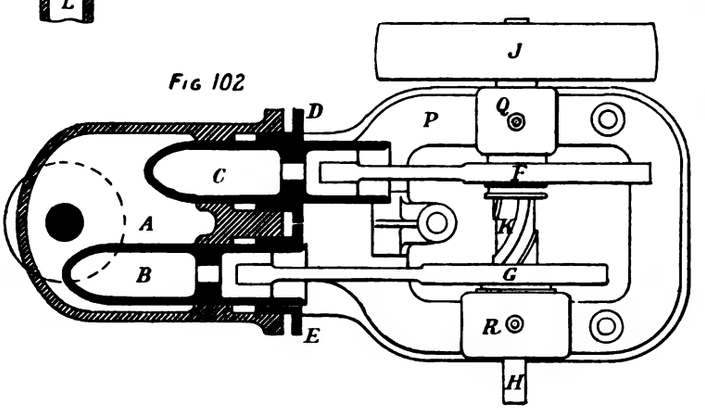

Fig 105

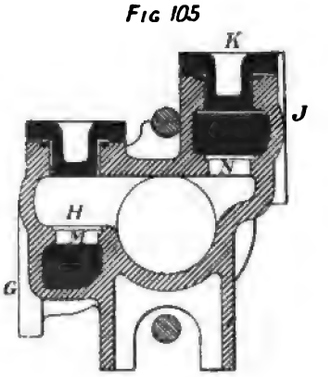

Fig 106.

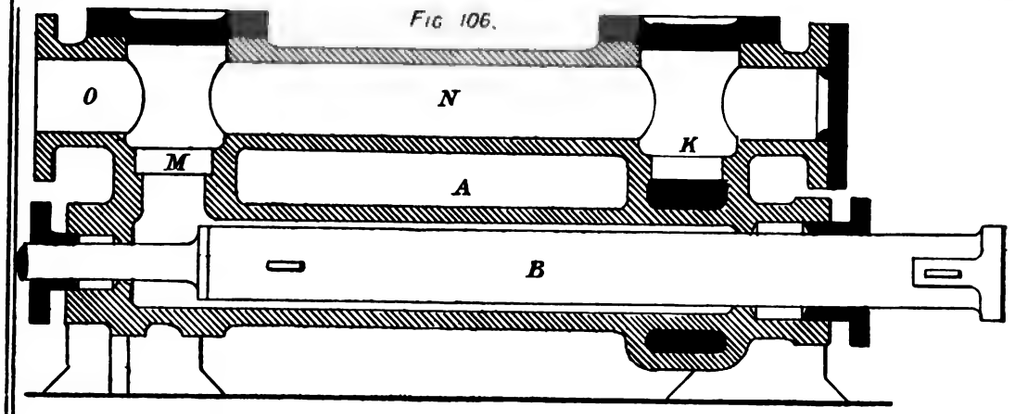

Fig 108

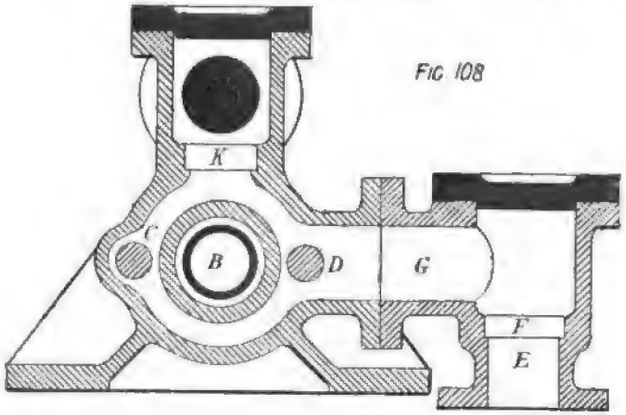

Fig 107

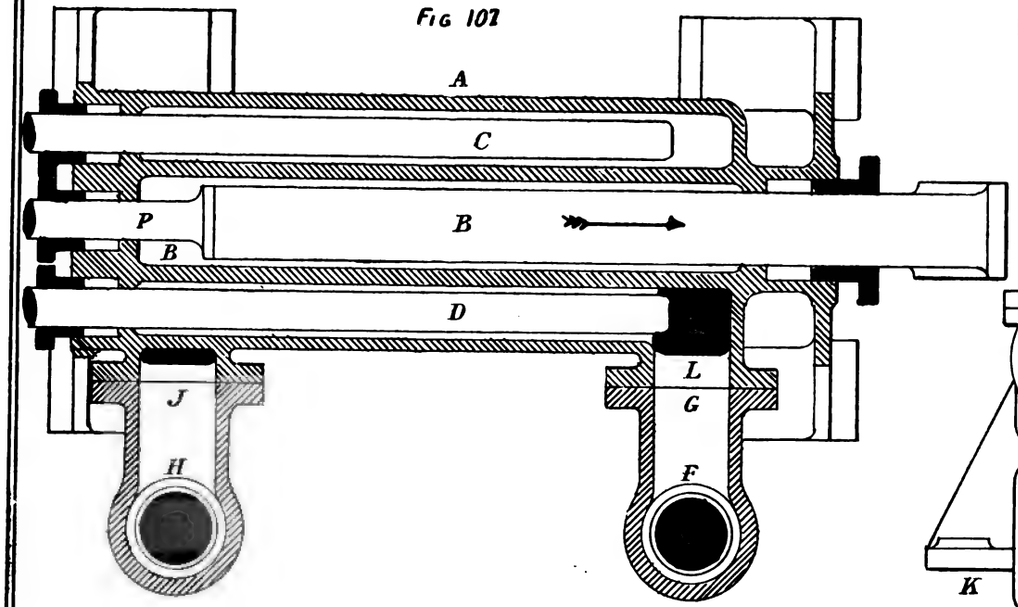

Fig 112.

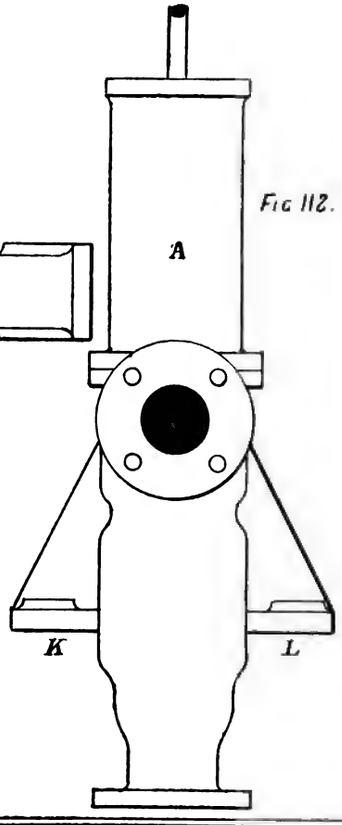

Fig 111

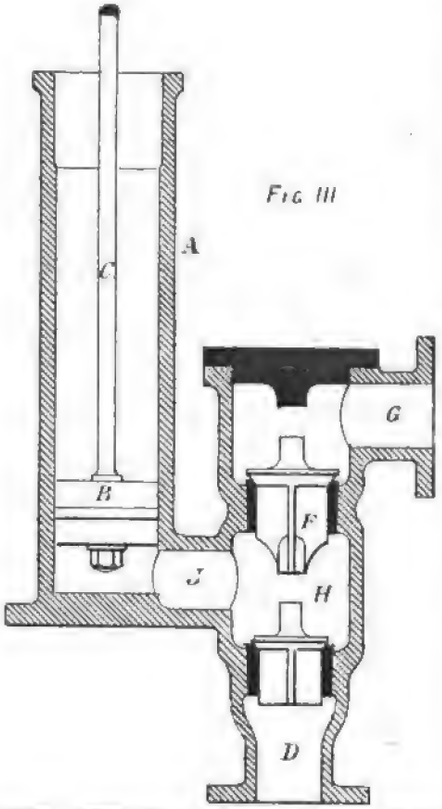

Plate XXXV.

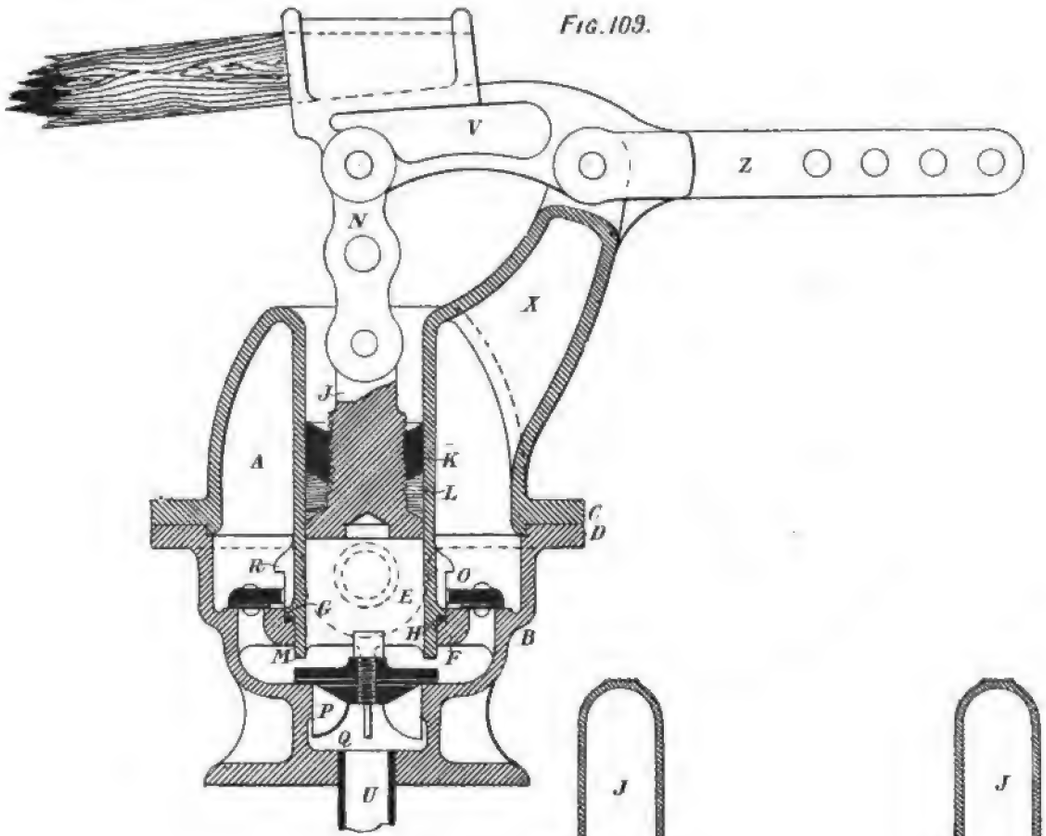

Fig. 109.

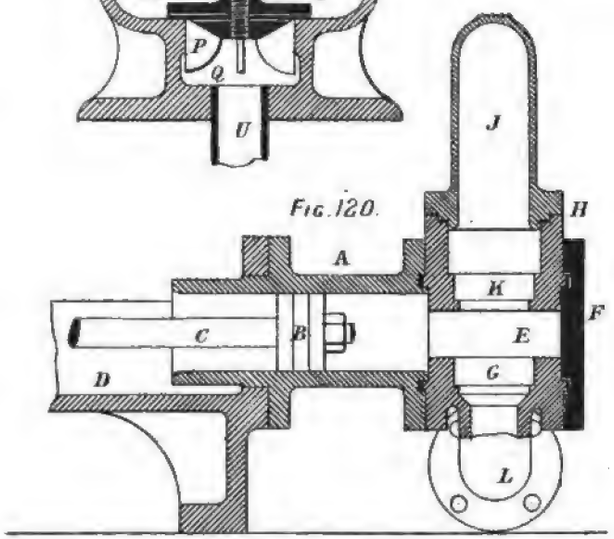

Fig. 120.

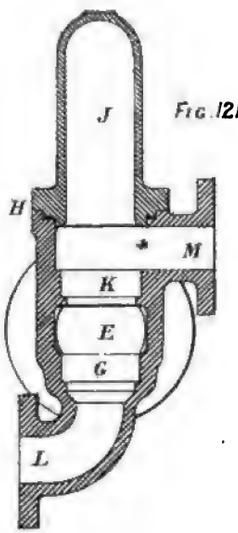

Fig. 121.

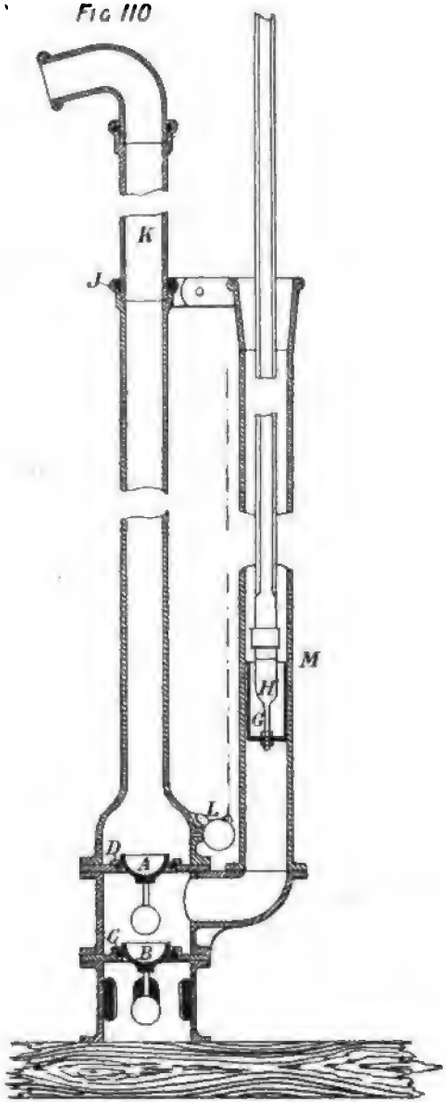

Fig. 110

Plate XXXVI.

Fig 113

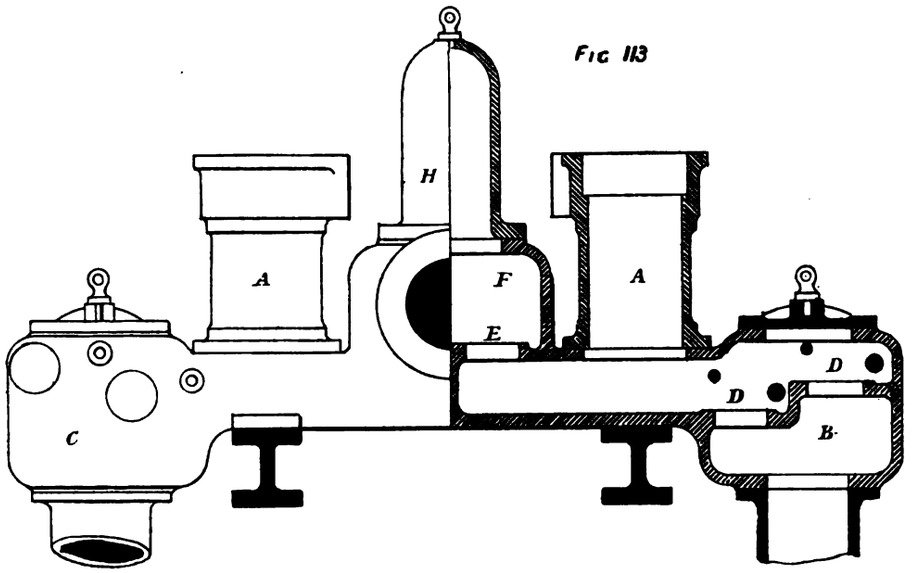

Fig 114

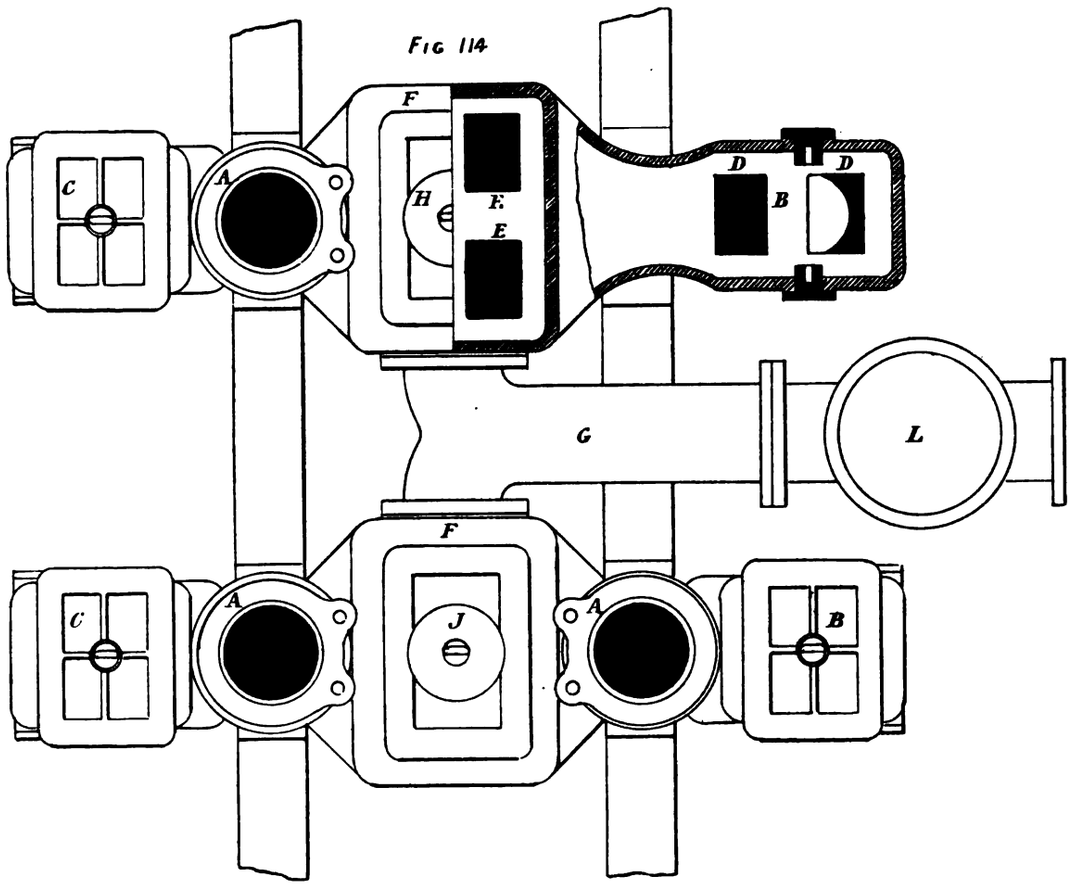

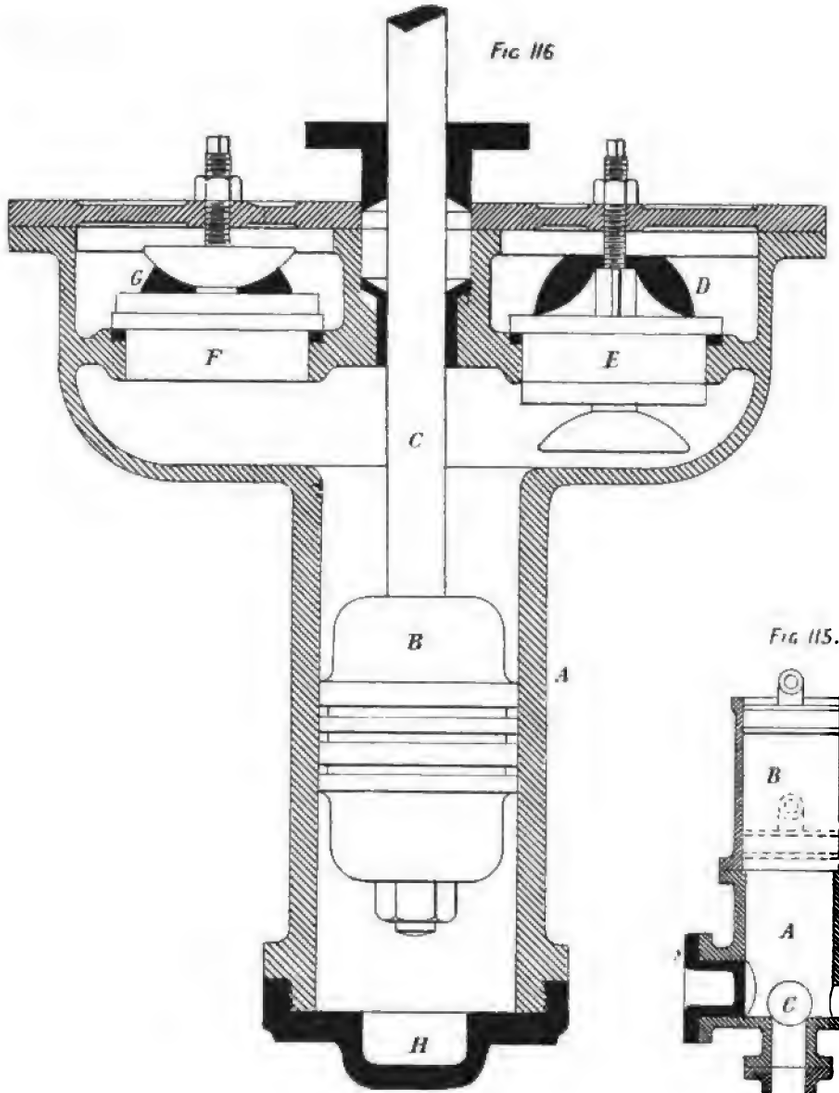

Fig. 116

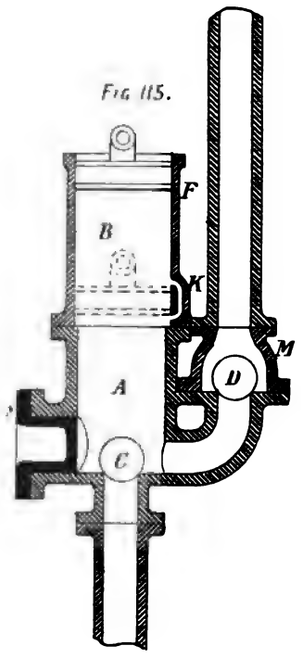

Fig. 115.

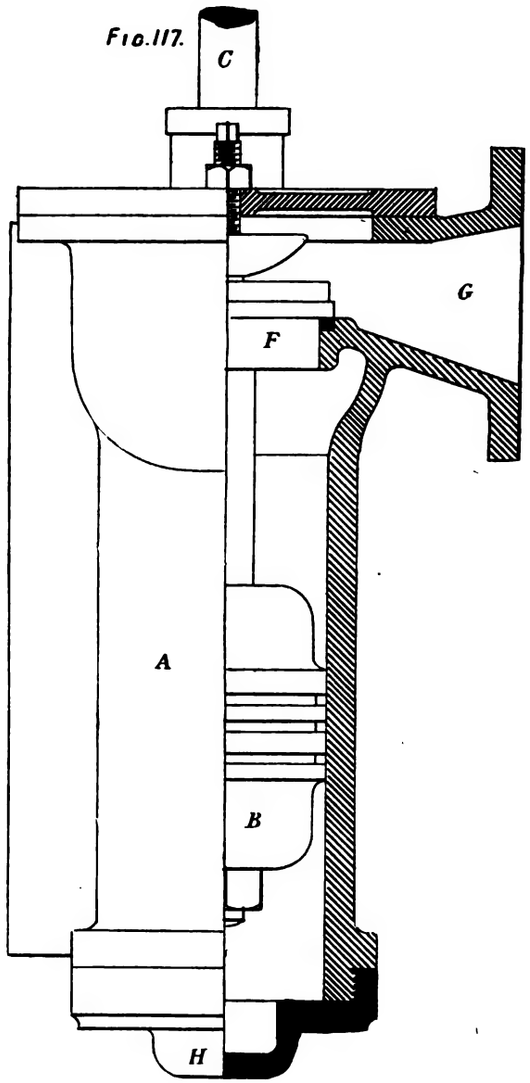

Fig. 117.

Plate XXXVIII.

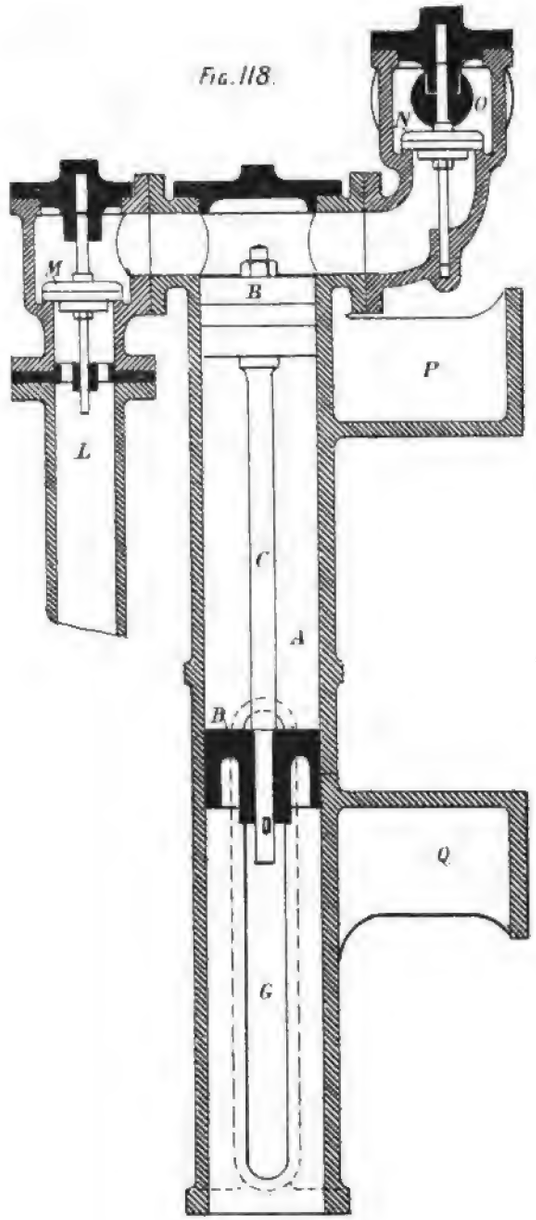

Fig. 118.

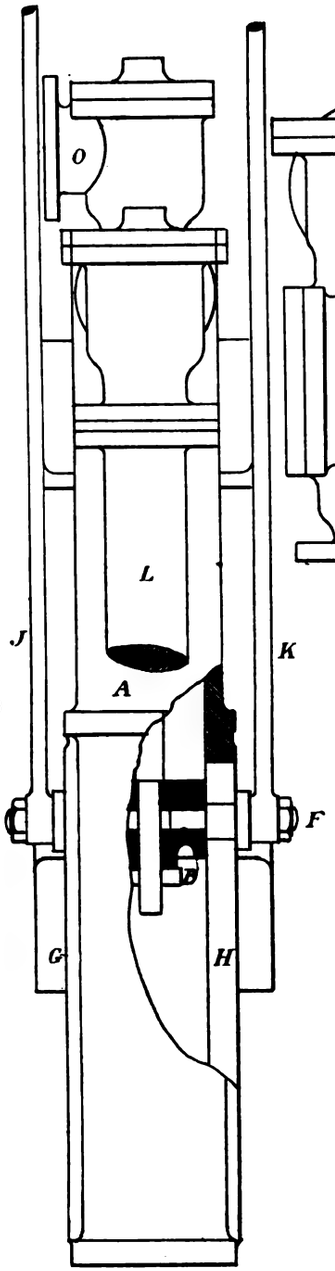

Fig 119

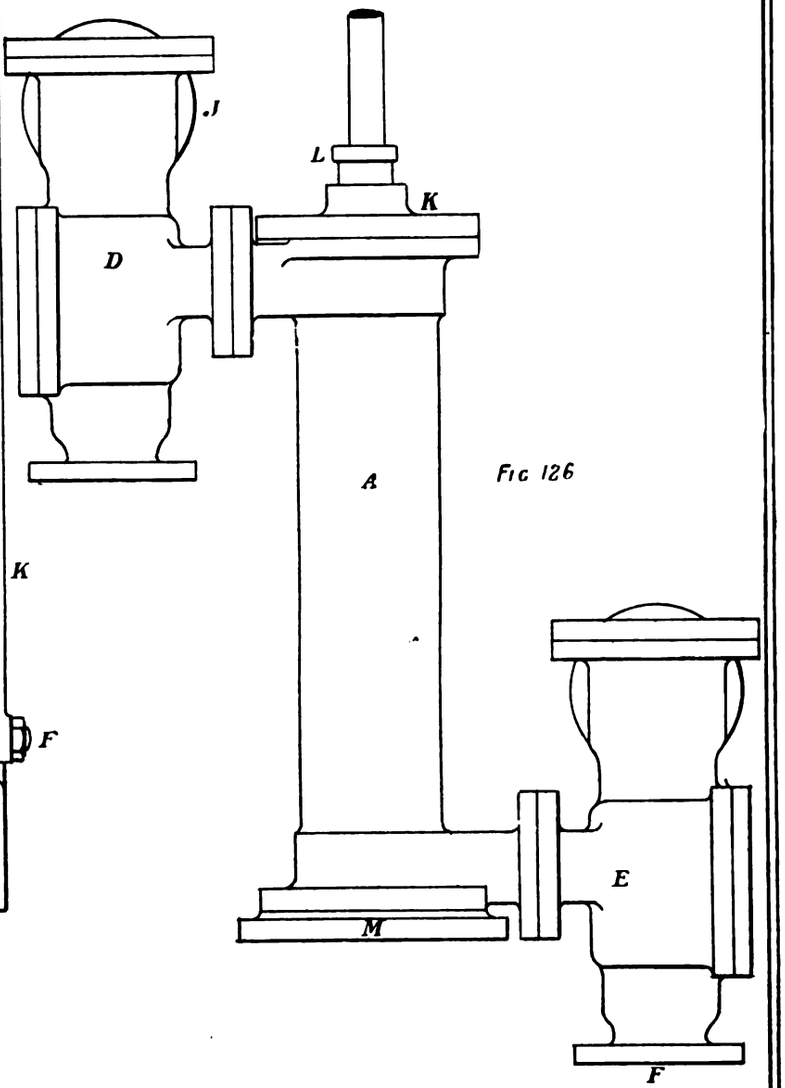

Fig 126

Plate XXXIX

Fig 122.

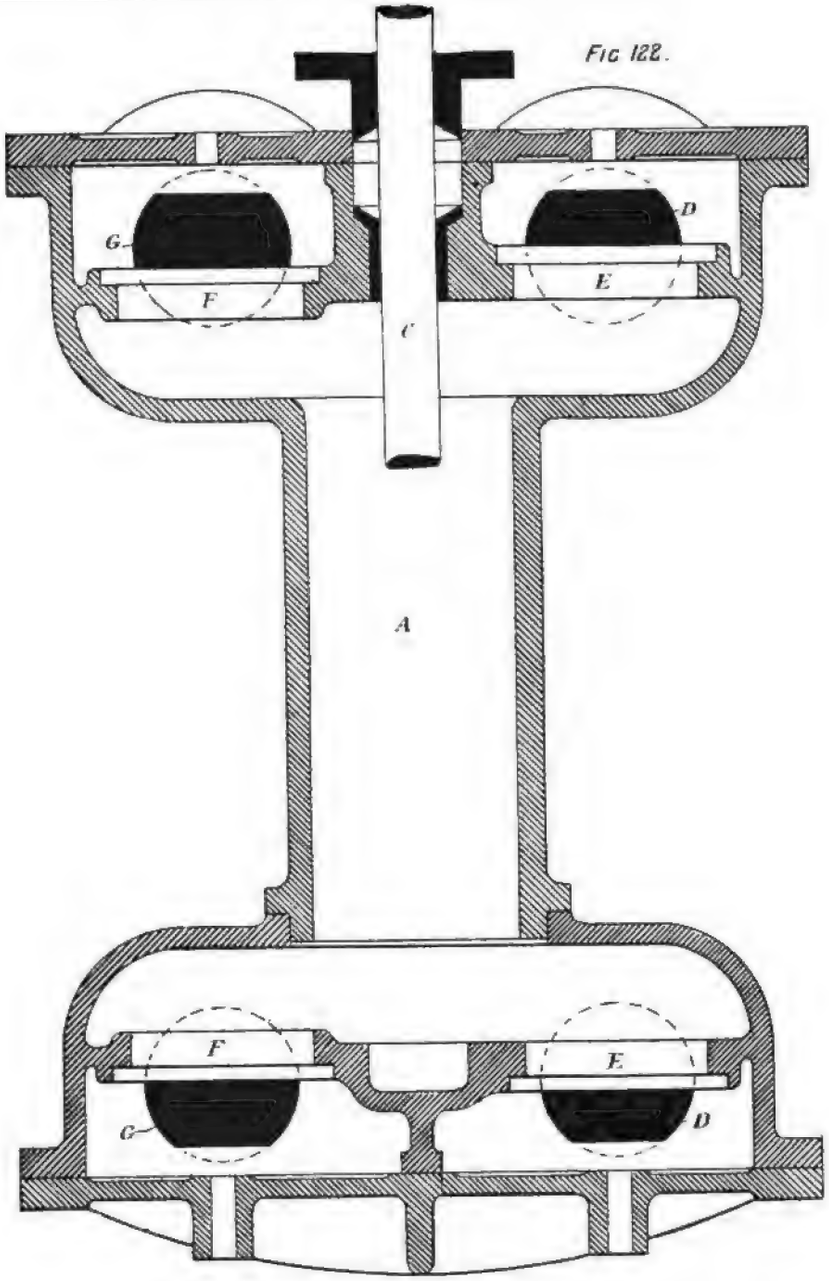

Fig 123.

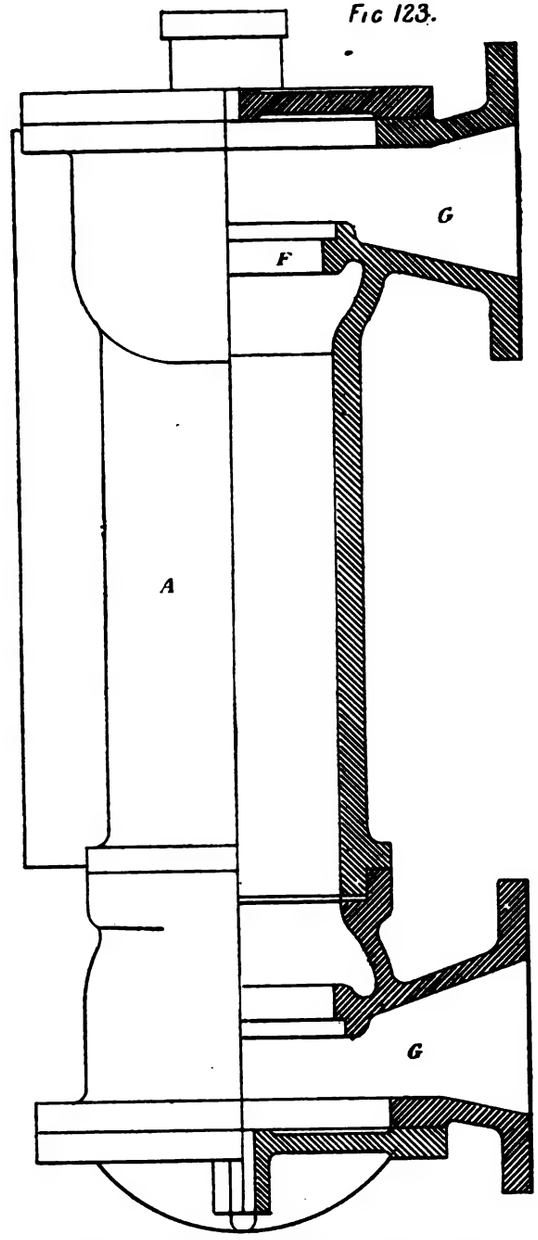

Plate XL.

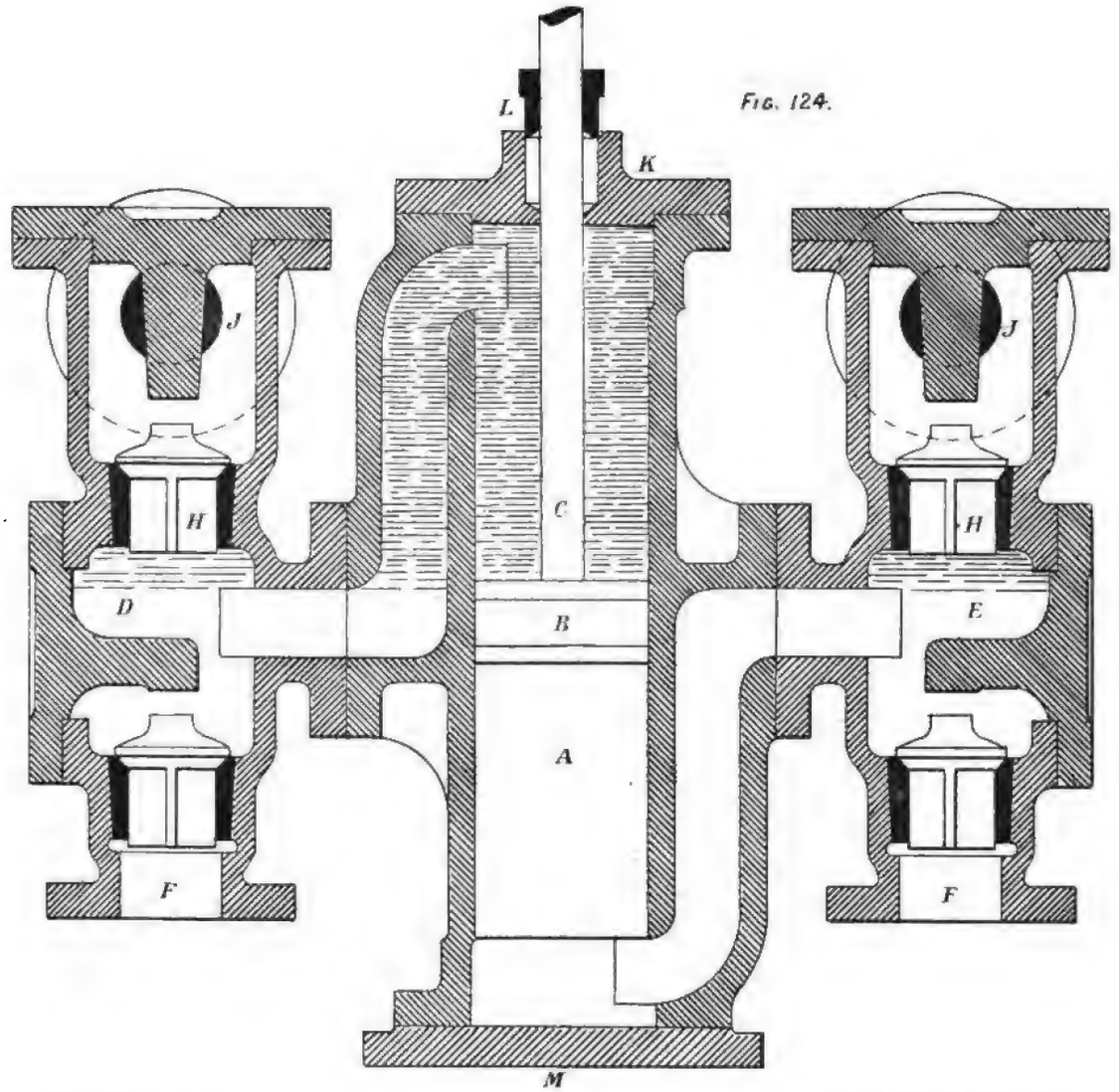

Fig. 124.

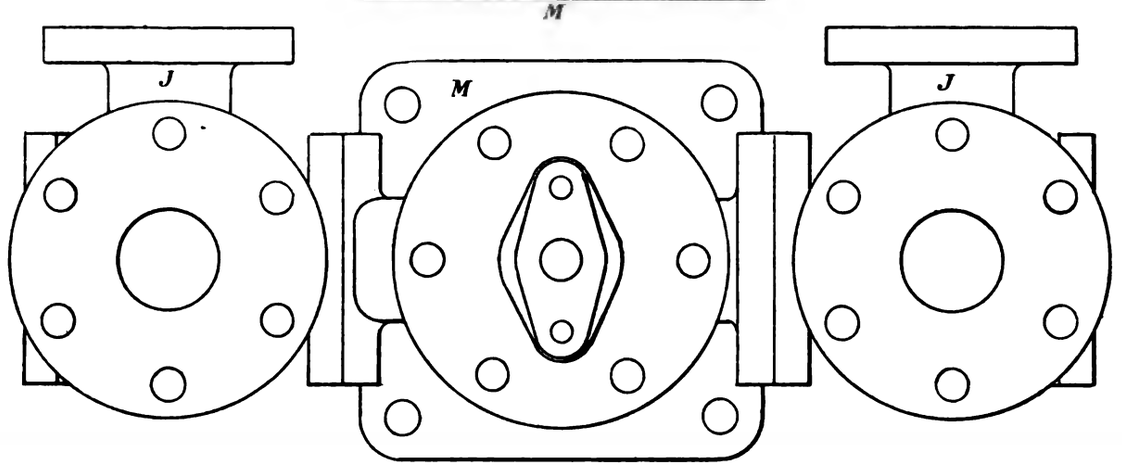

Fig. 125.

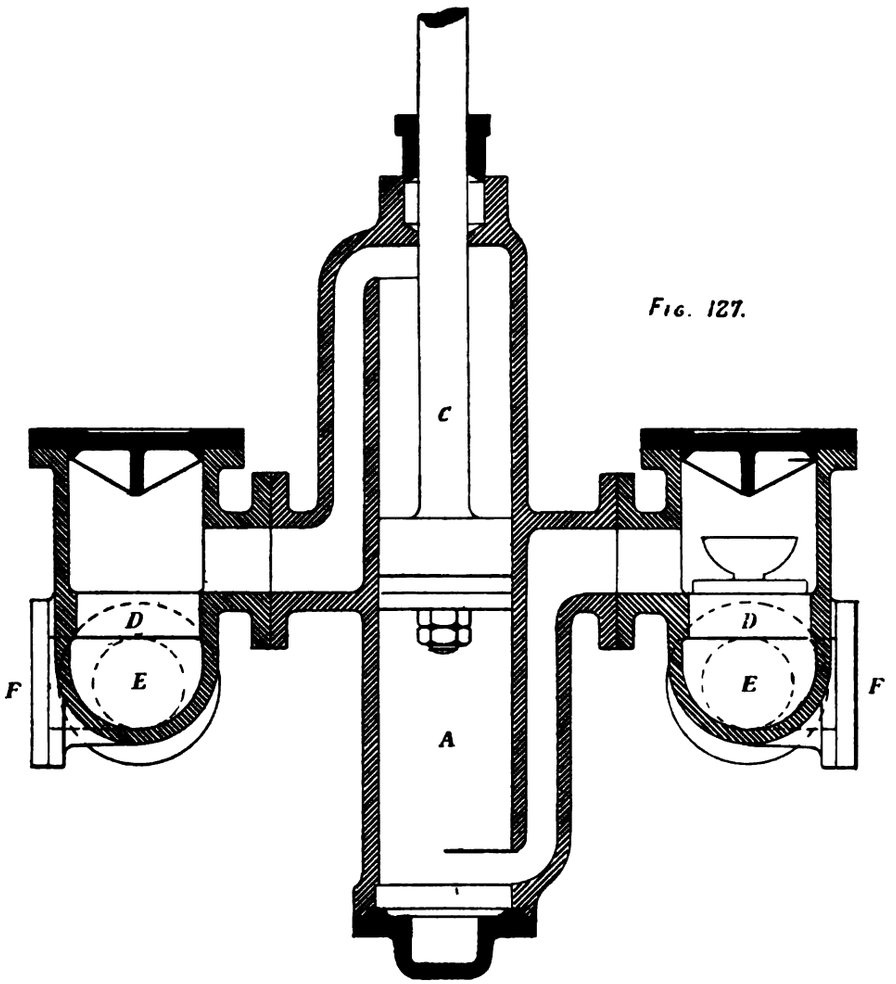

Fig. 127.

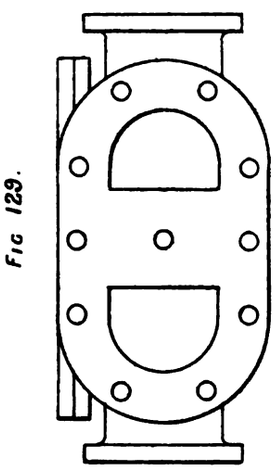

Fig 129.

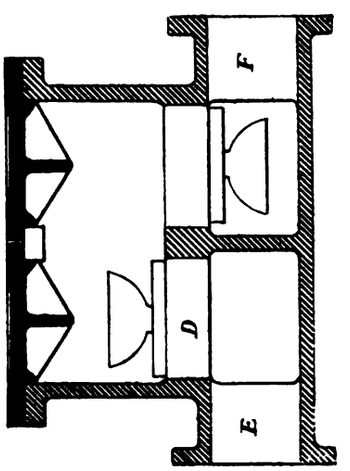

Fig. 128.

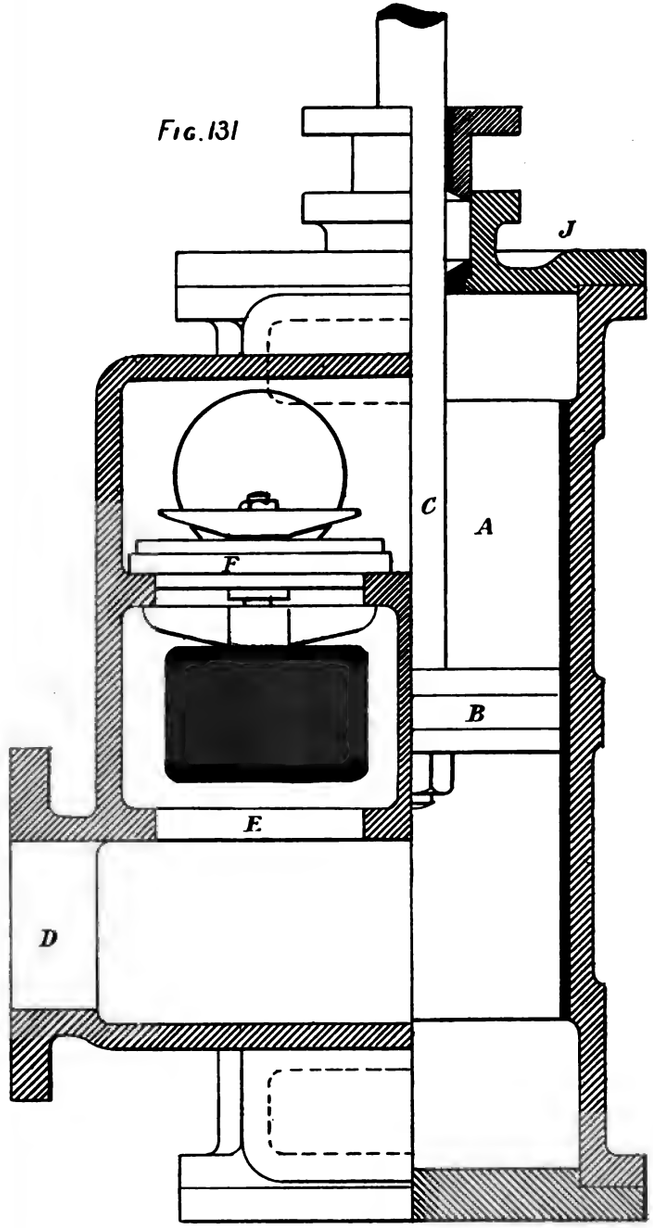

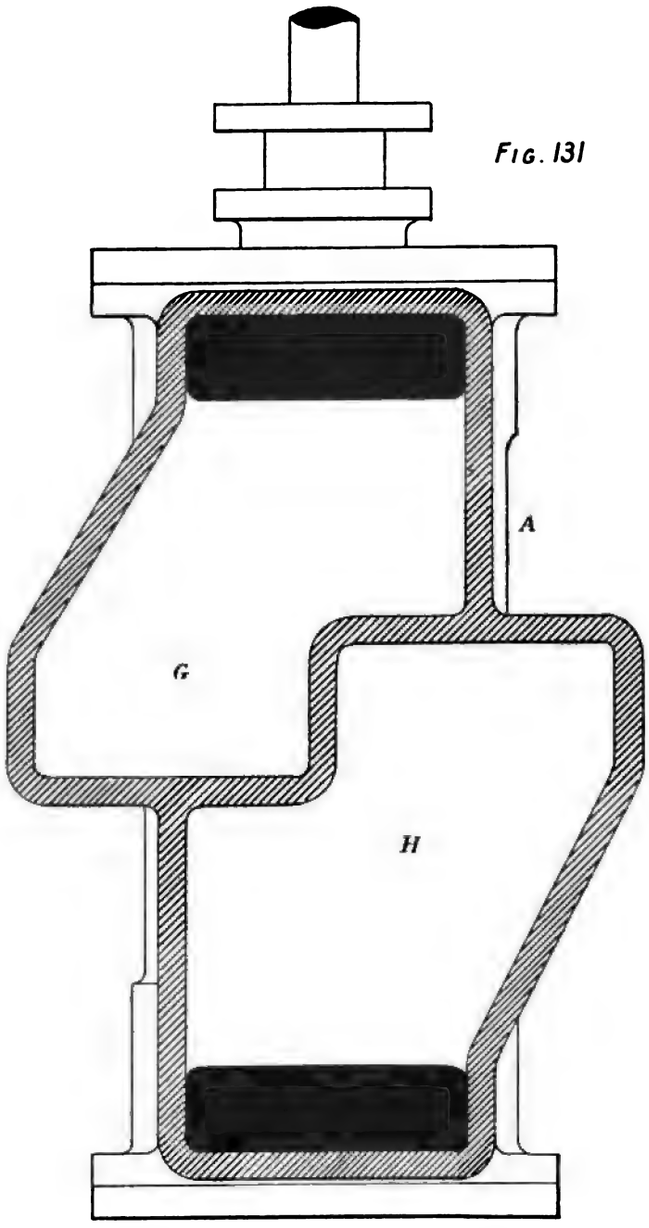

Plate XLIII.

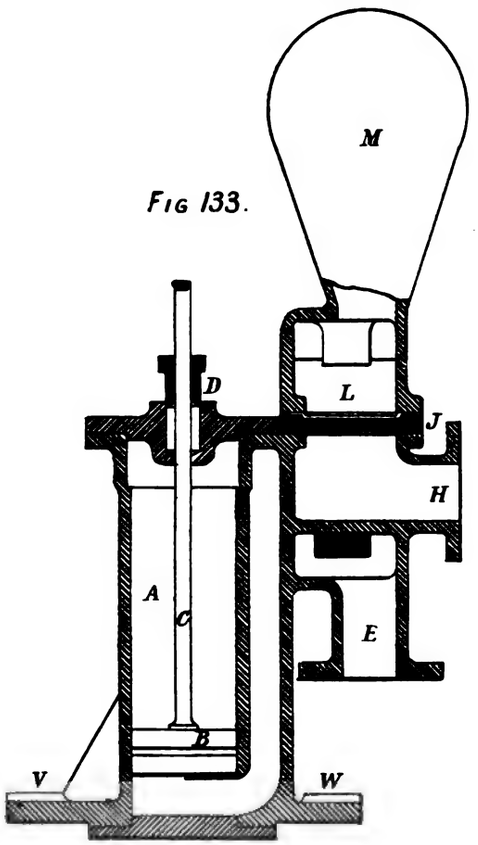

Fig 133.

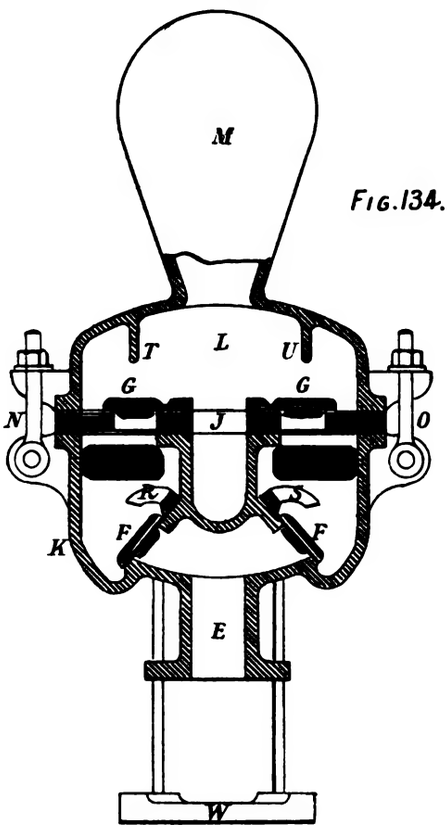

Fig.134.

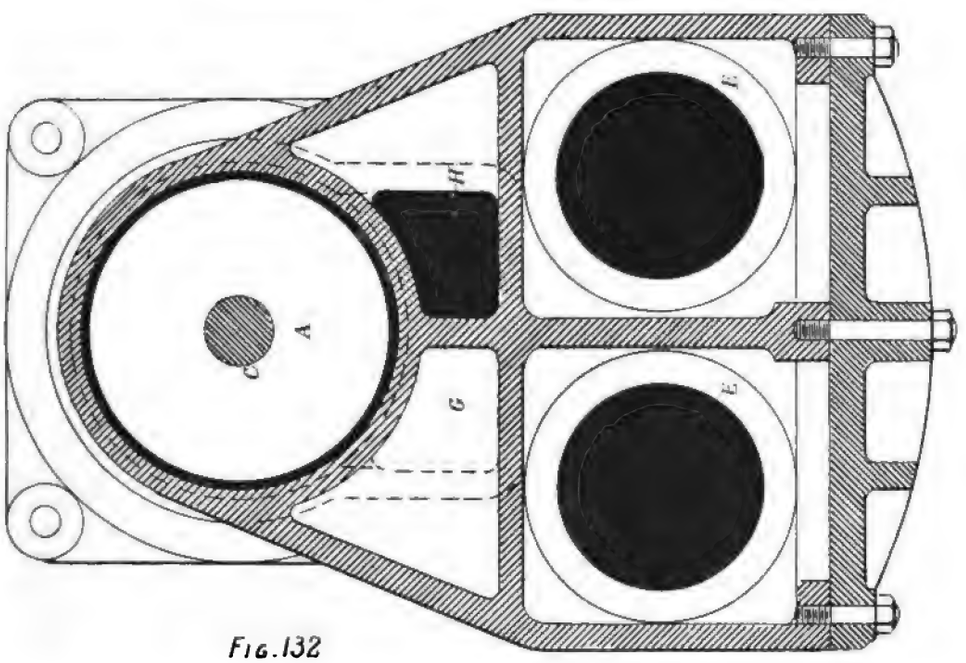

Fig.132

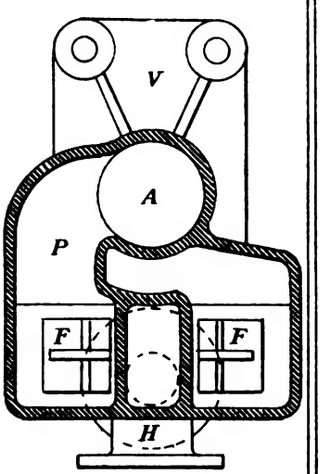

Fig 135

Fig. 136.

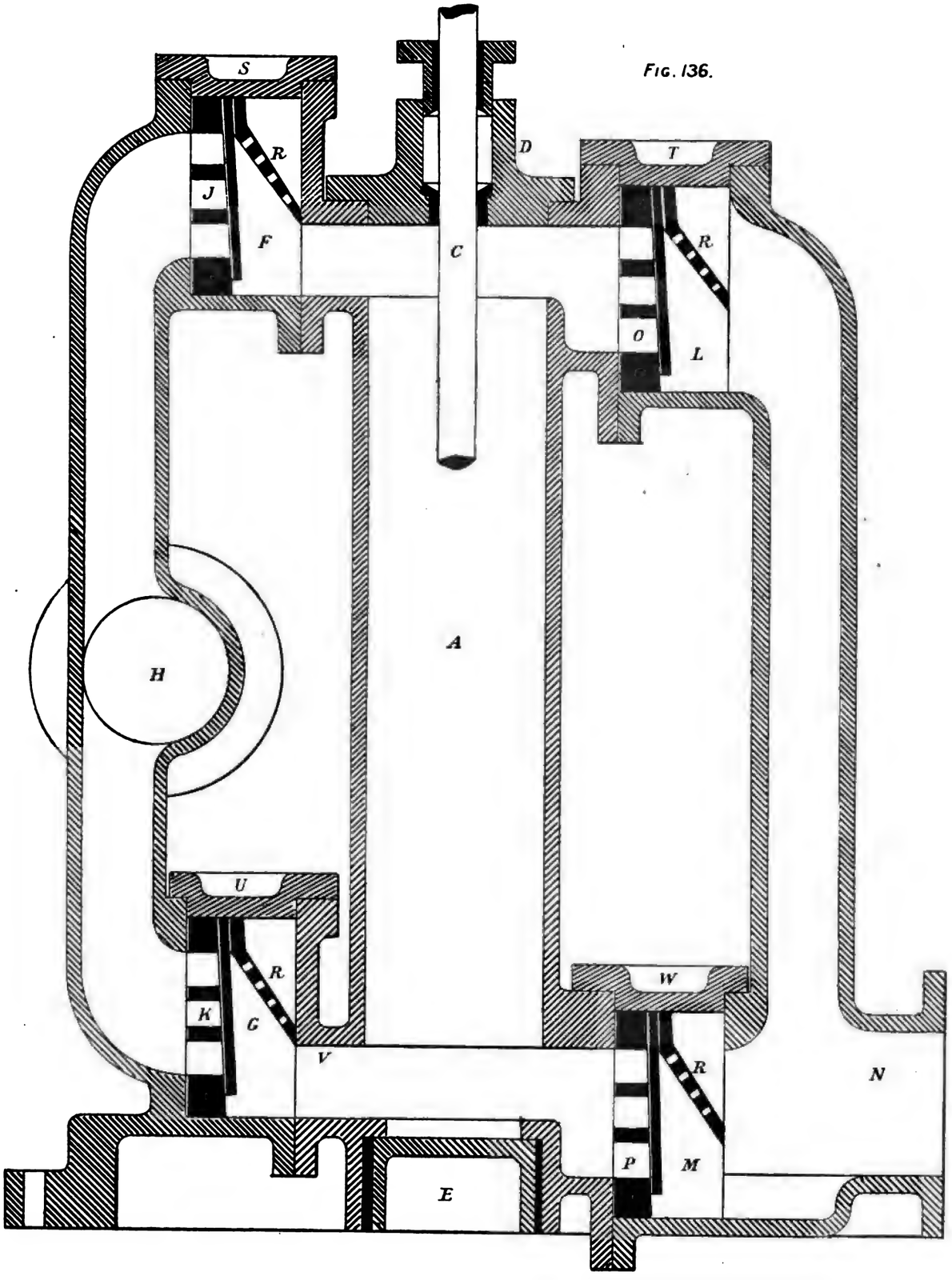

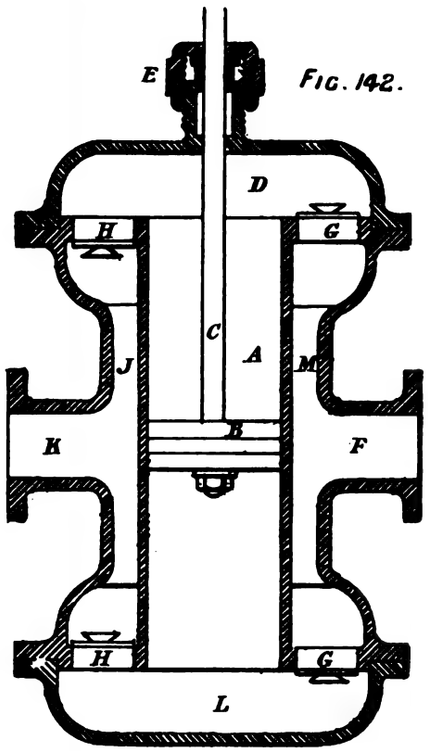

Fig. 142.

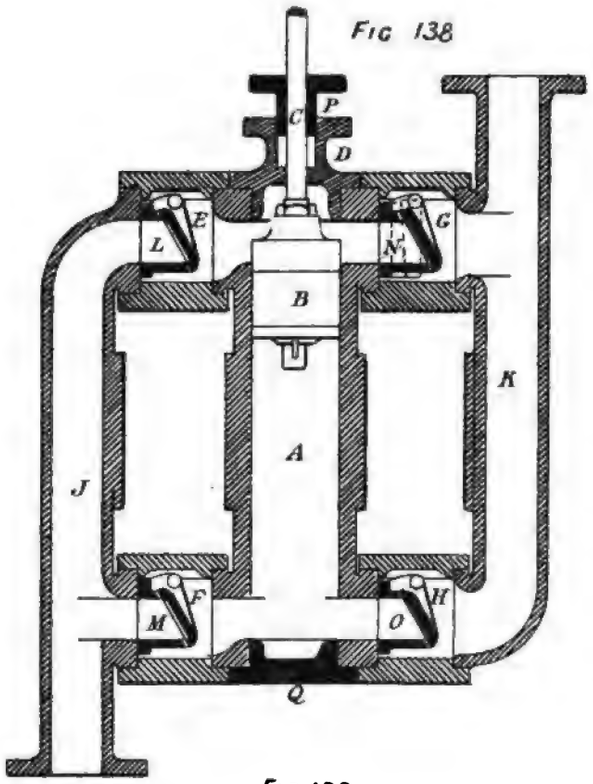

Fig 138

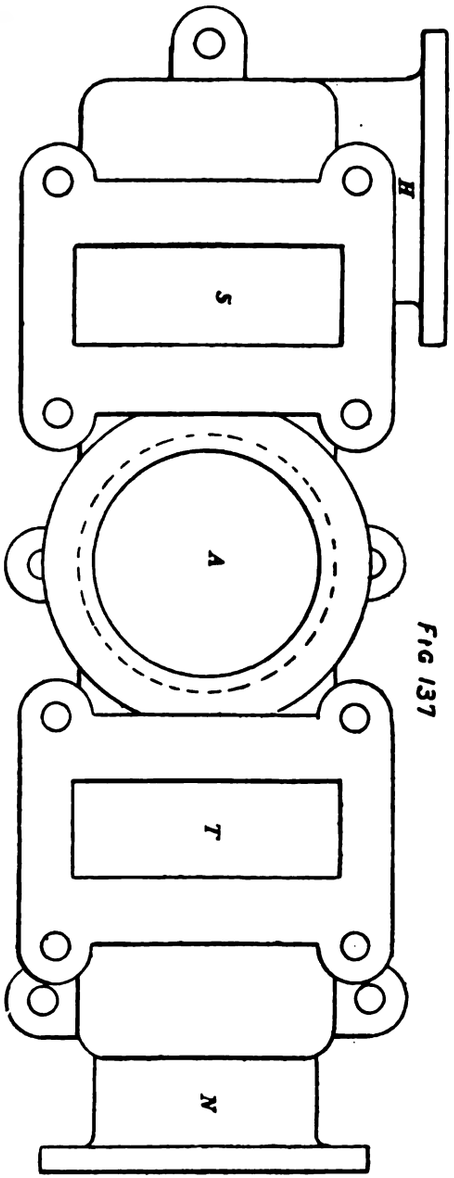

Fig 137

Fig. 143.

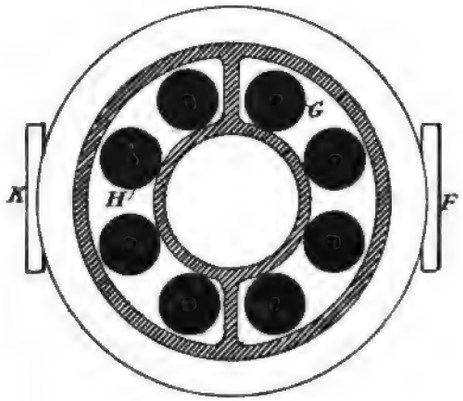

Fig. 139.

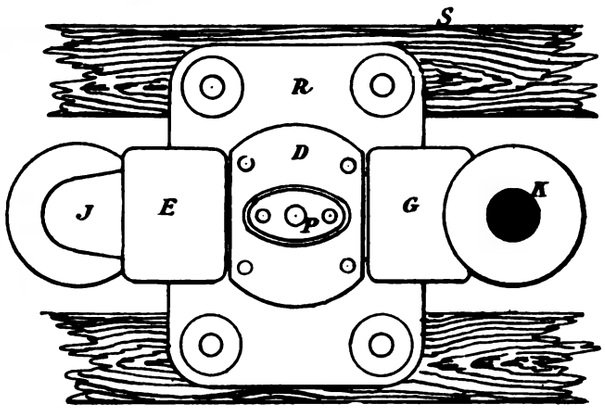

Plate XLVI.

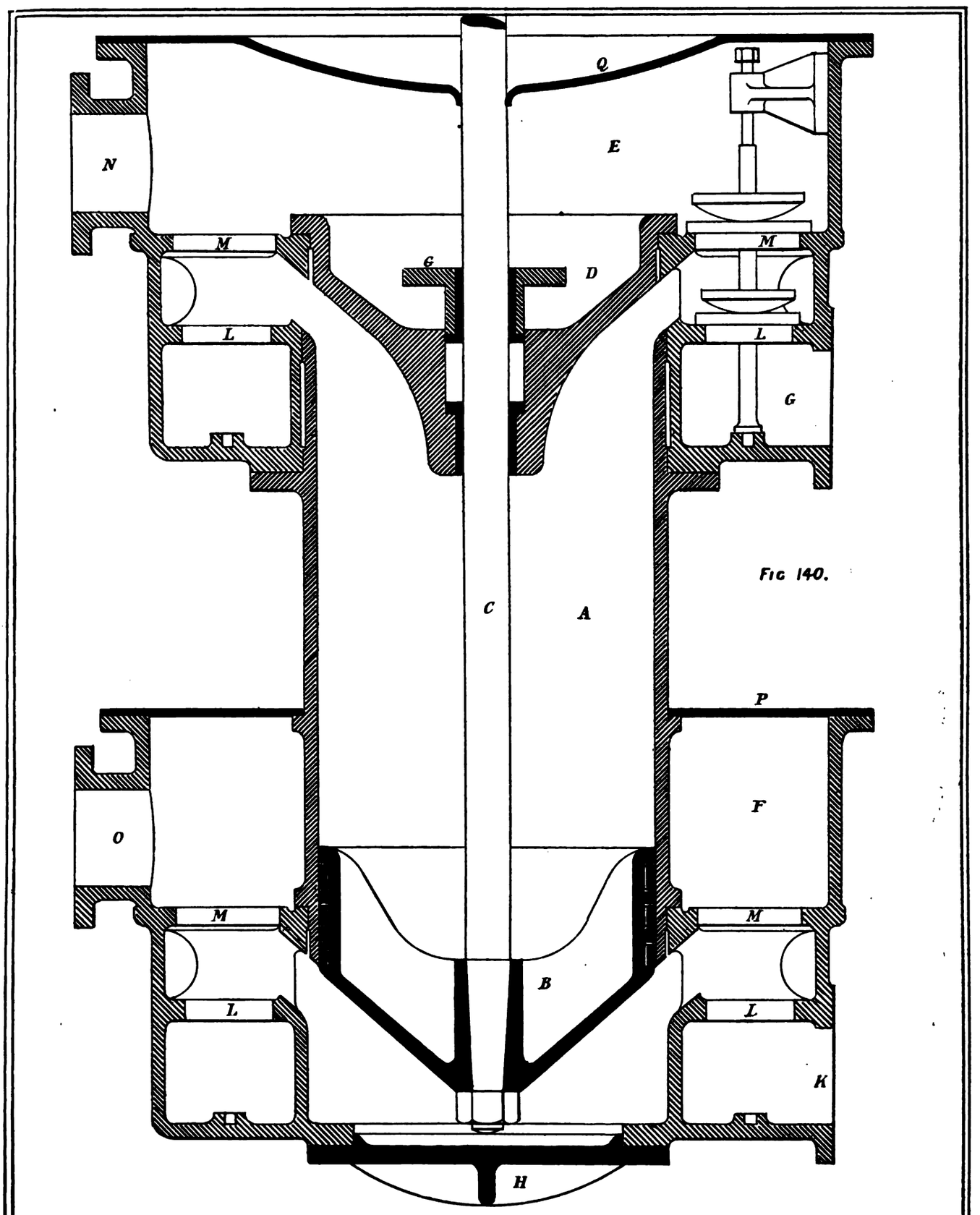

Fig 140.

Fig. 141.

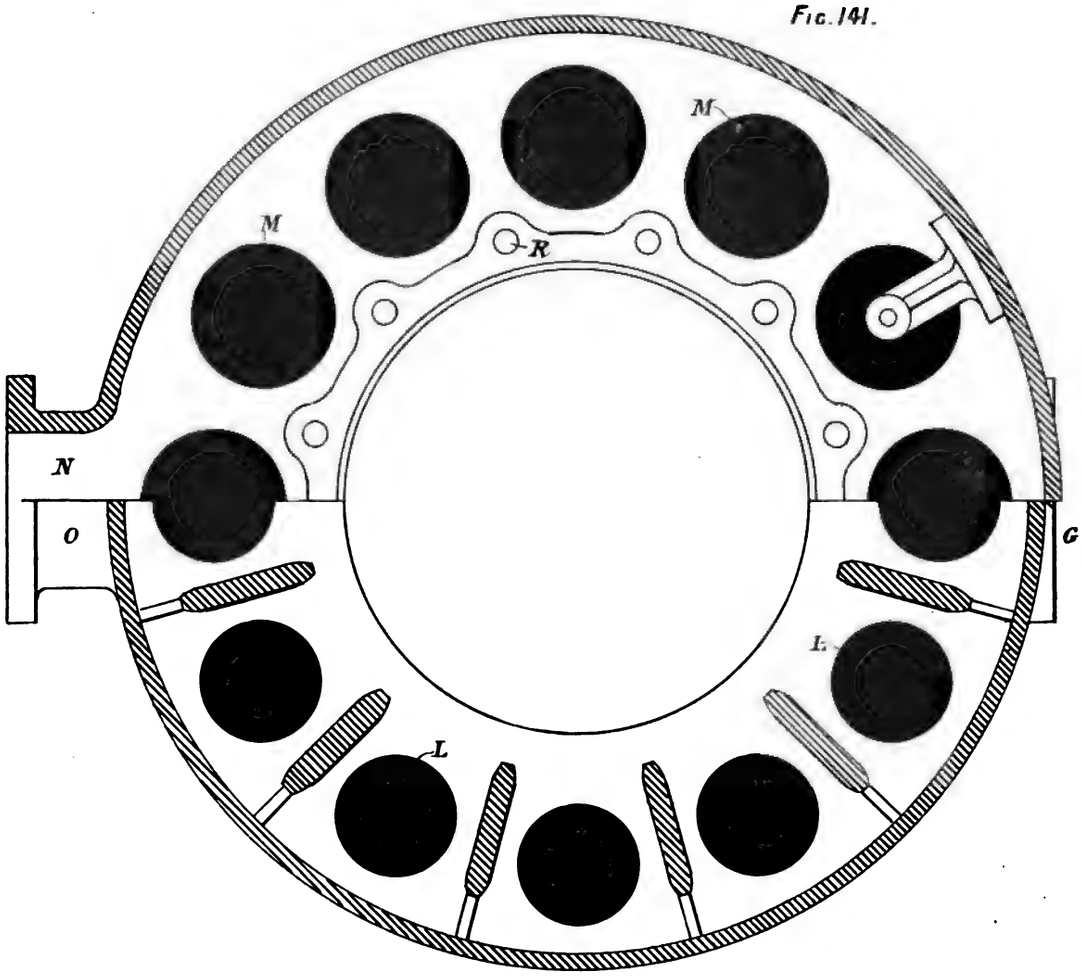

Fig. 144.

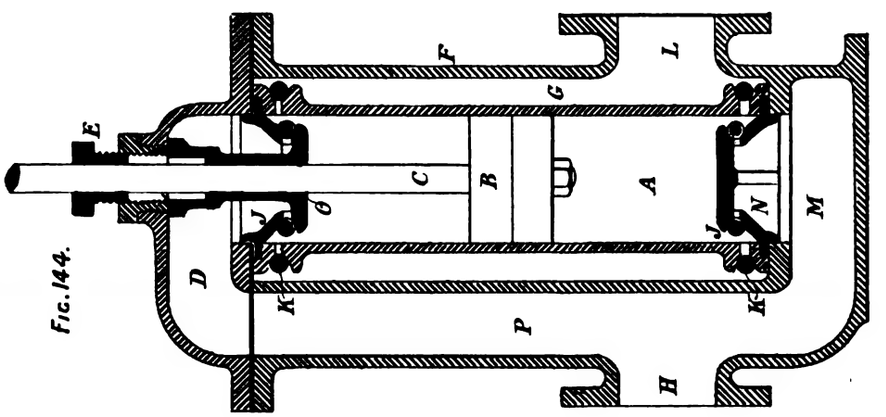

Fig. 145.

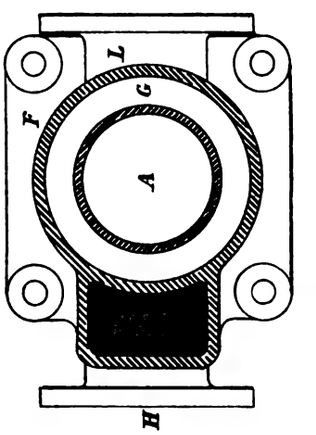

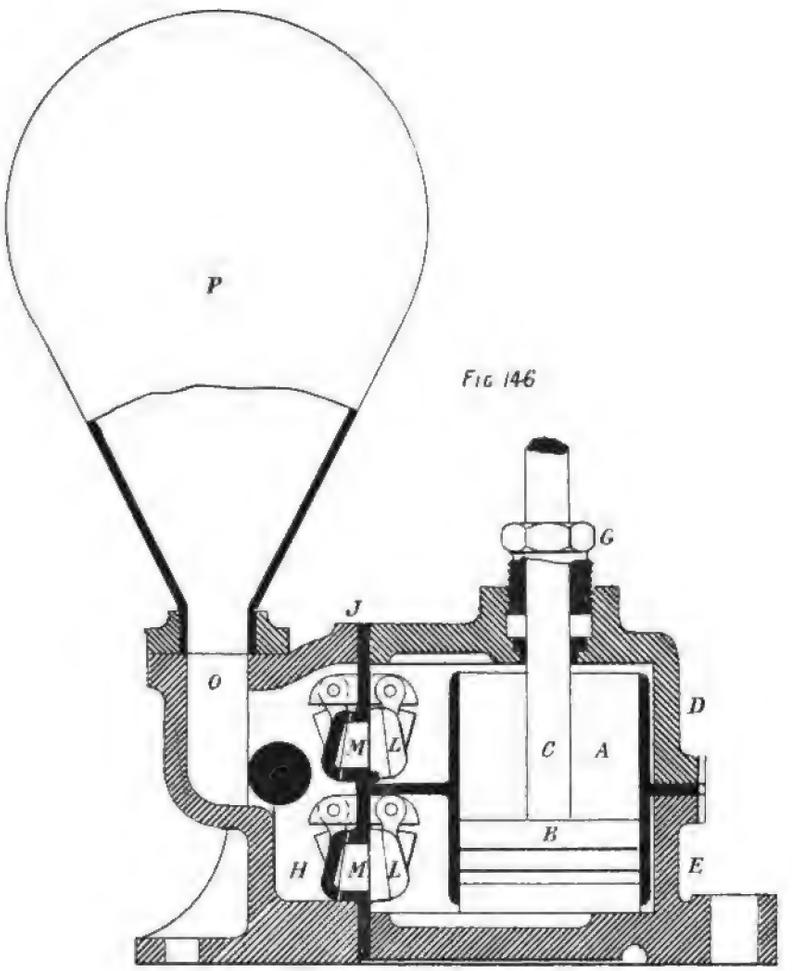

Fig 146

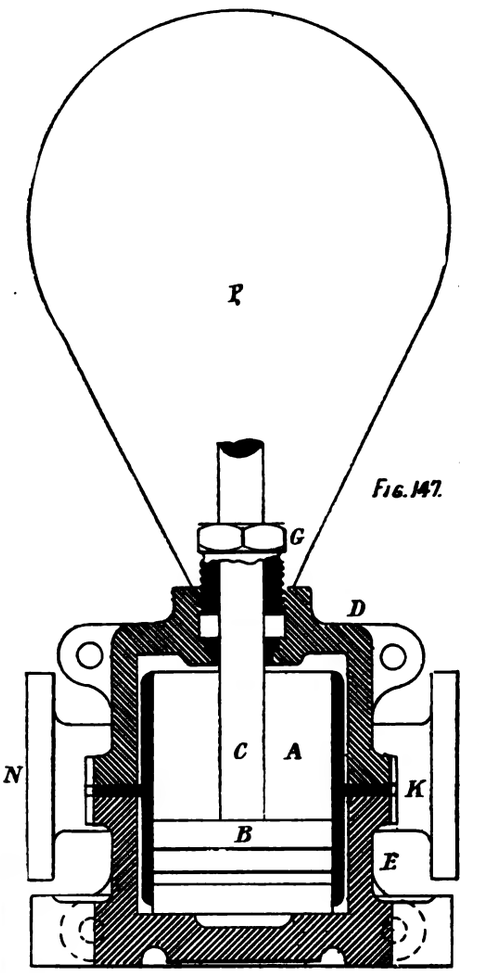

Fig. 147.

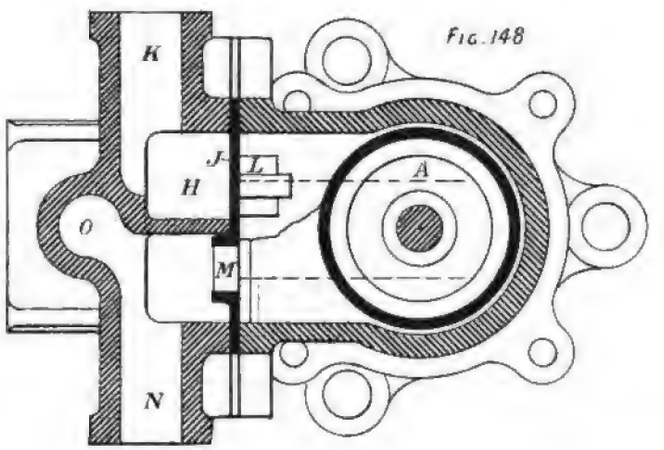

Fig. 148

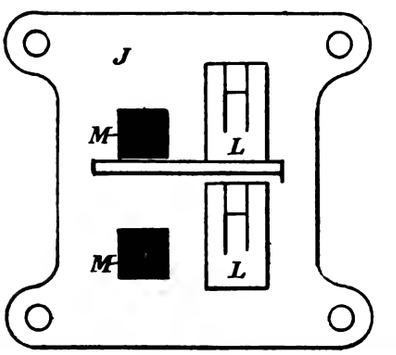

Fig. 149.

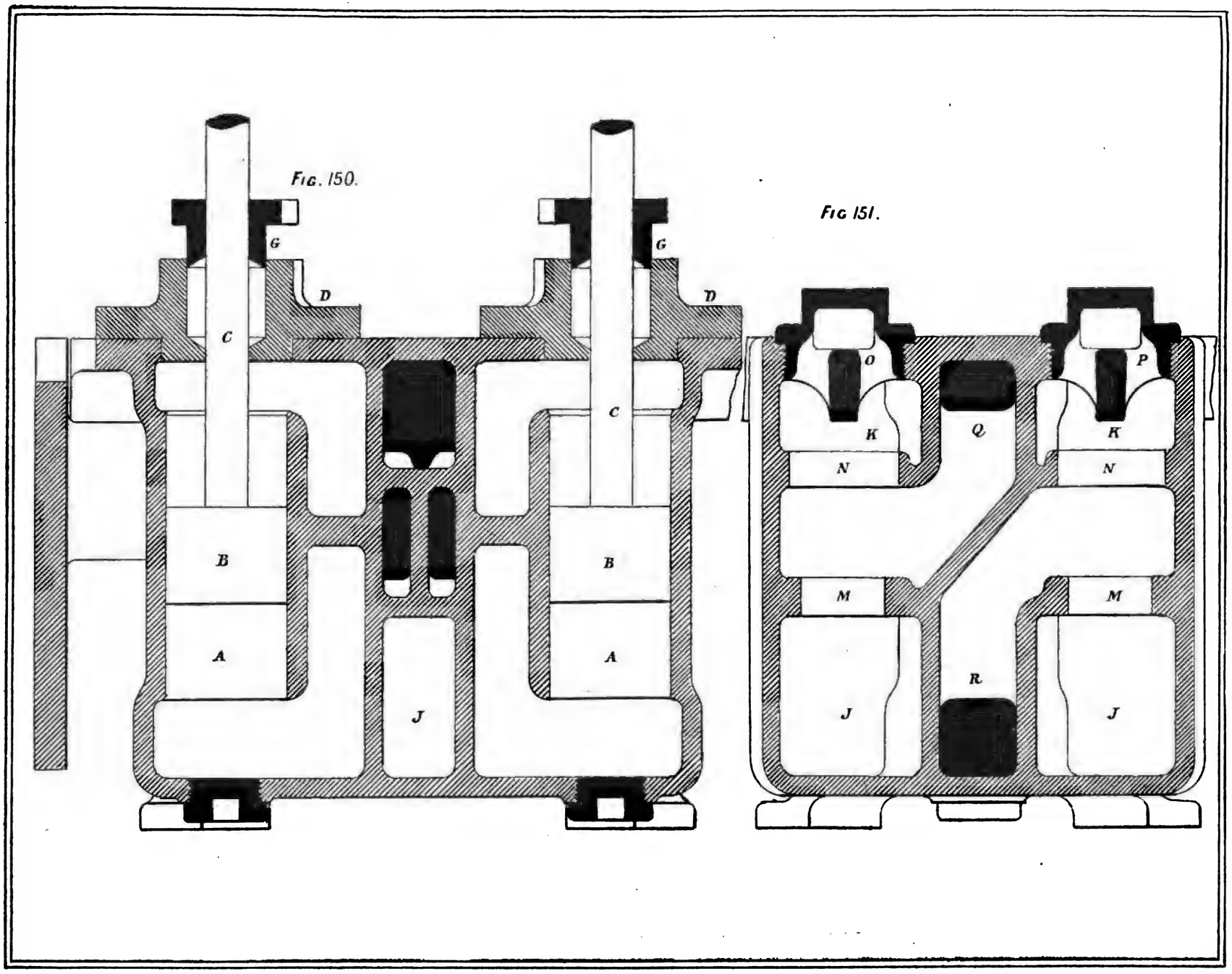

Plate L.

Fig 152

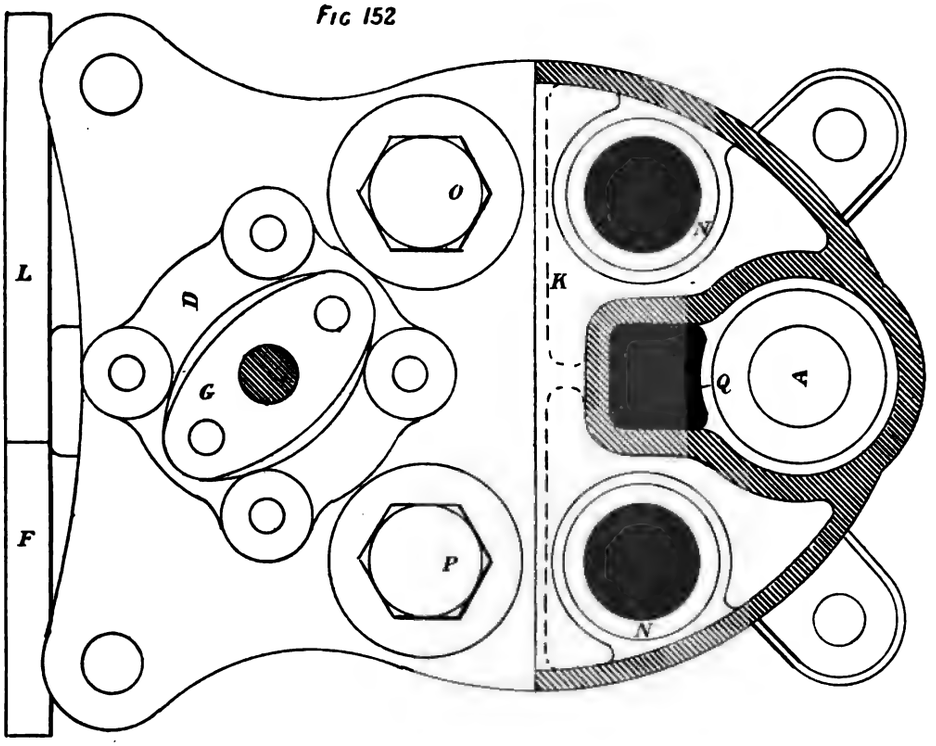

Fig.153

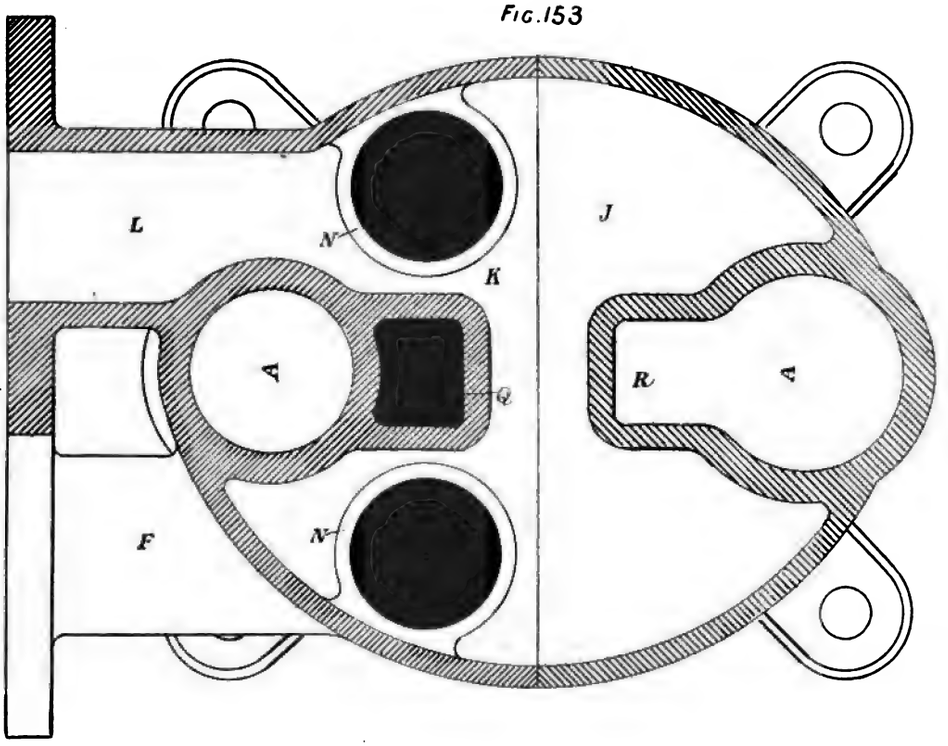

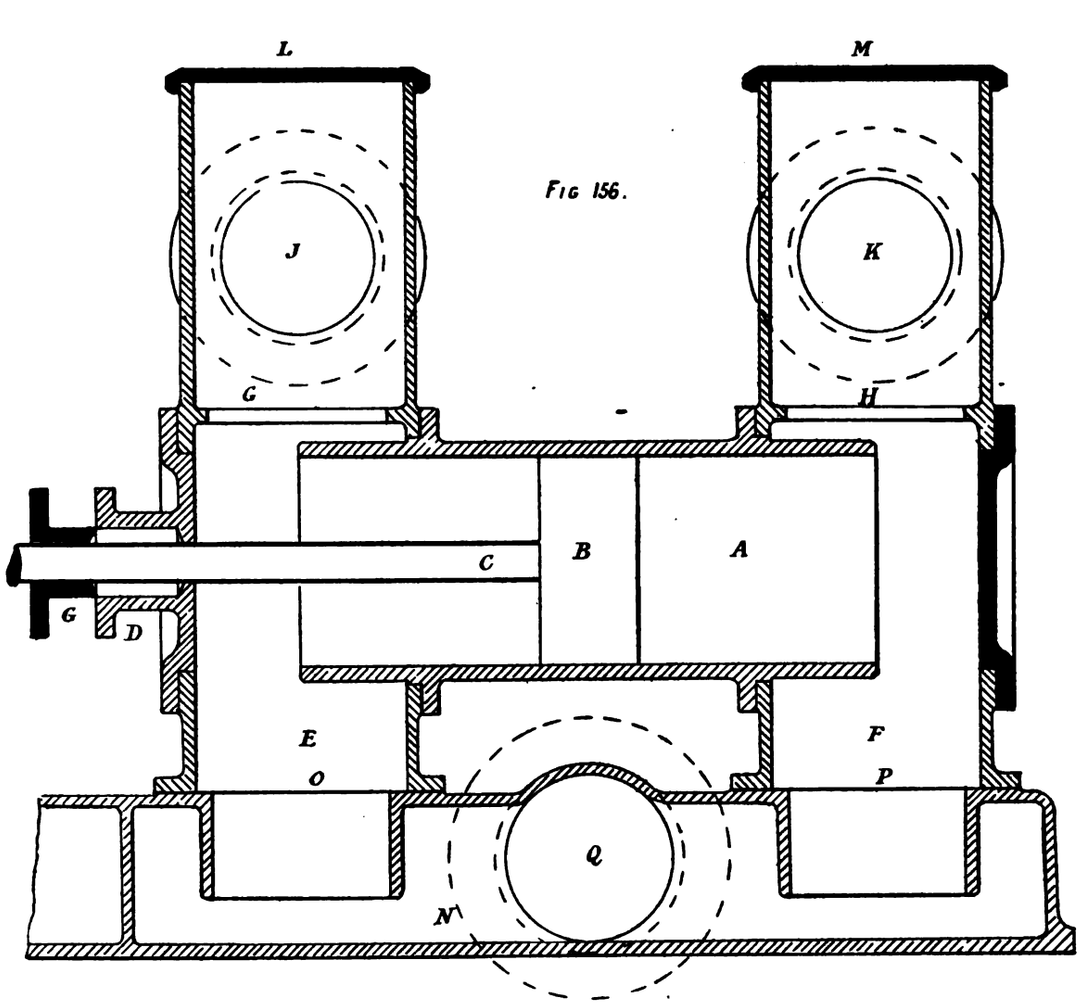

Fig 156.

Fig 157.

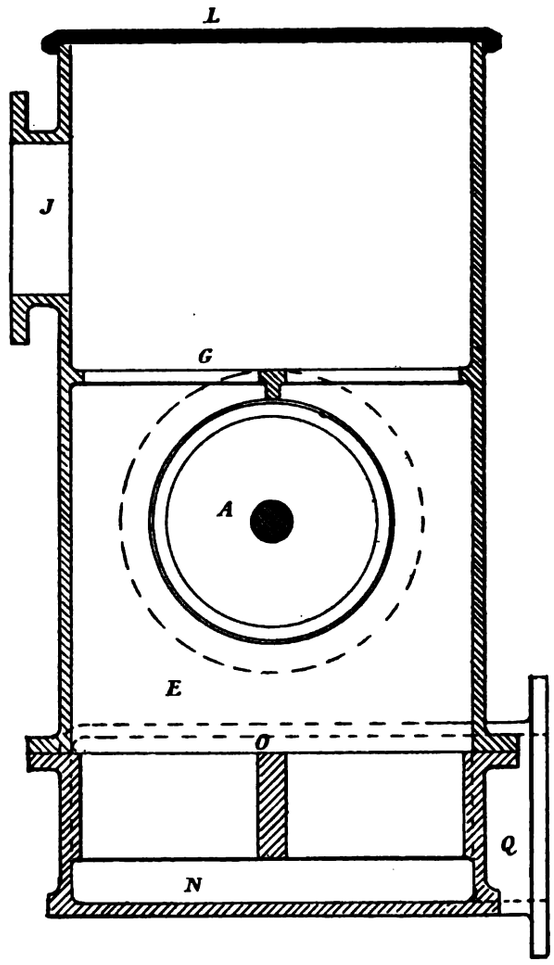

Plate LII

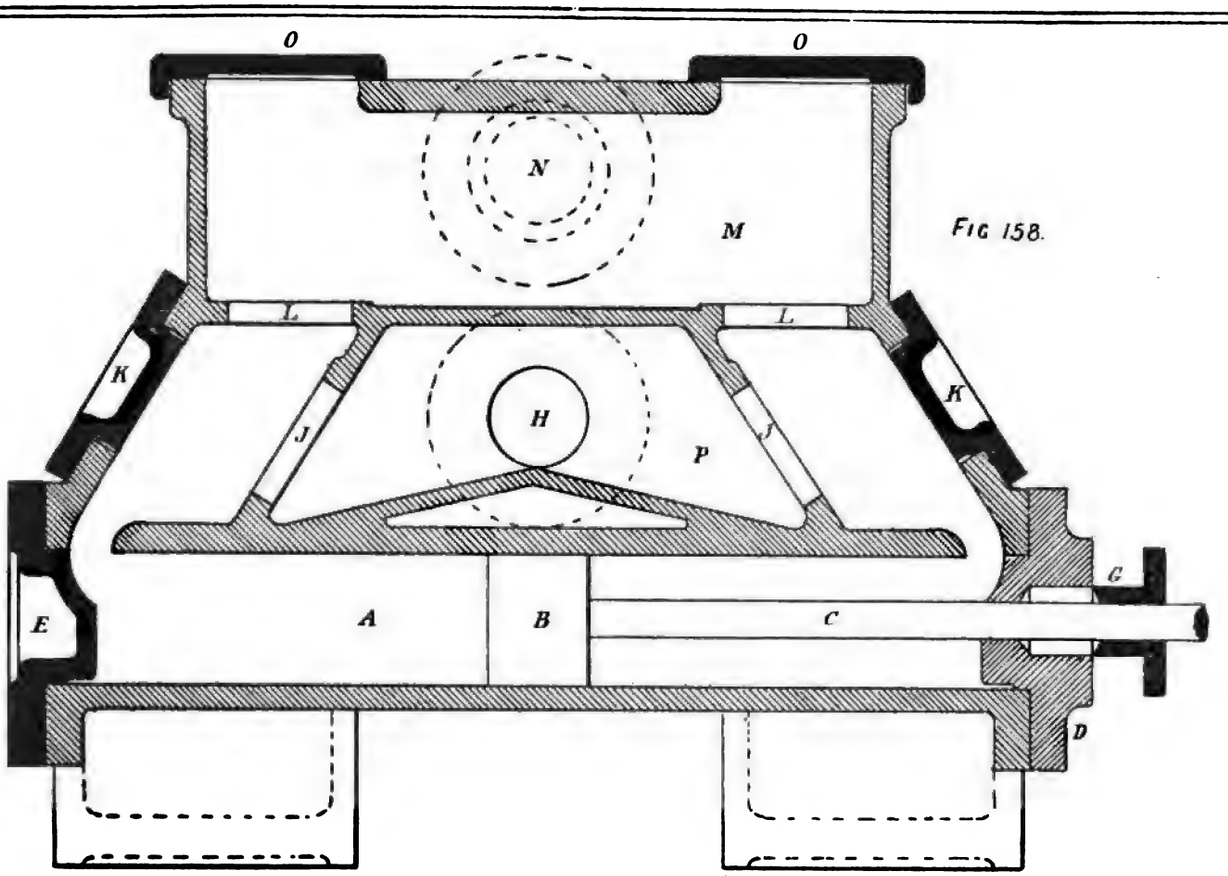

FIG 158.

FIG.160.

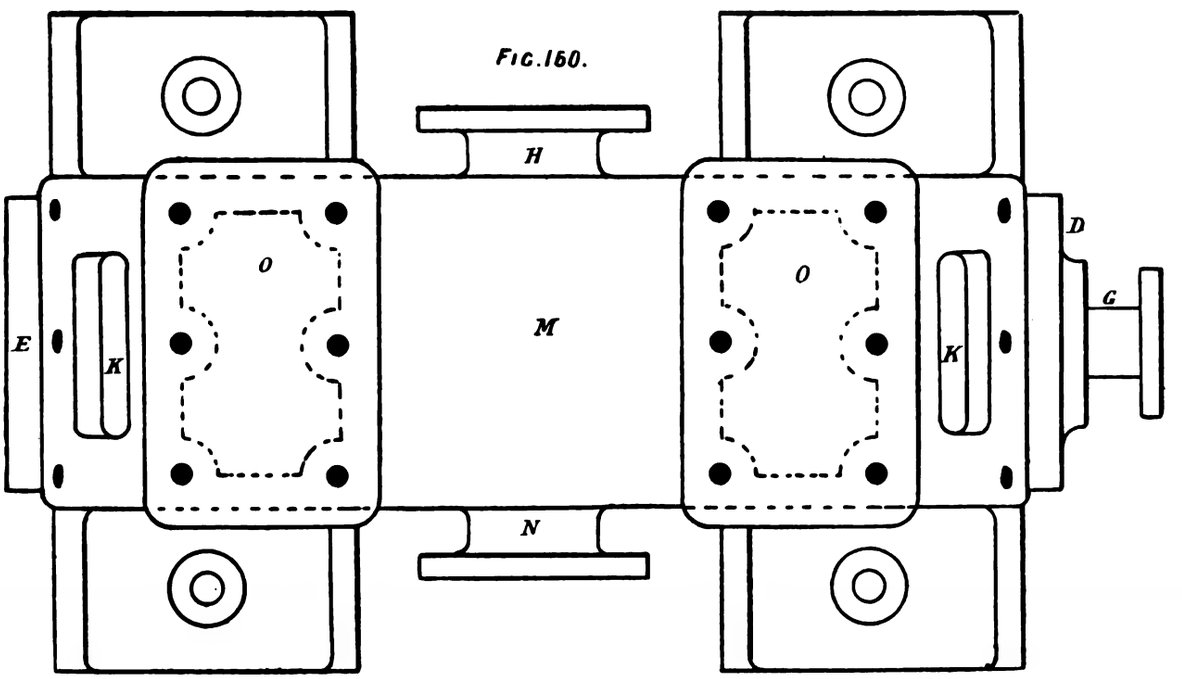

Fig. 154.

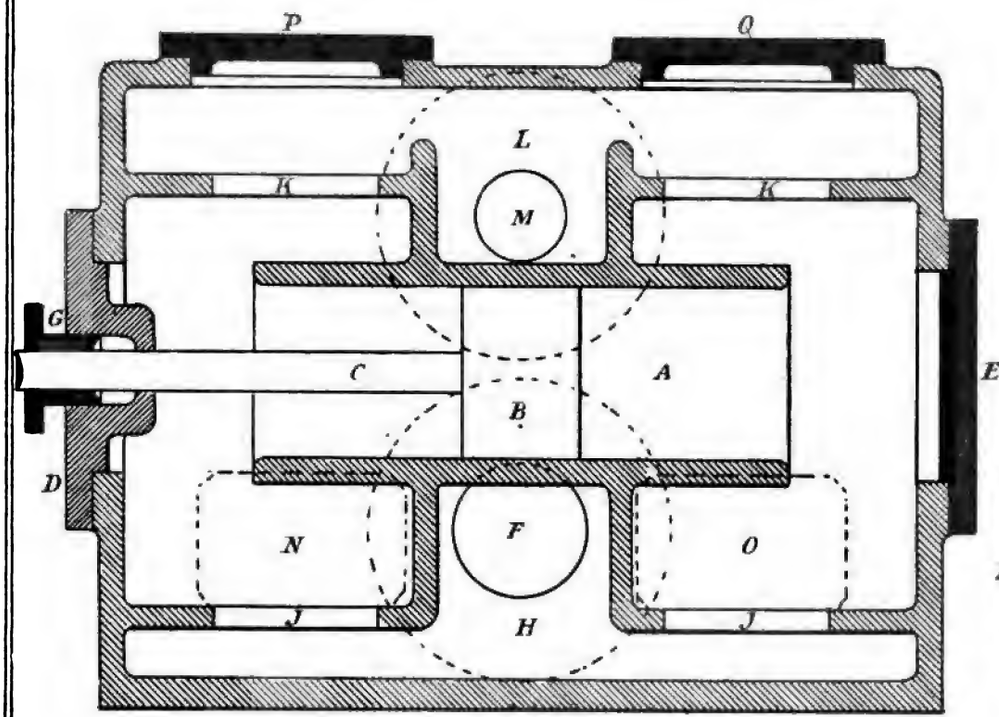

Fig 155

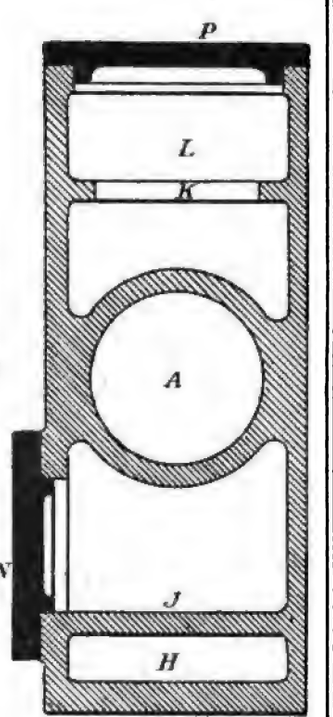

Fig. 159.

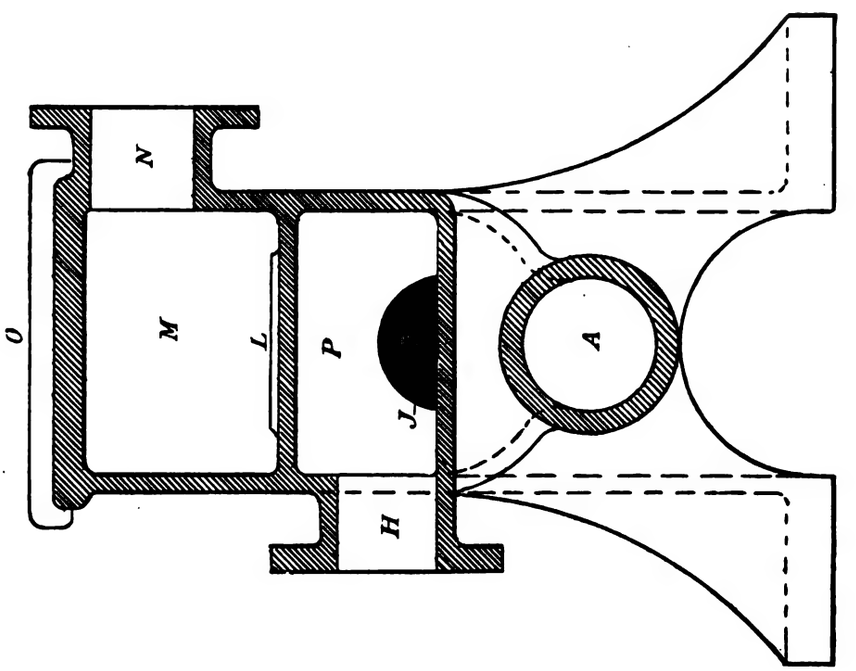

Fig.161.

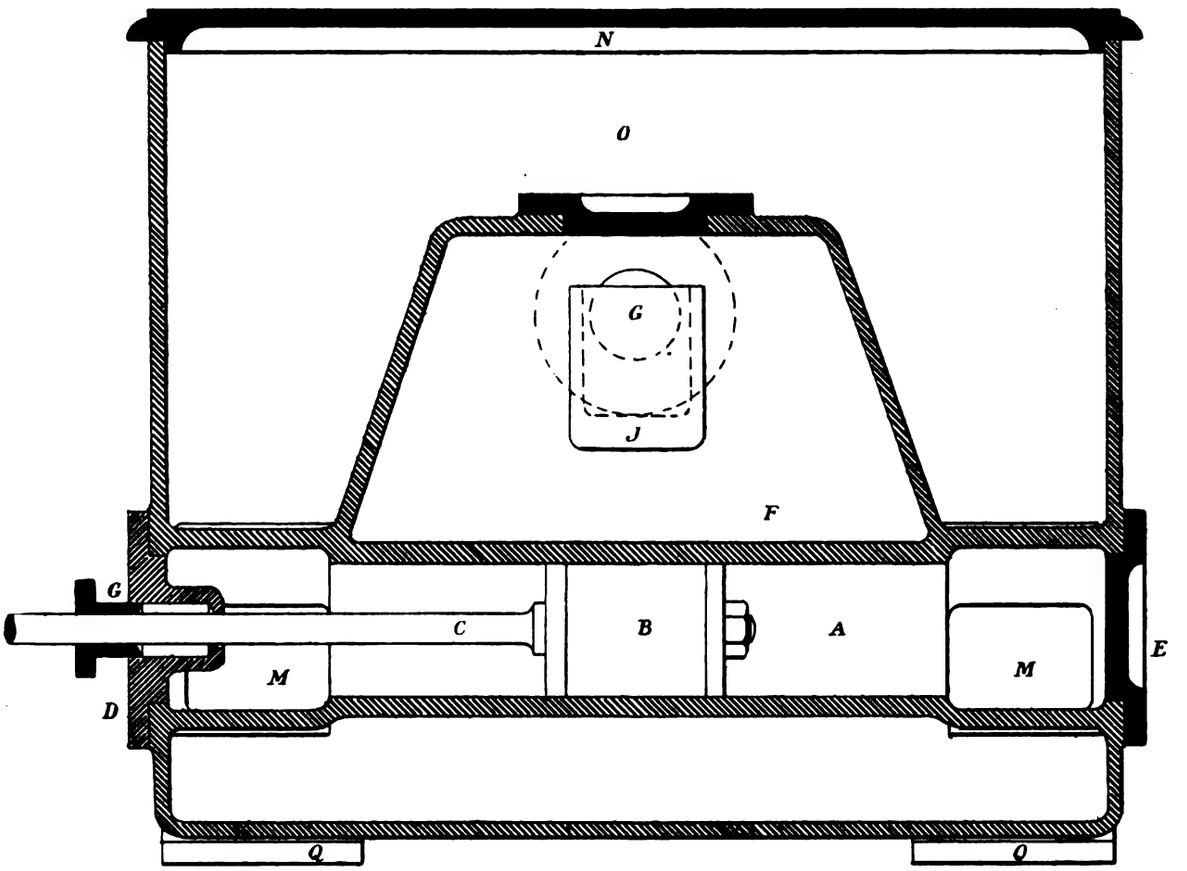

Fig.162

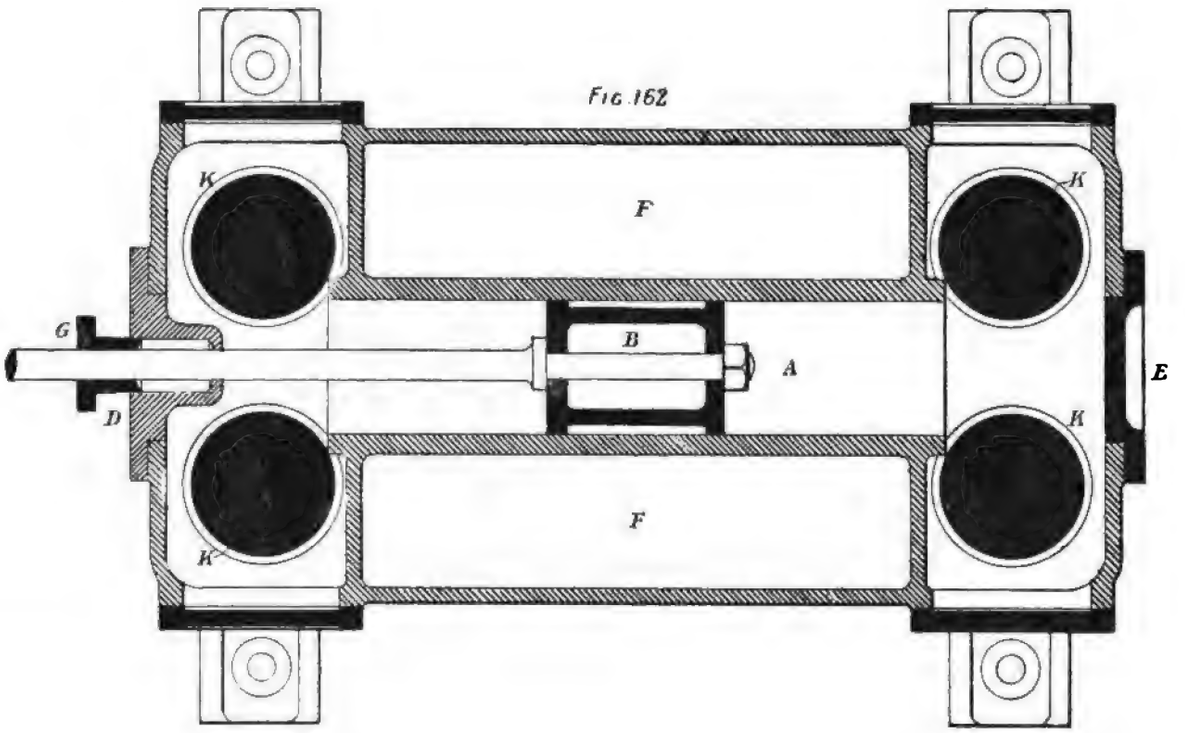

Fig 163.

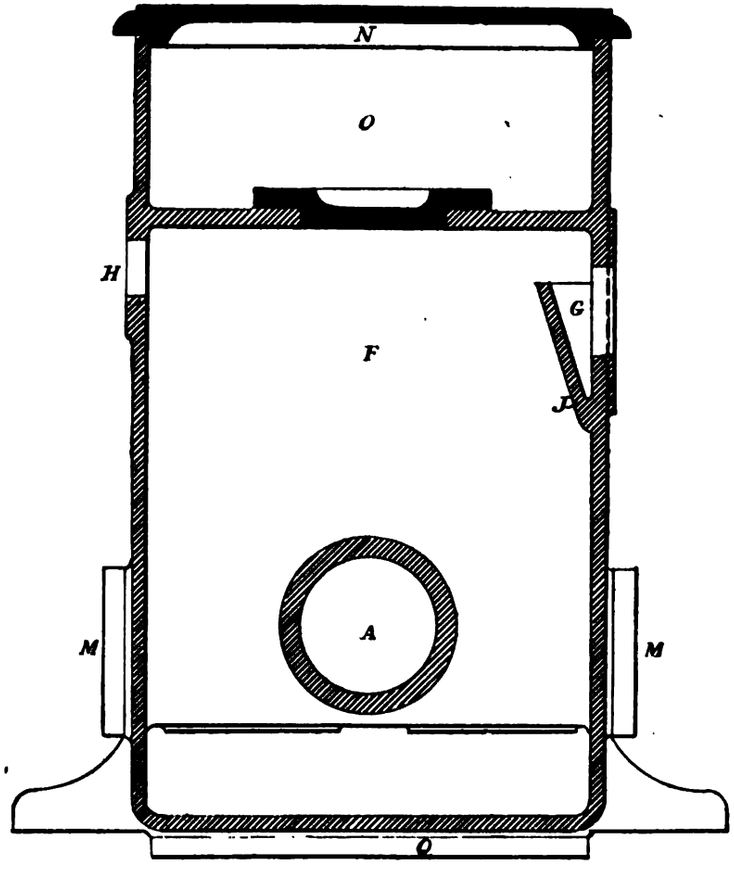

Fig 164.

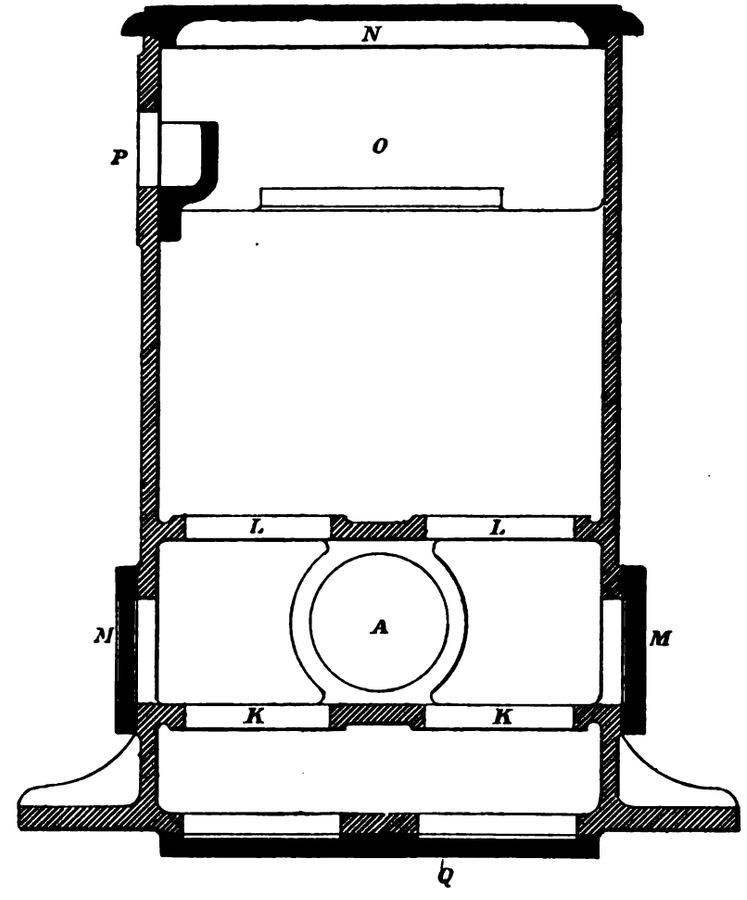

Plate LVI.

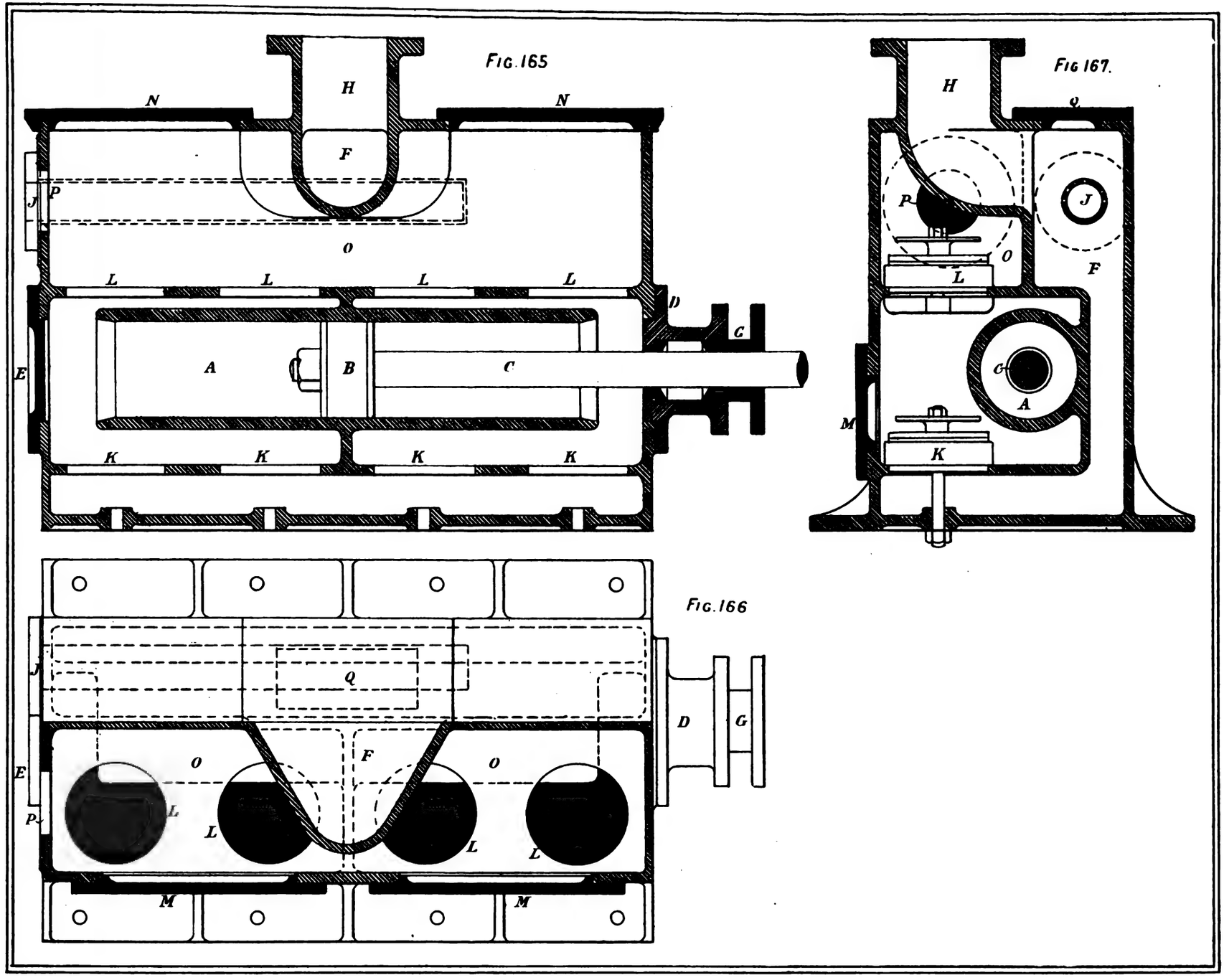
Fig. 165
H
N
N
F
J
P
O
L
L
L
L
D
G
E
A
B
C
K
K
K
K
Fig 167.
H
Q
P
J
O
F
L
G
A
M
K
Fig. 166
J
Q
D
G
E
O
F
O
P
L
L
L
L
M
M

Plate LVII.

Fig. 168.

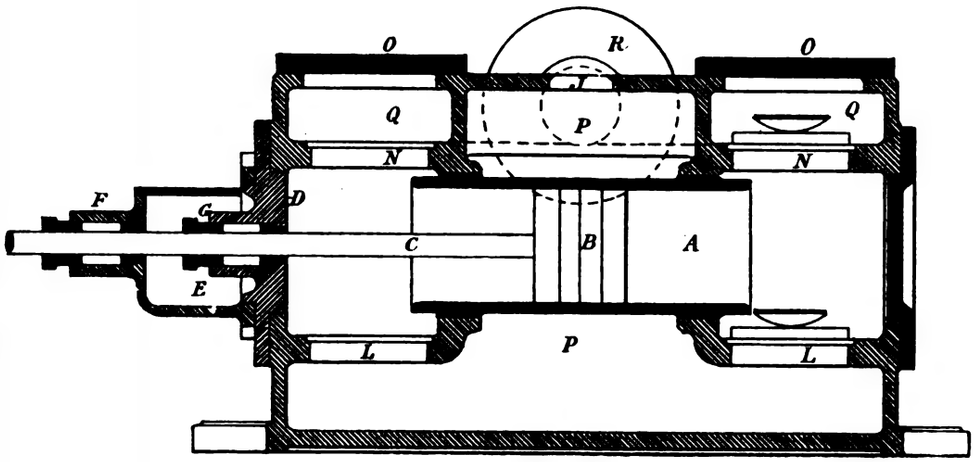

Fig. 171.

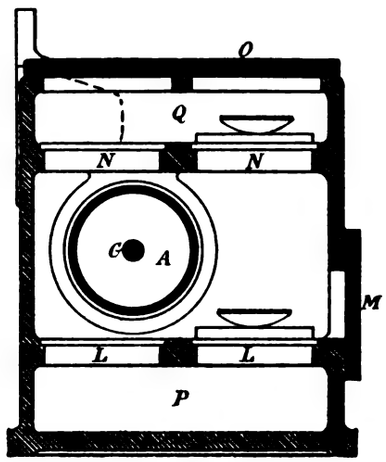

Fig. 169.

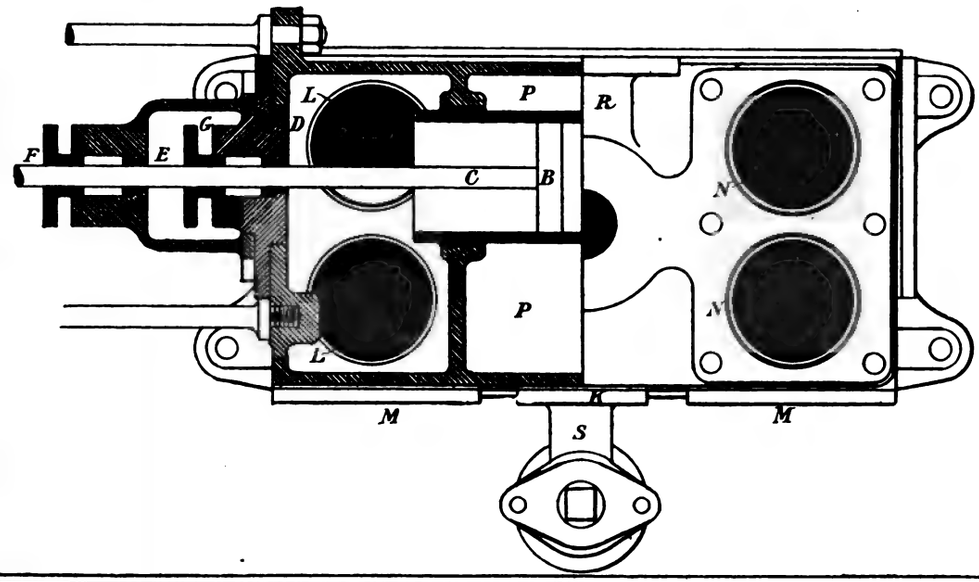

Fig. 170.

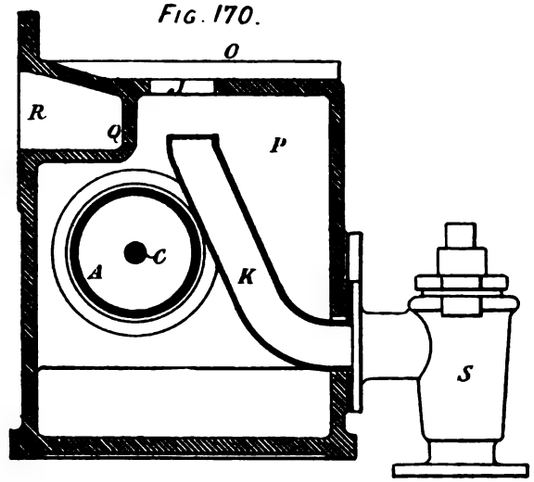

Plate LVIII.

Fig. 174.

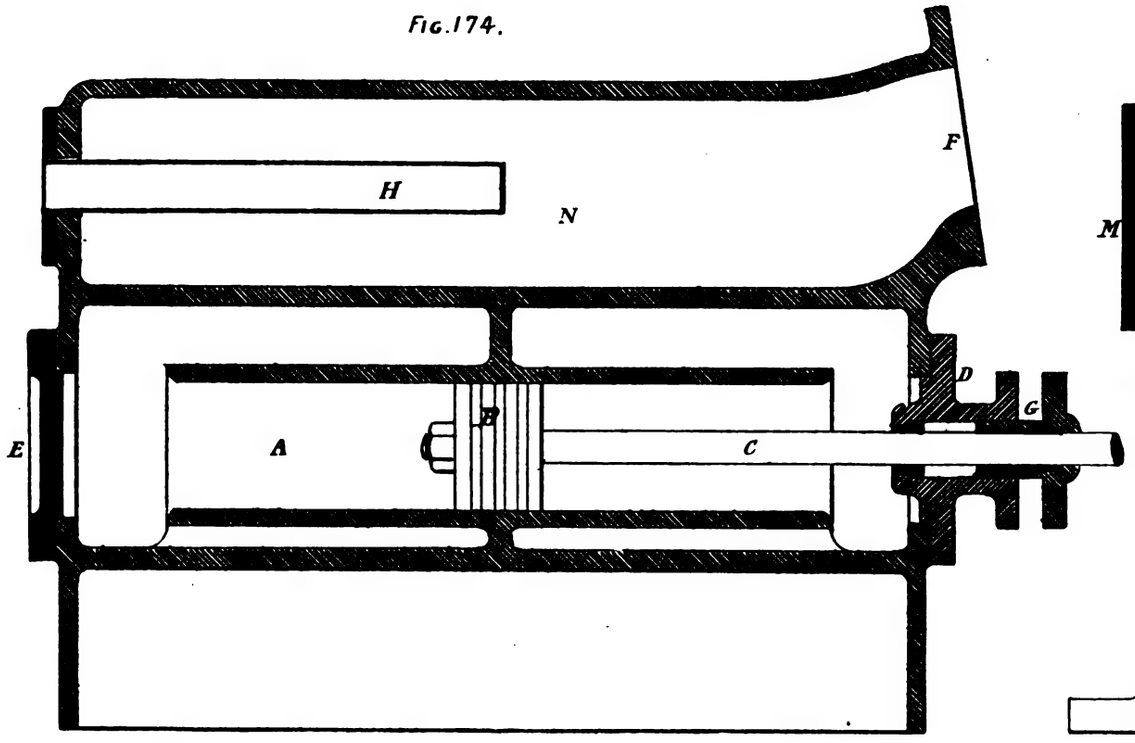

Fig 176.

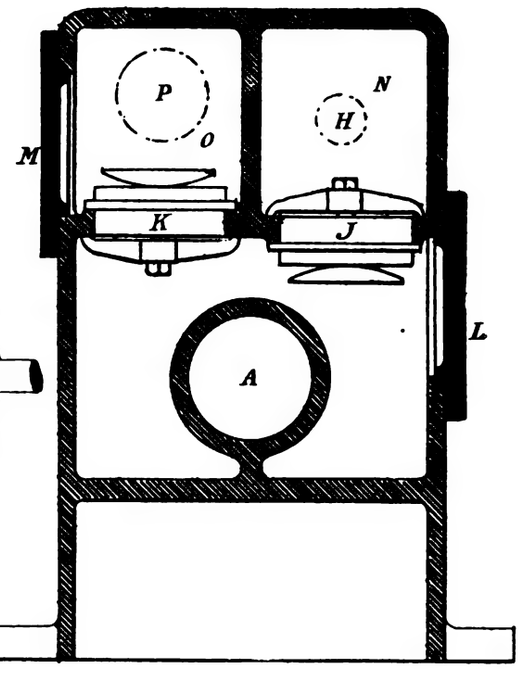

Fig 175

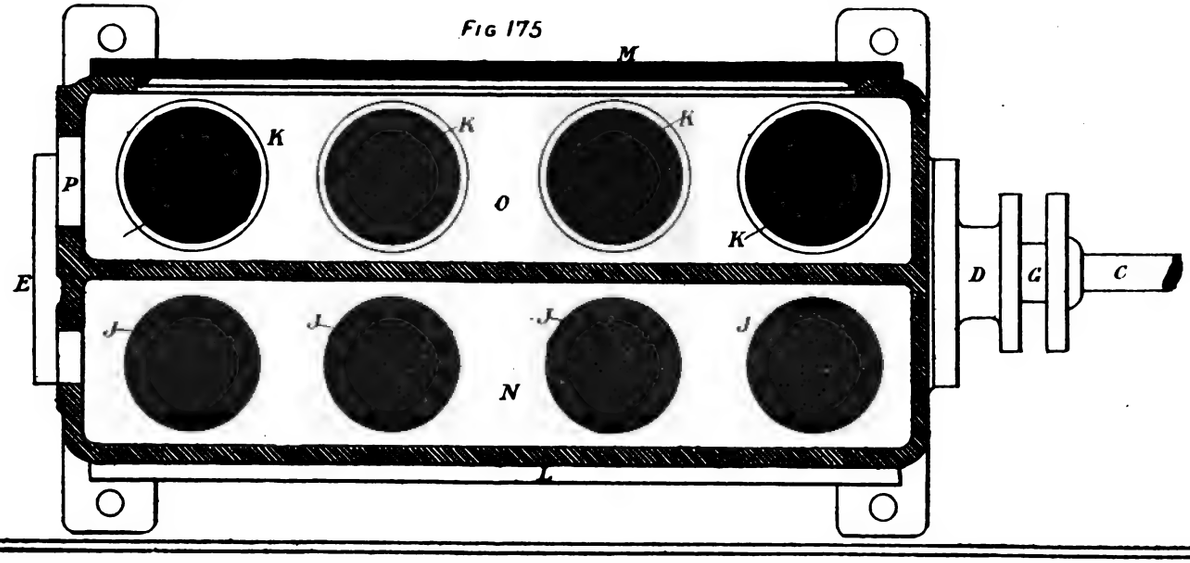

Plate LIX

Fig. 172.

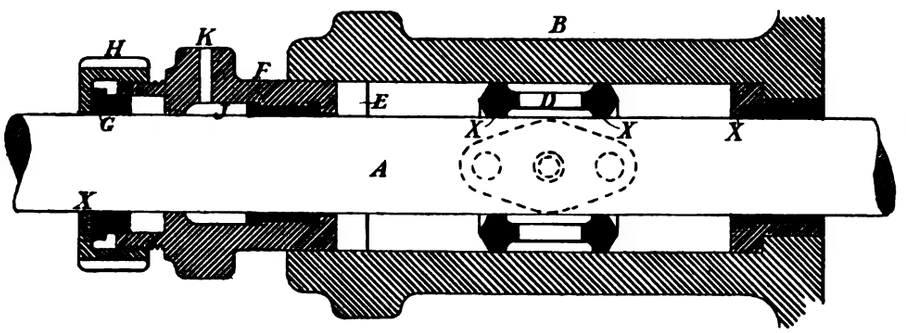

Fig 173.

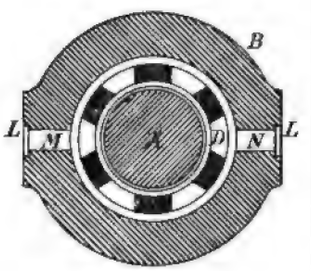

Fig. 177.

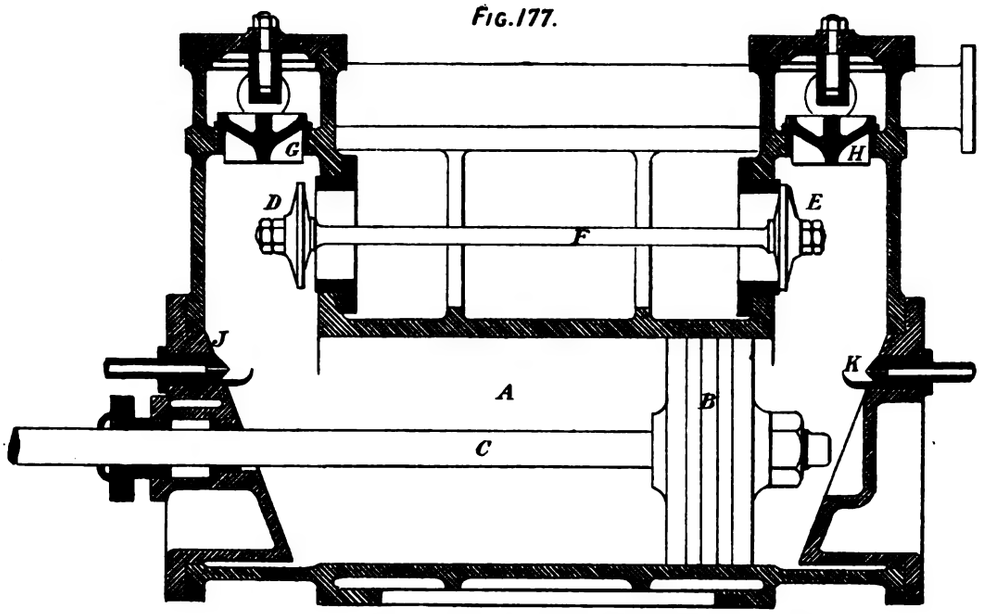

Fig. 178

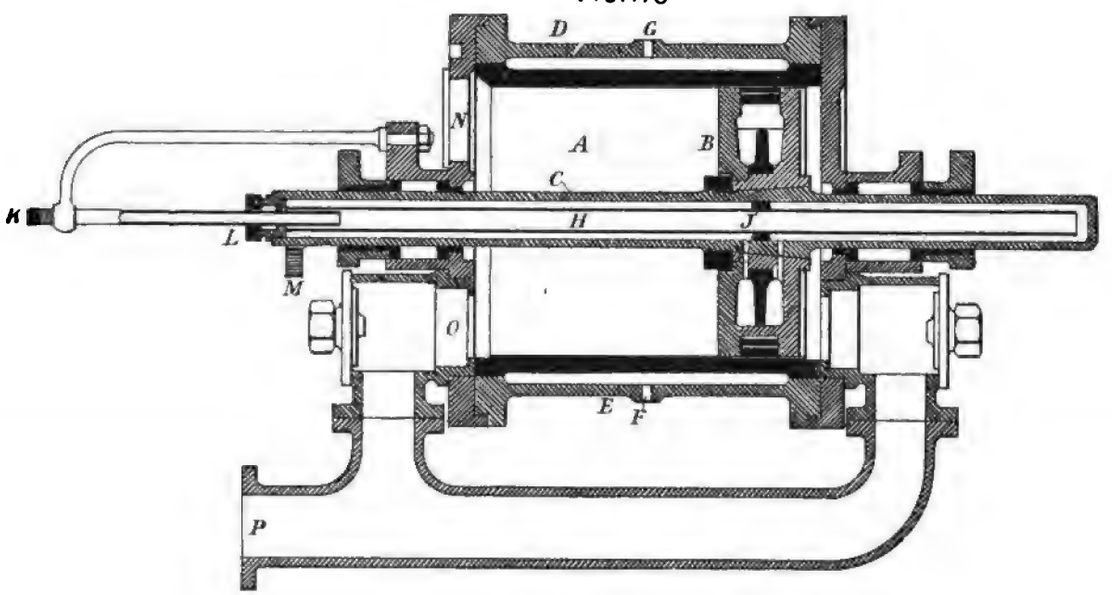

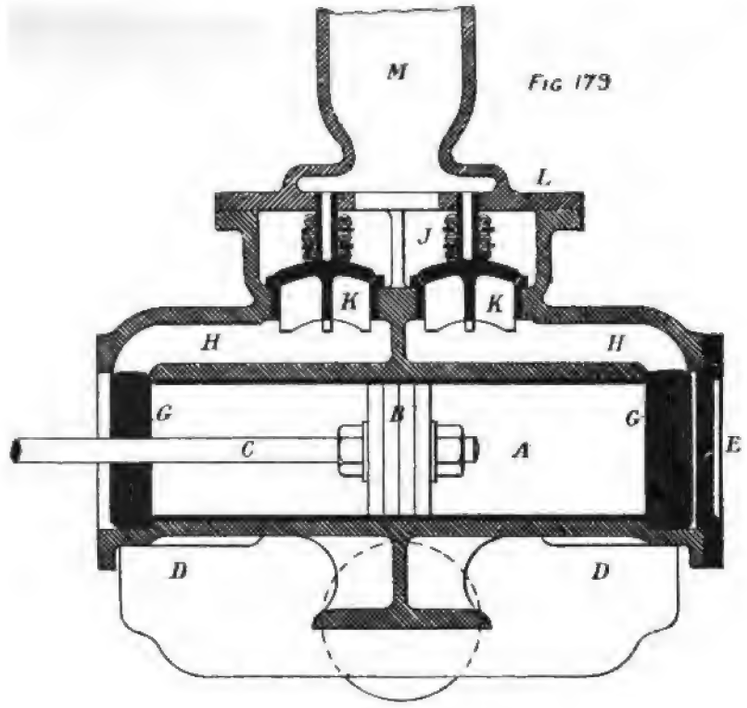

Fig 179

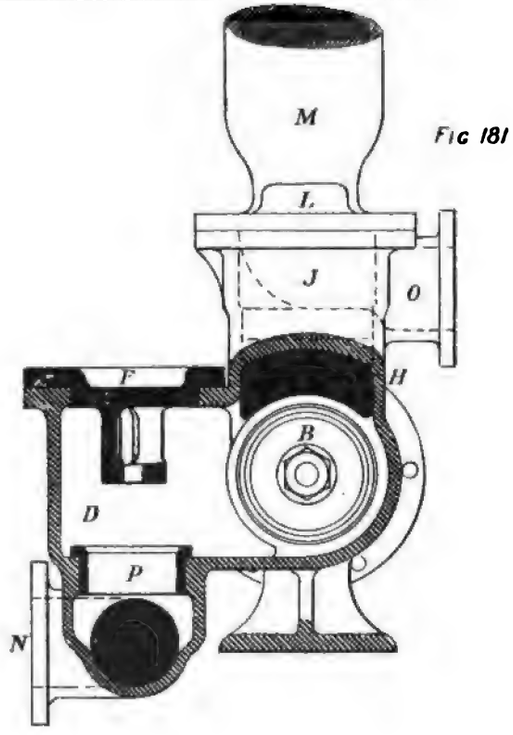

Fig 181

Fig 180.

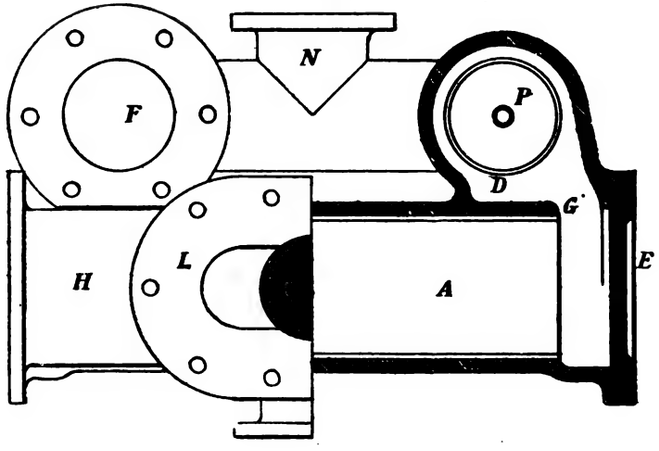

Plate. LXI.

Fig 182.

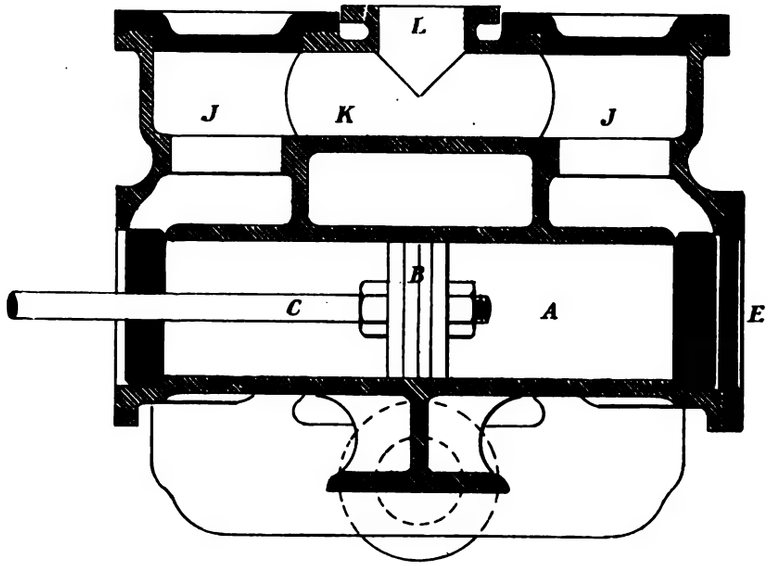

Fig 183

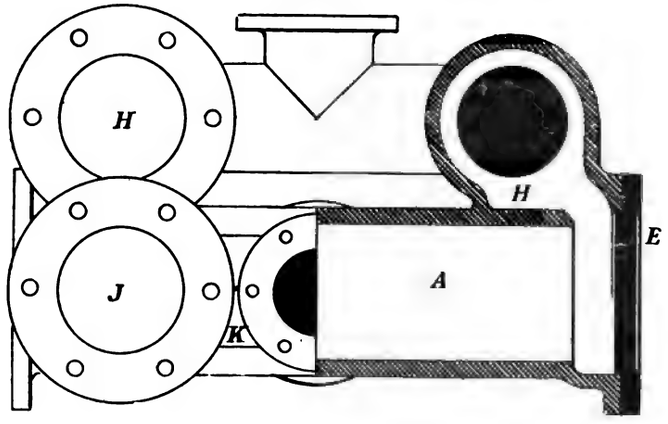

Fig. 184.

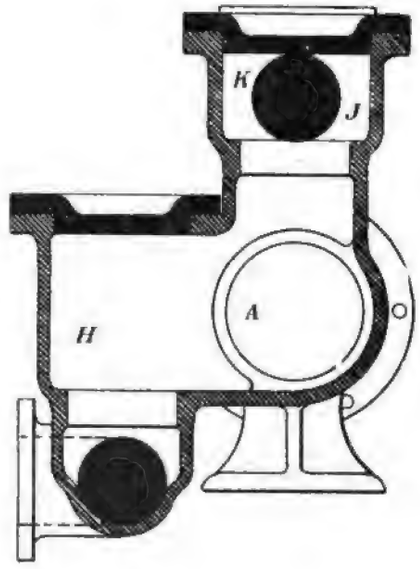

Plate LXII.

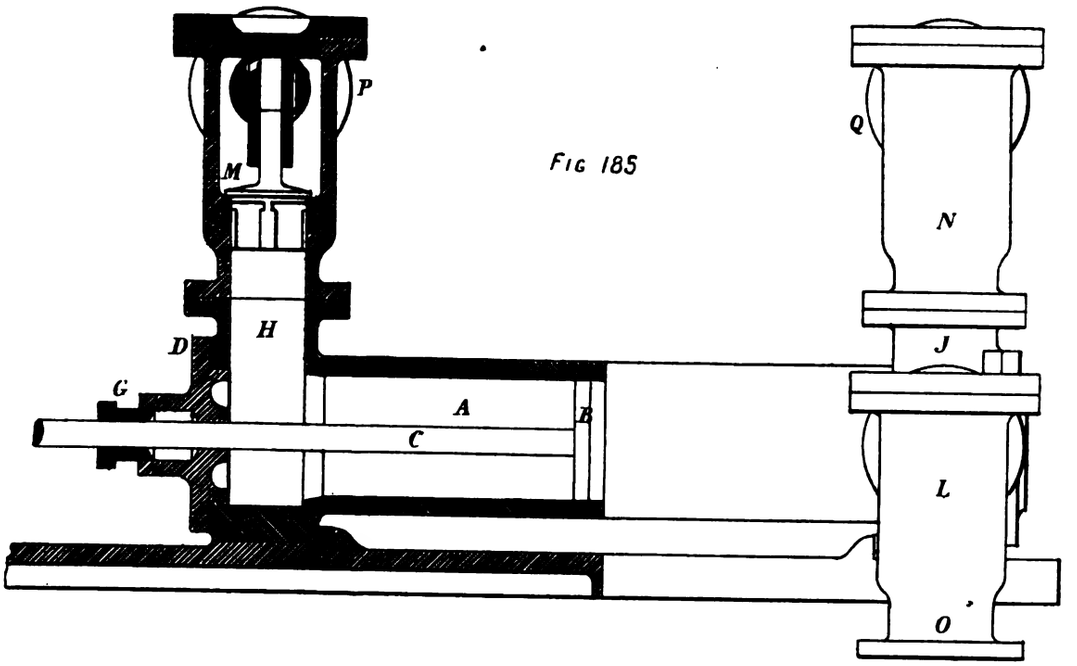

Fig 185

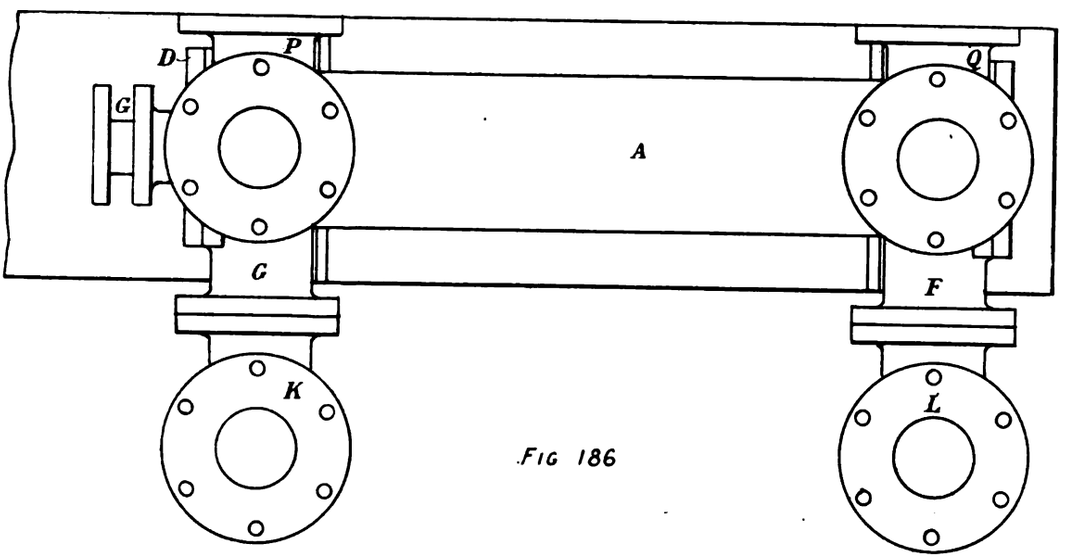

Fig 186

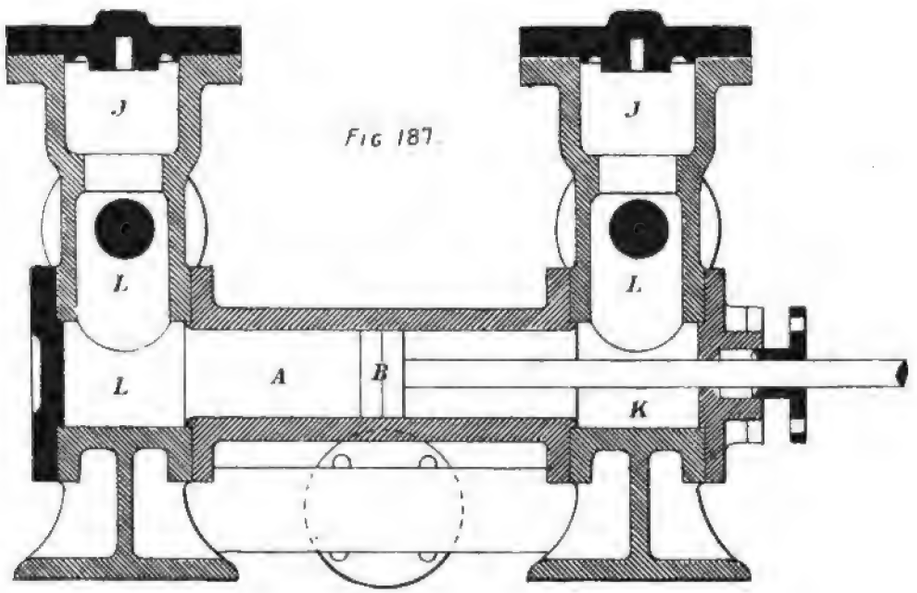

Fig 187.

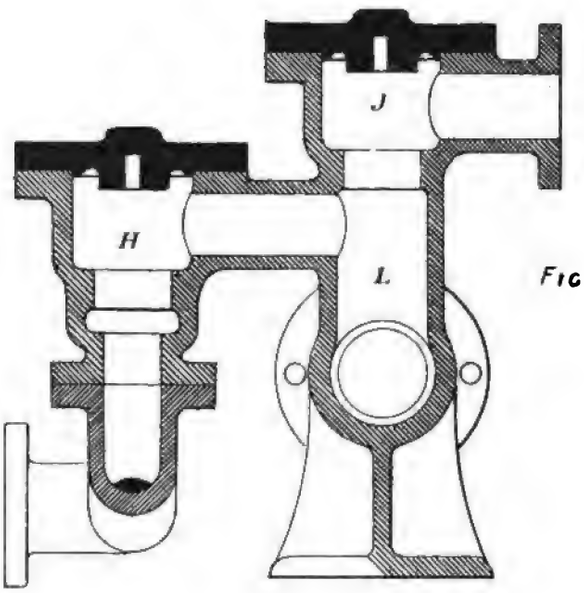

Fig. 188.

Fig. 189.

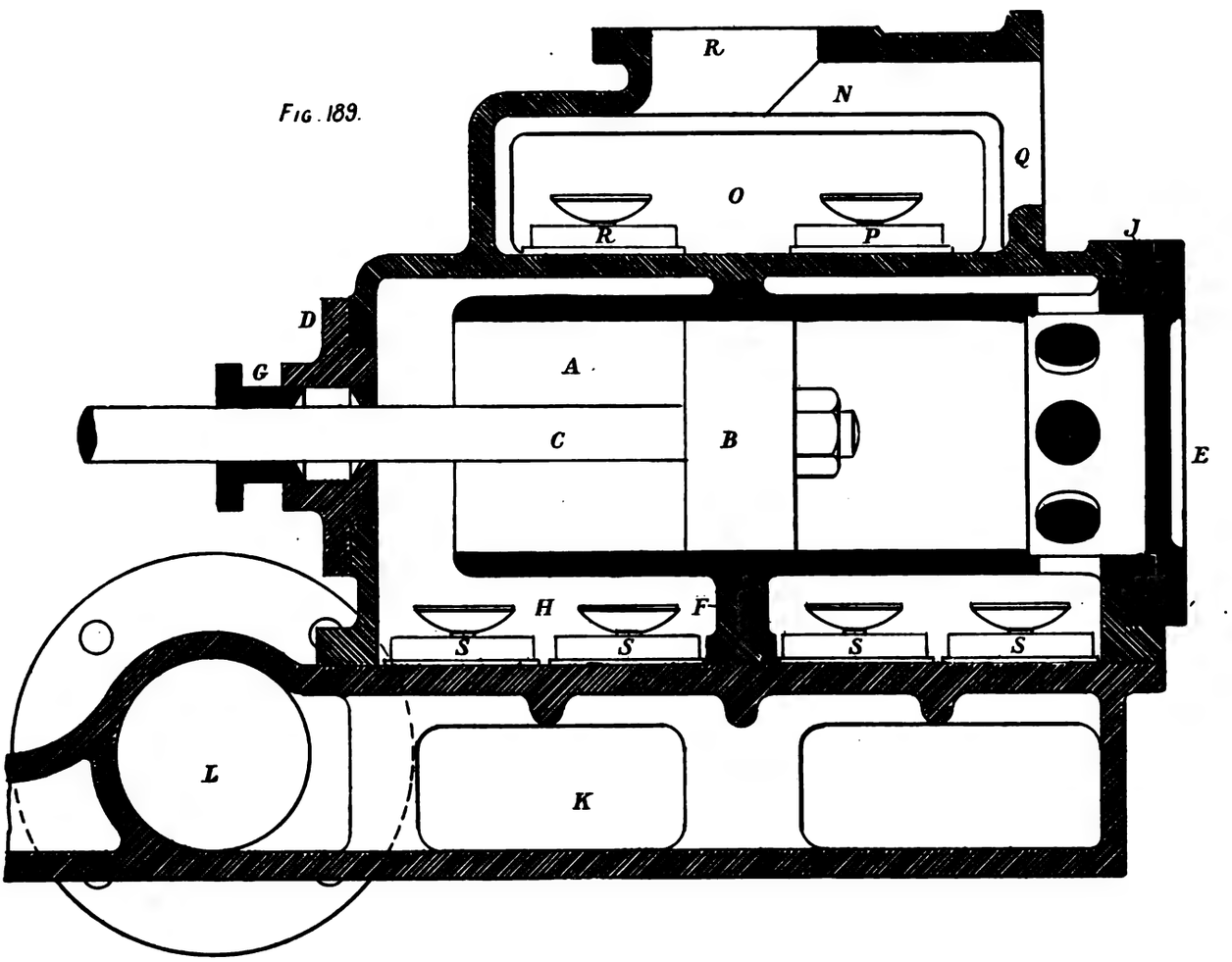

Fig. 190.

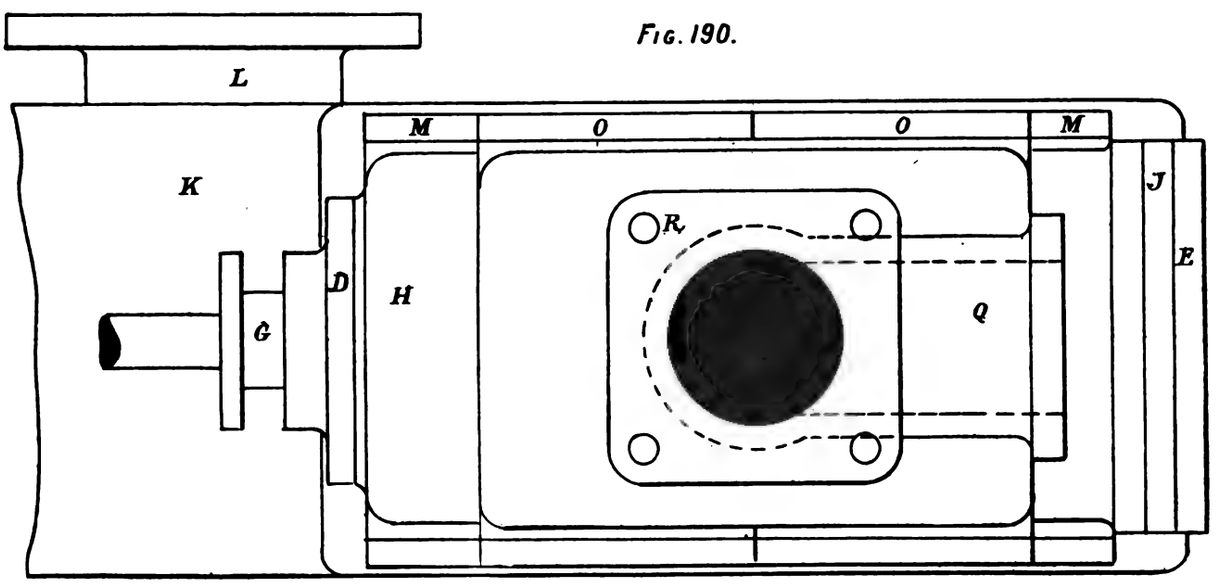

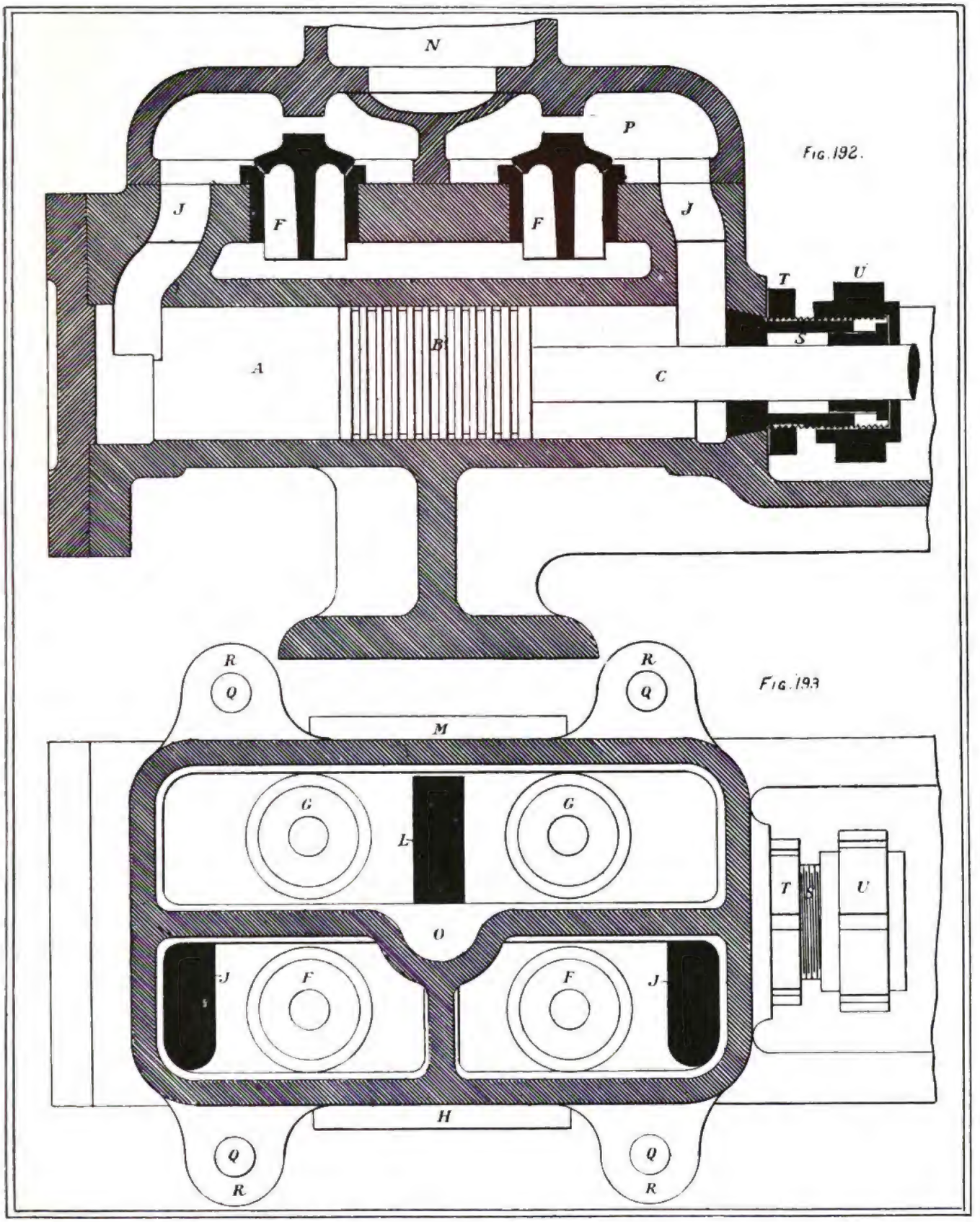

Fig. 192.

Fig. 193

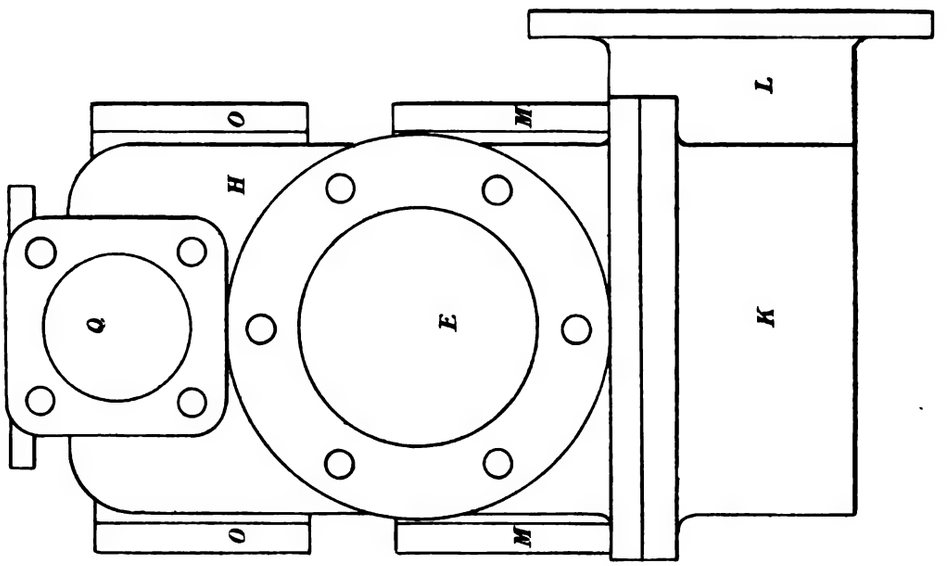

Fig. 191.

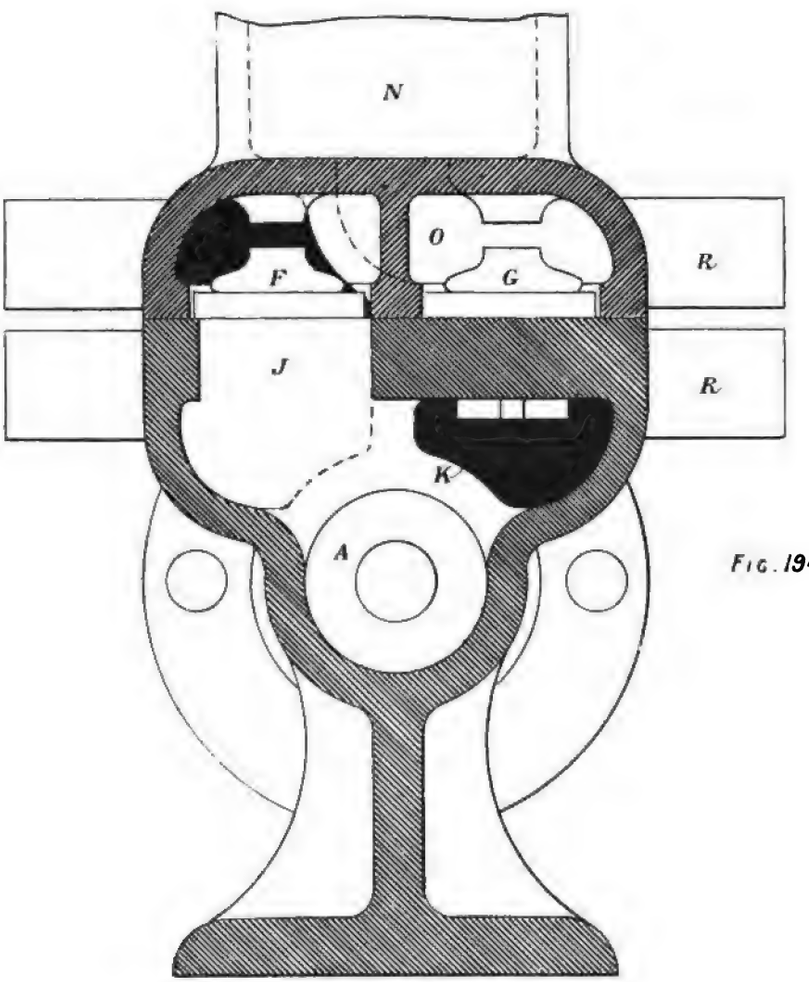

Fig. 194.

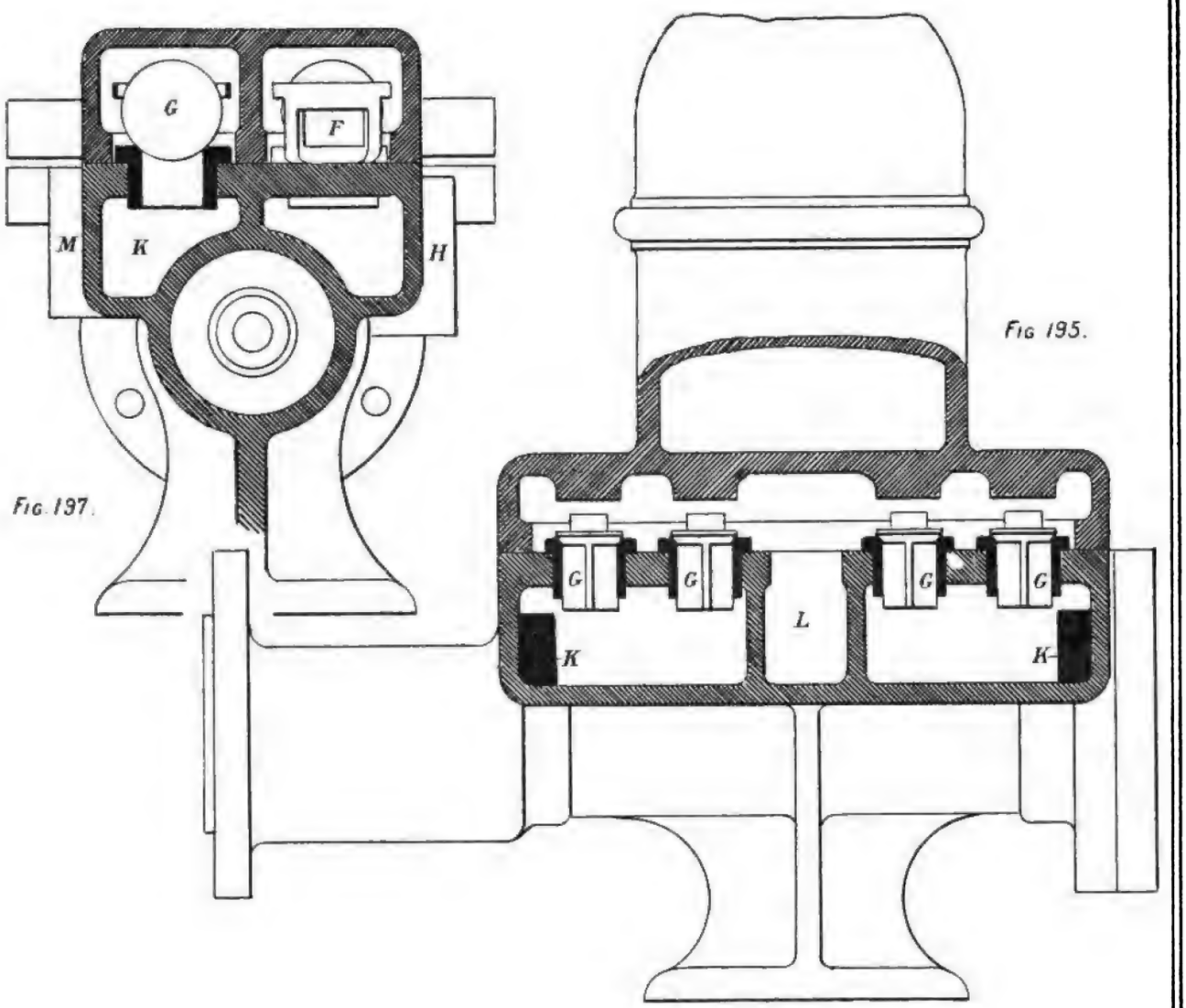

Fig. 197.

Fig 195.

Fig. 196.

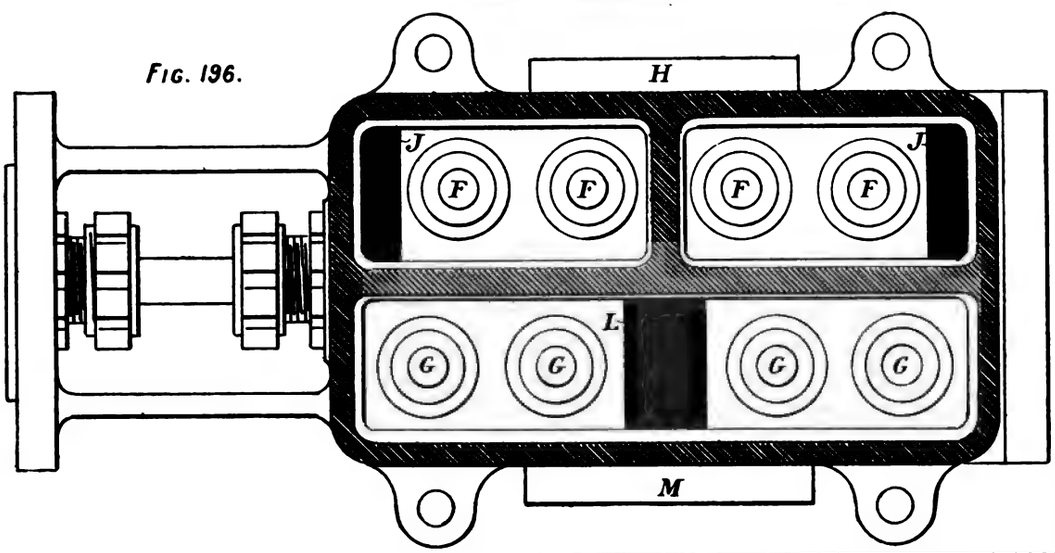

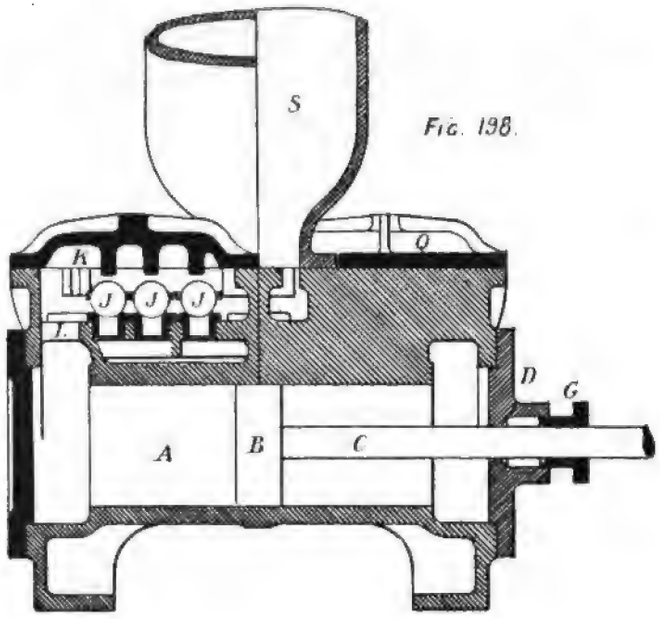

Fig. 198.

Fig. 200.

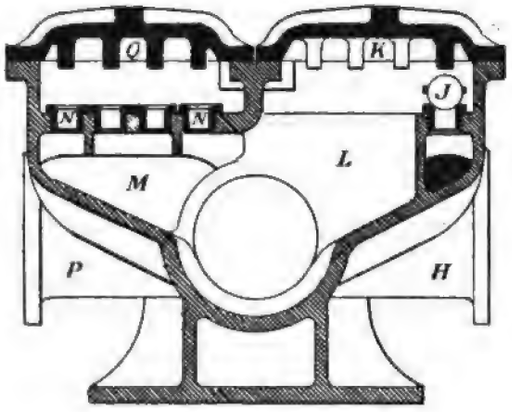

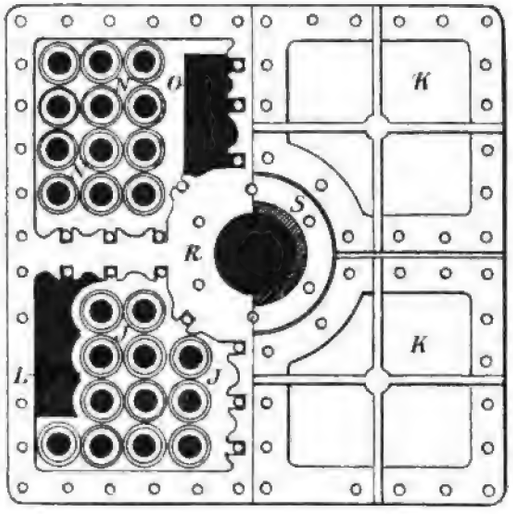

Fig. 199.

Plate LXIX

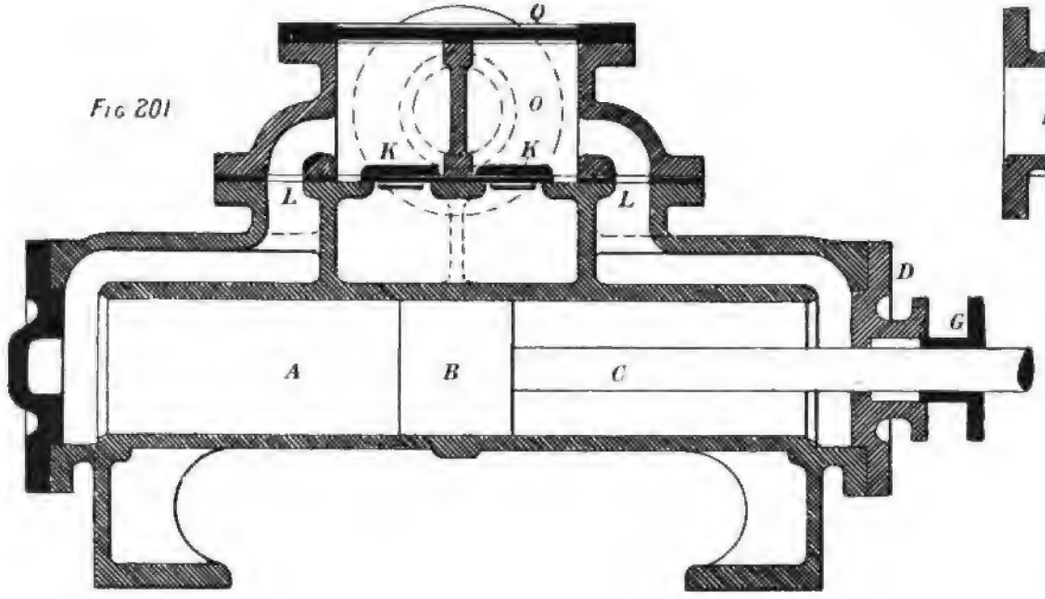

Fig 201

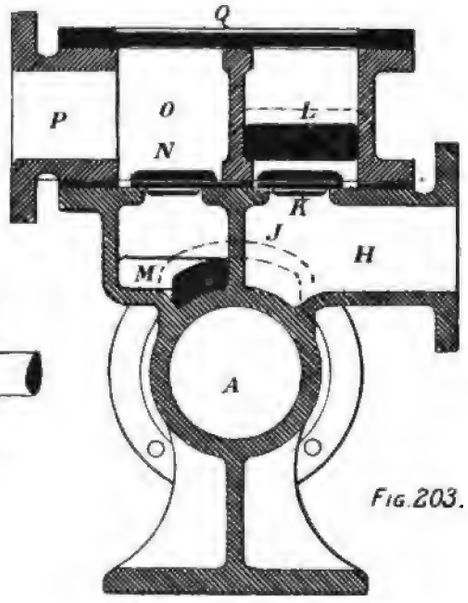

Fig. 203.

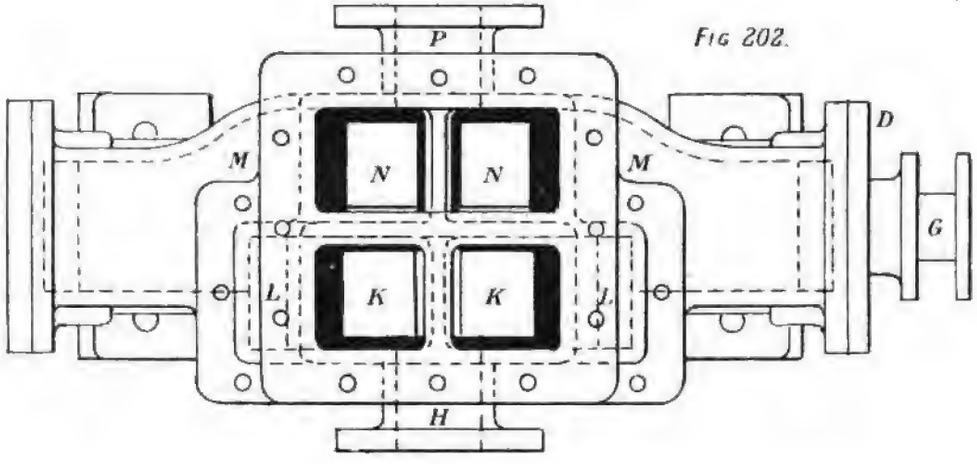

Fig 202.

Plate LXX.

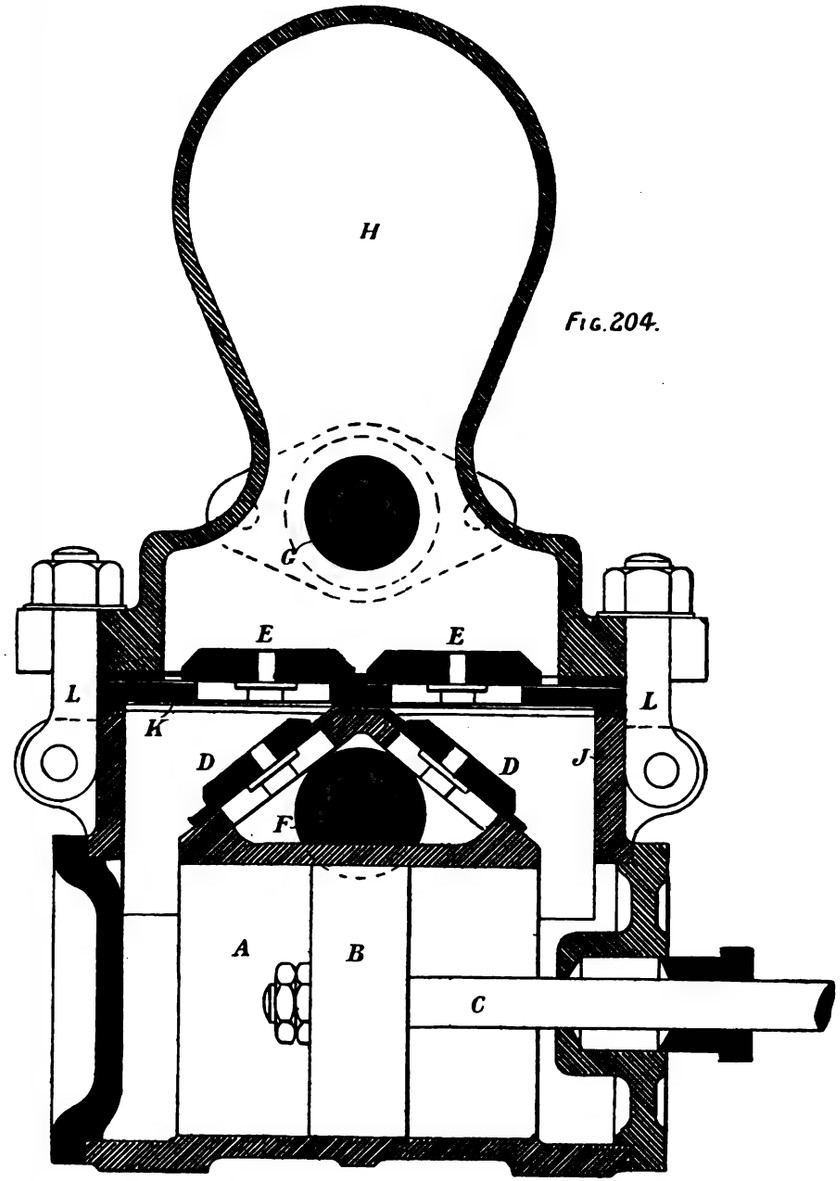

Fig. 204.

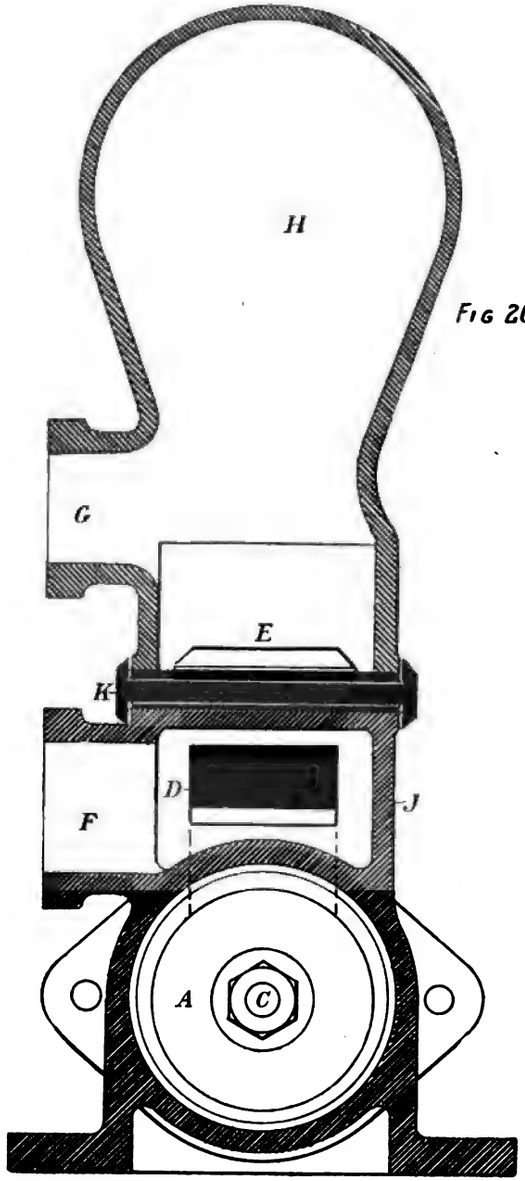

Fig 205.

Plate LXXI.

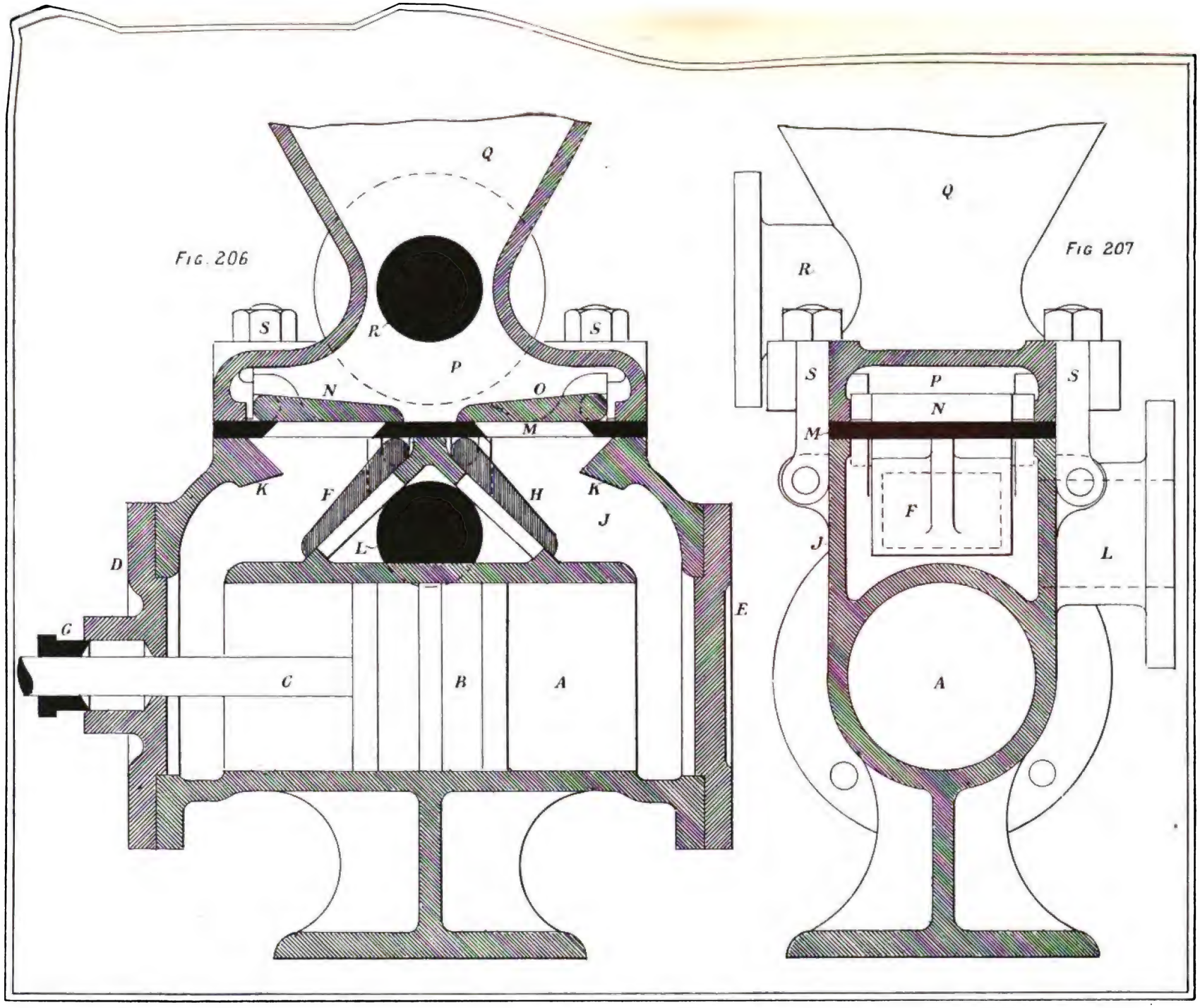

Plate LXXII

Fig. 208.

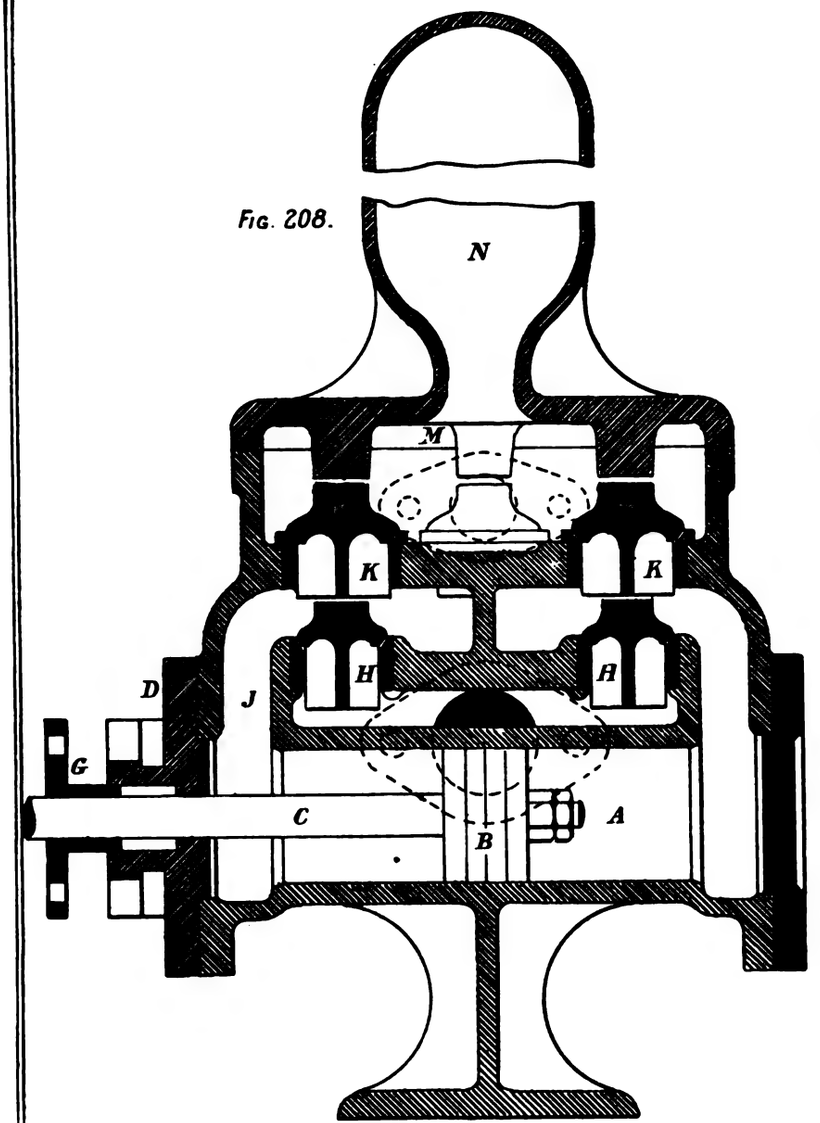

Fig. 210.

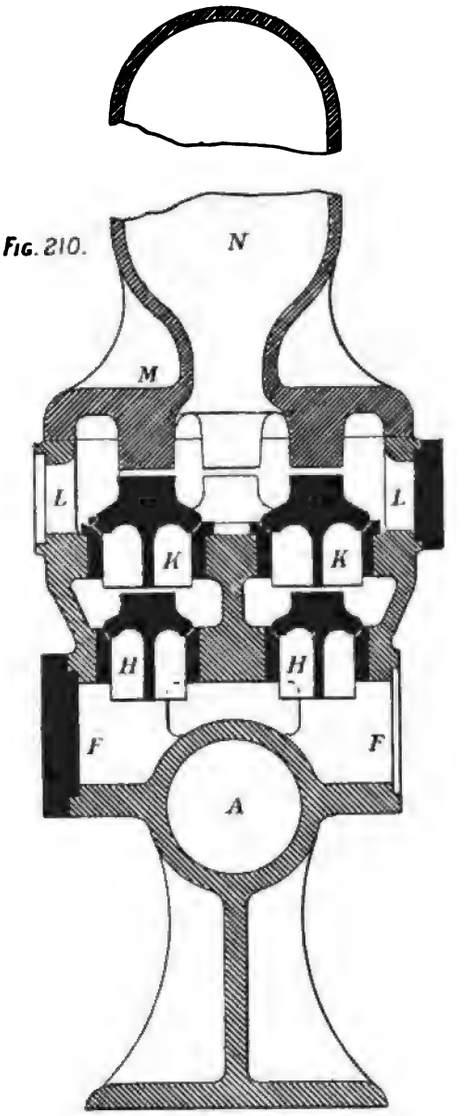

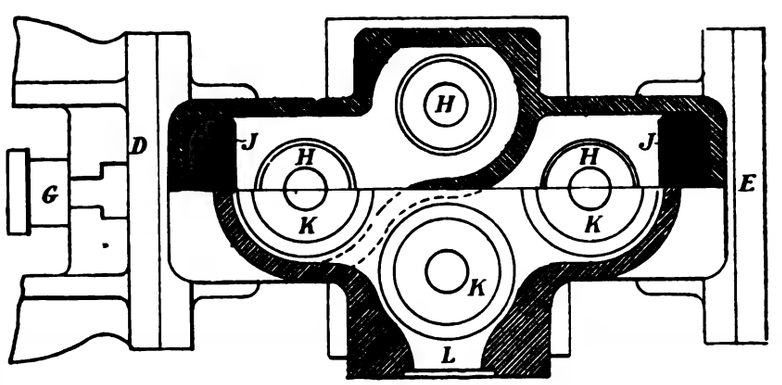

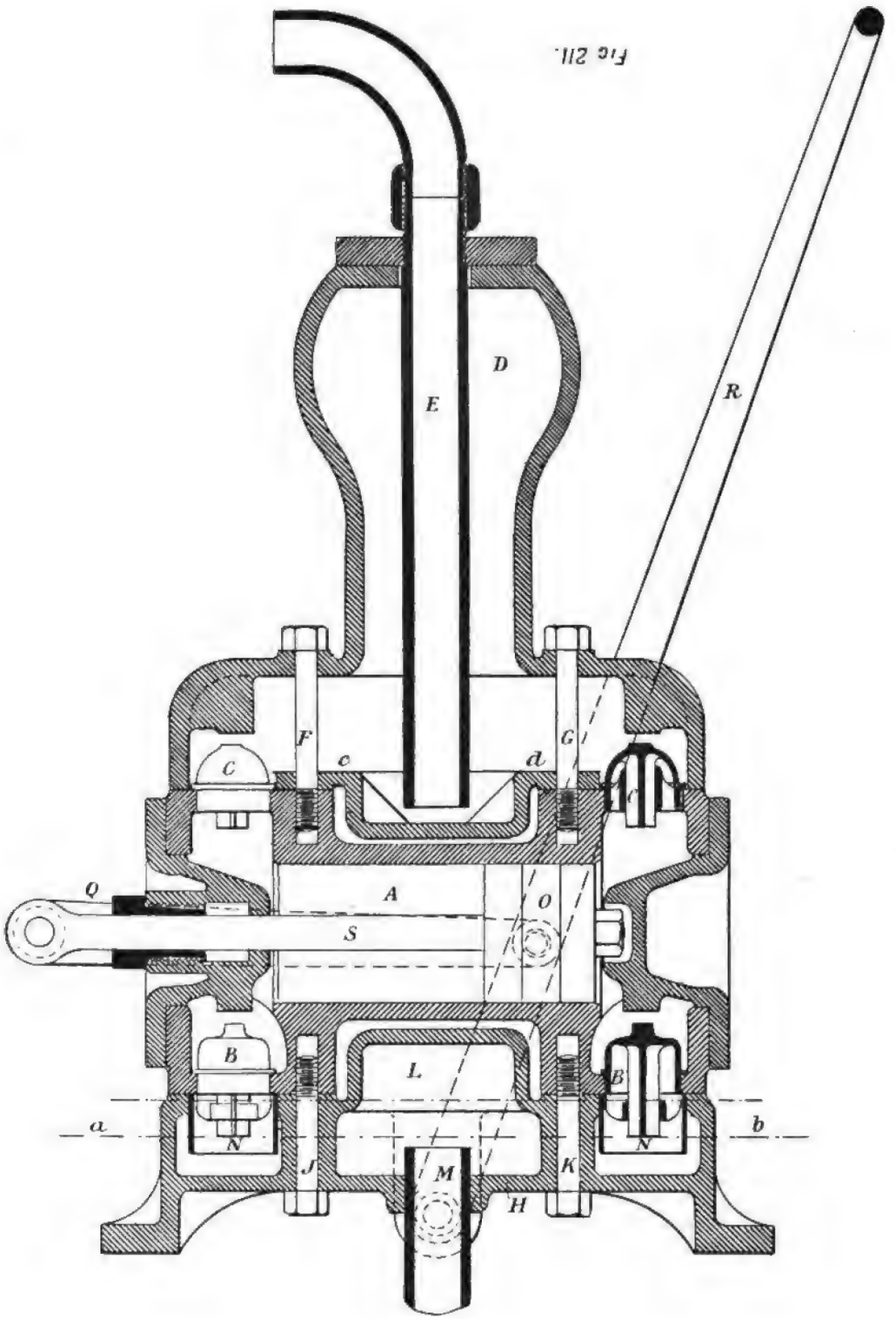
Fig 211.
E
D
R
F
G
C
c
d
Q
A
O
S
B
L
a
b
N
J
M
K
H

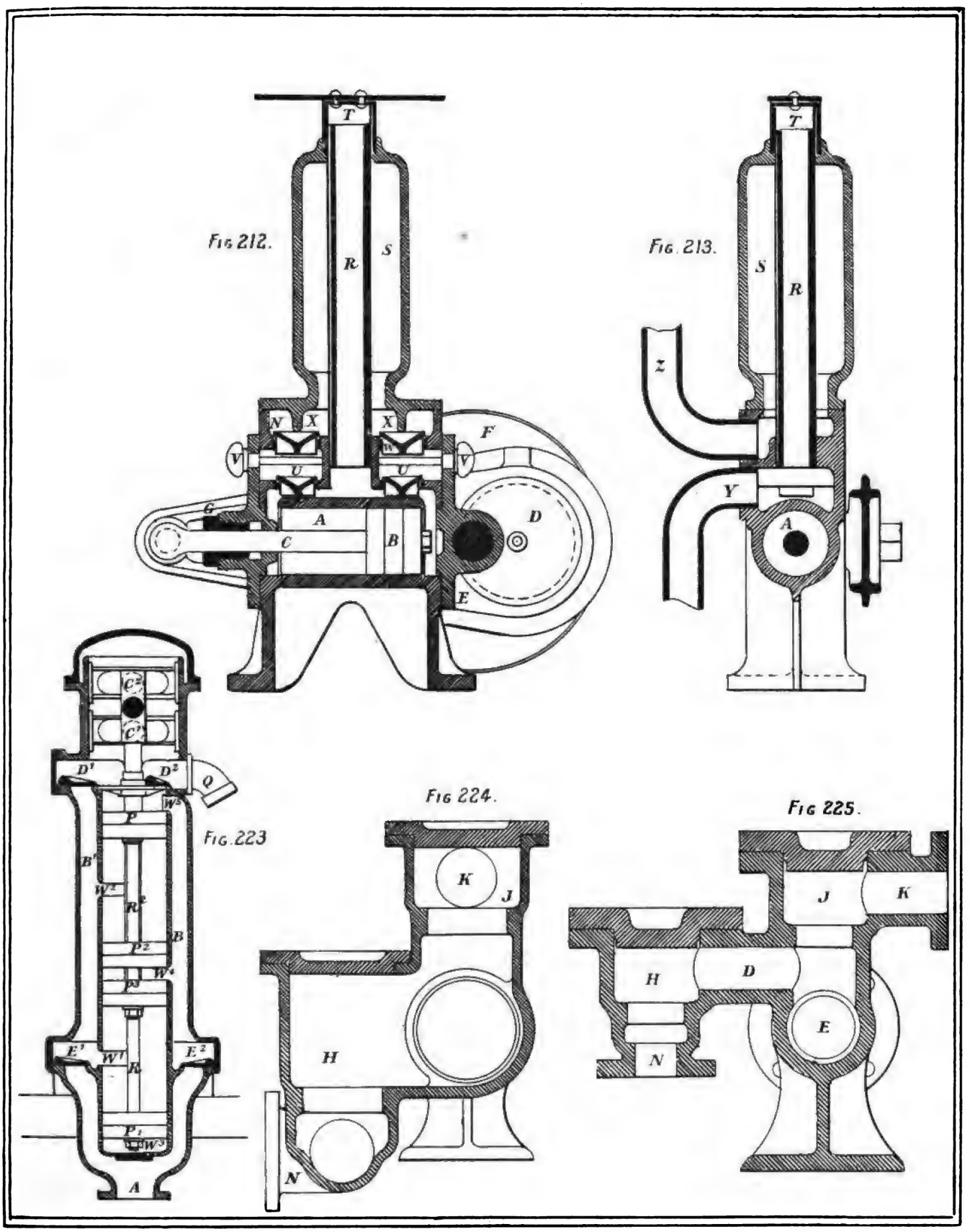
Fig 212.
T
R
S
N
X
X
F
V
V
U
U
G
A
C
B
D
E
Fig. 213.
T
S
R
z
Y
A
Fig. 223
C²
C¹
D¹
D²
Q
W⁵
P
B¹
W²
R²
B
P²
W⁴
P³
E¹
W¹
R₁
E²
P₁
W³
A
Fig 224.
K
J
H
N
Fig 225.
J
K
H
D
E
N

Fig 214.

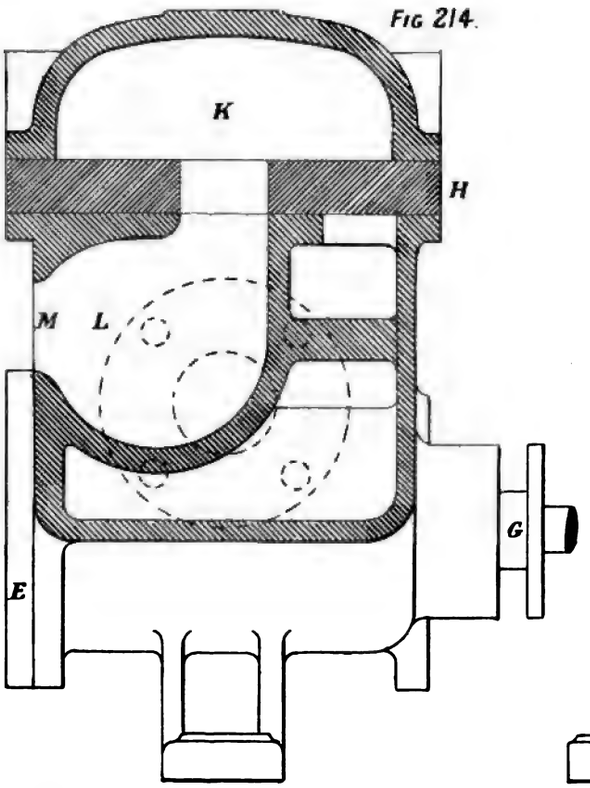

Fig 216.

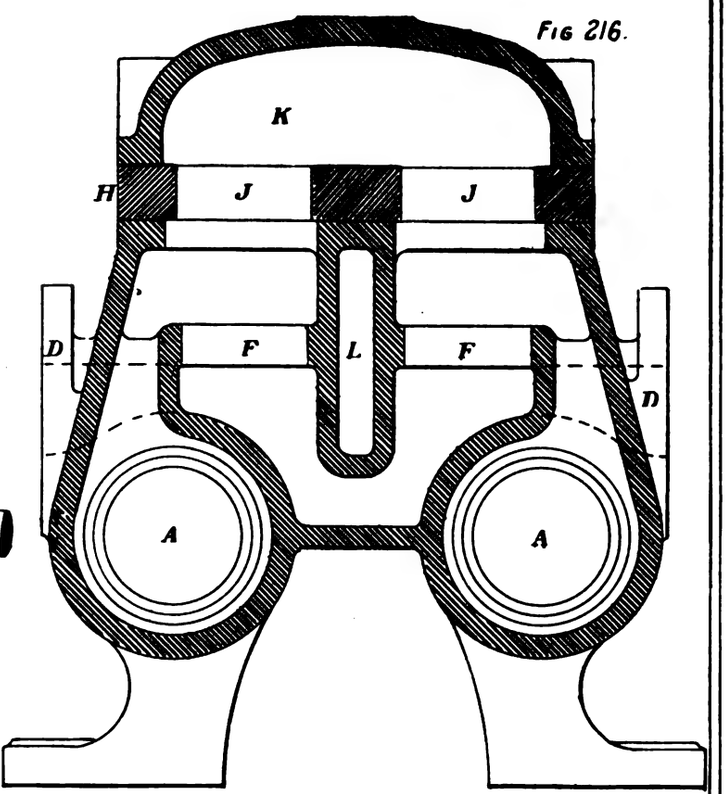

Fig 215

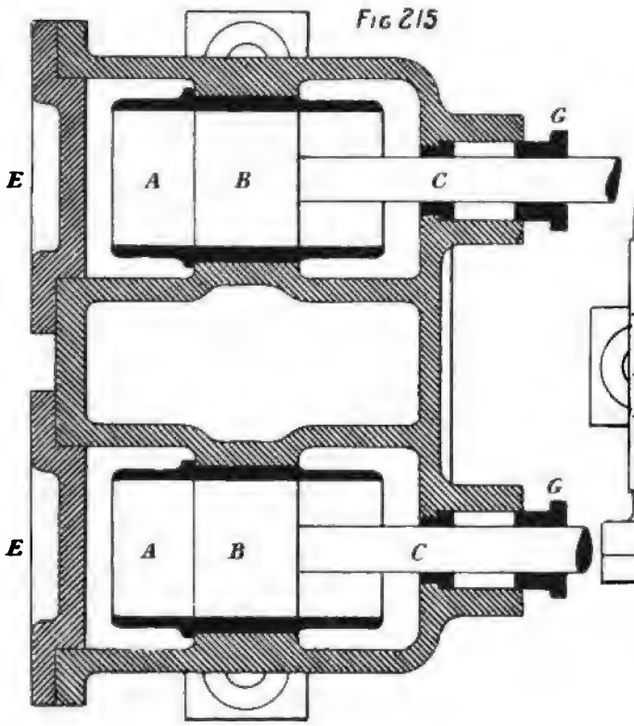

Fig 217

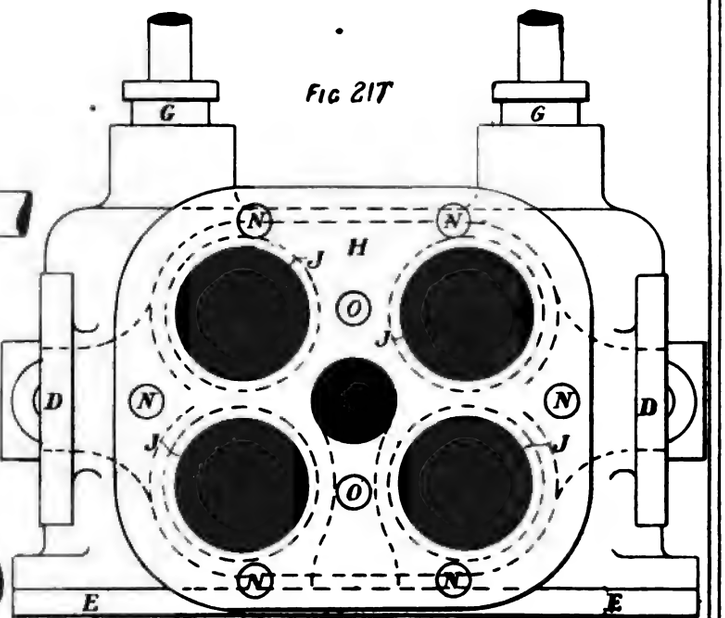

Fig. 218.

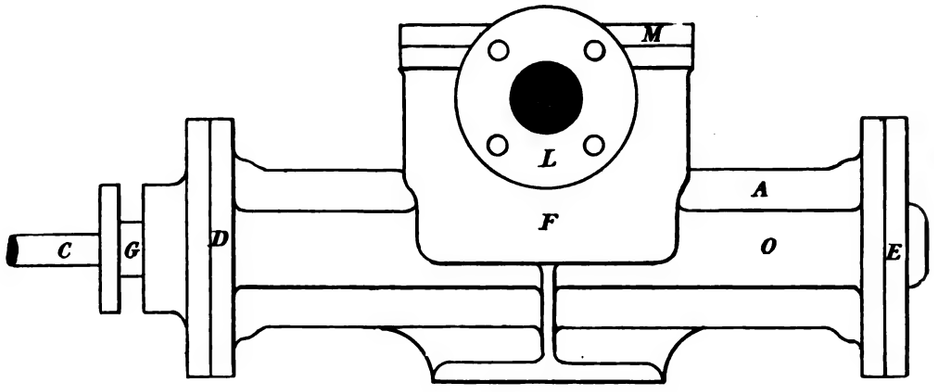

Fig 220.

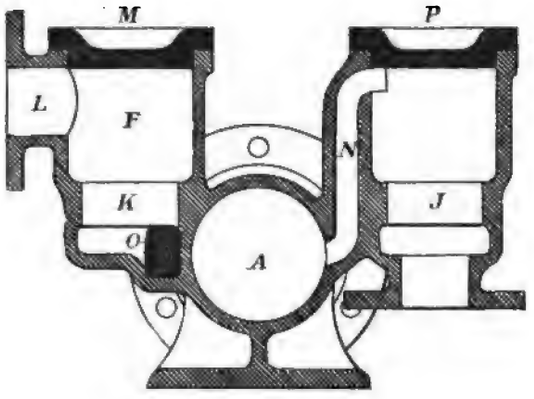

Fig 219.

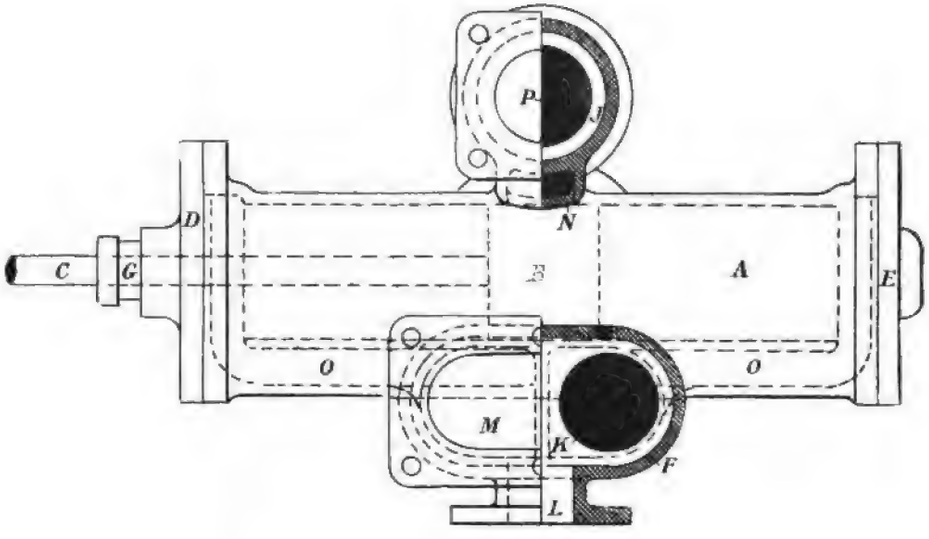

Plate LXXVII.

Fig. 221

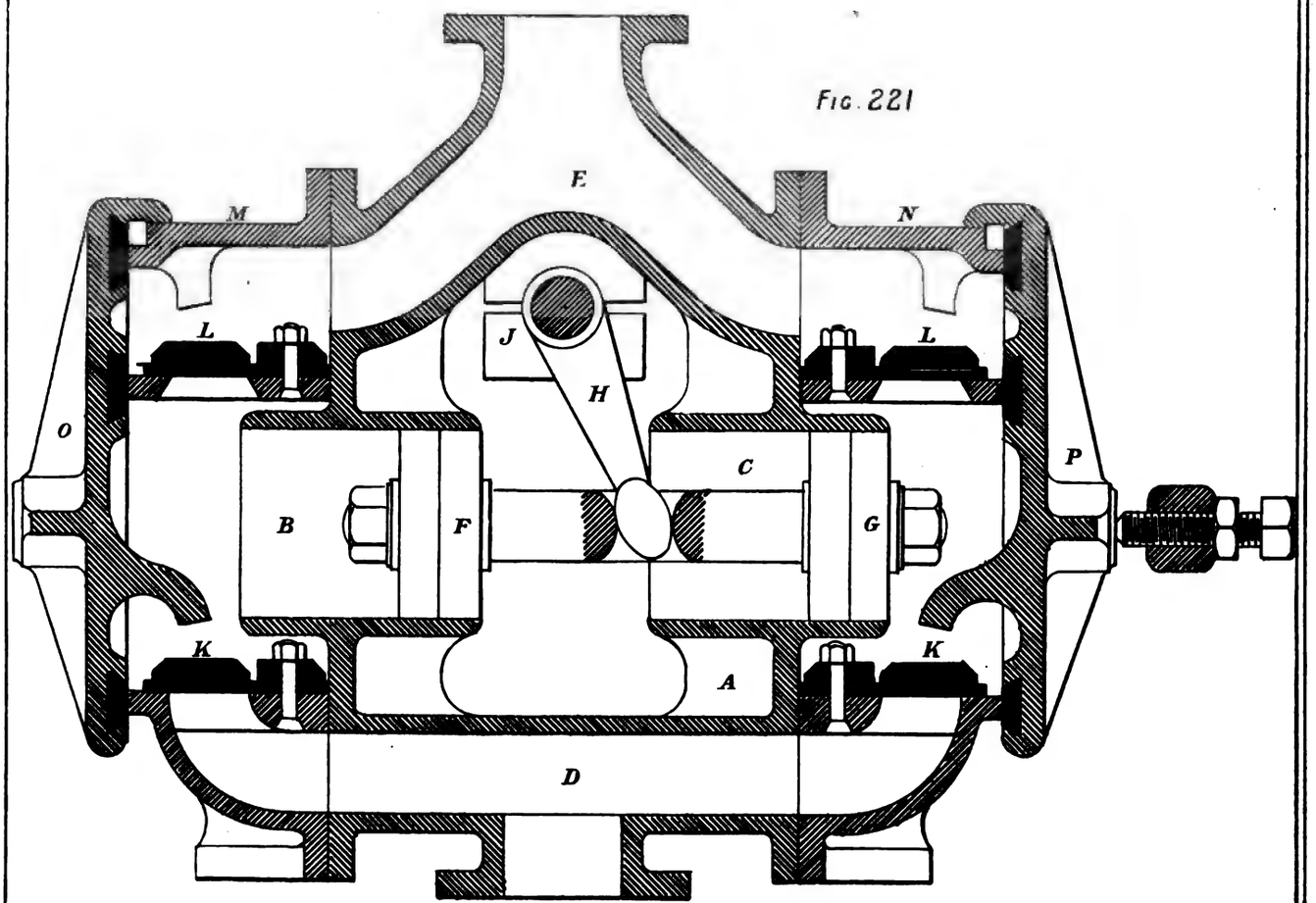

Fig. 222.

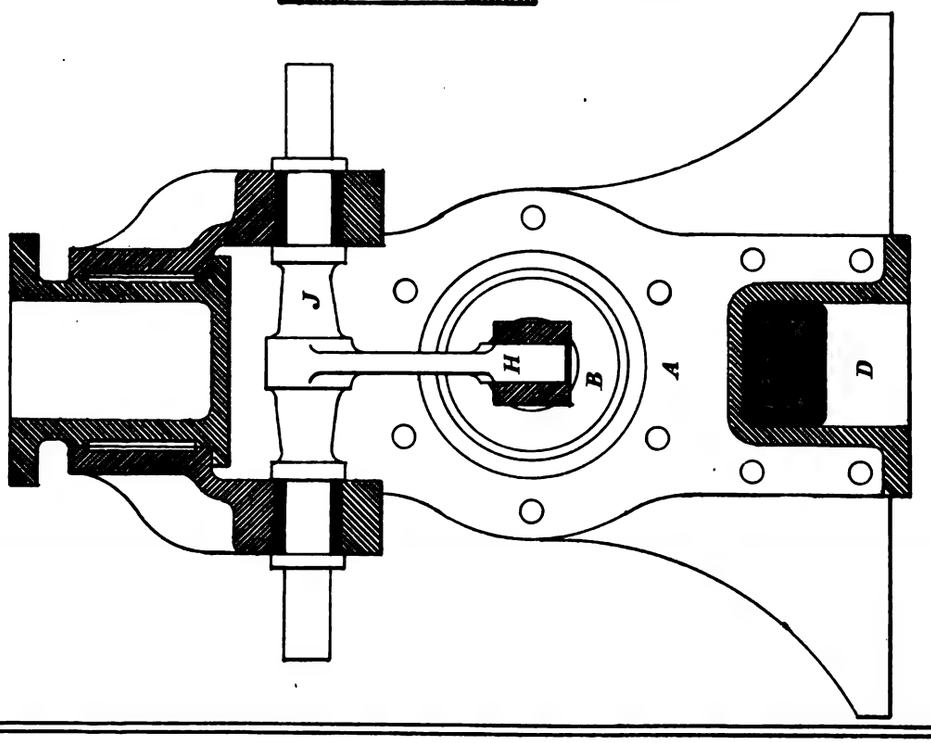

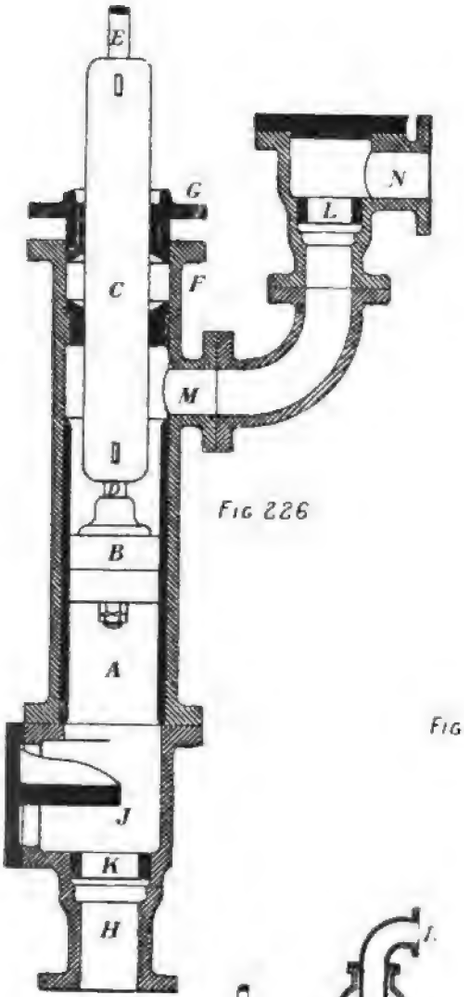

Fig 226

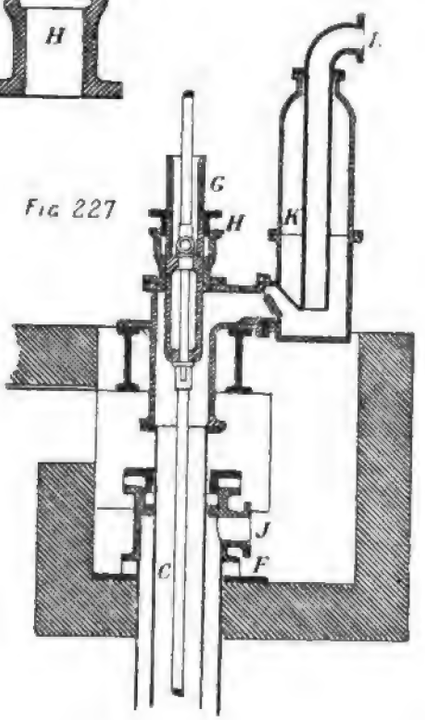

Fig 227

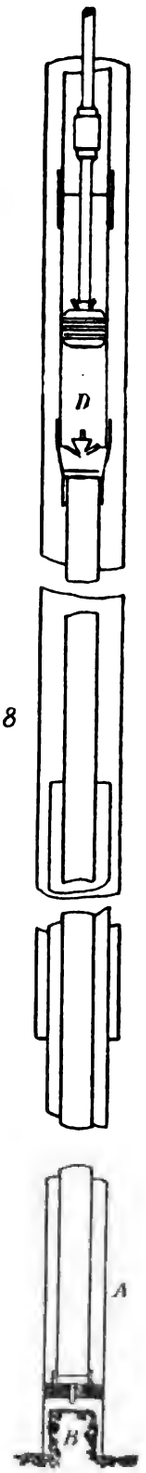

Fig 228

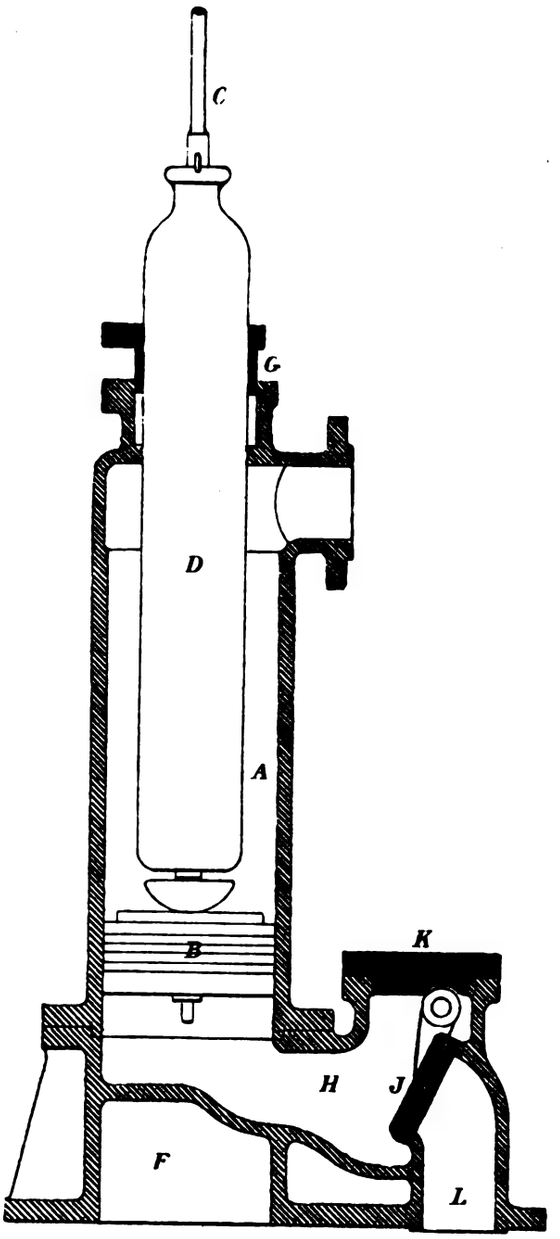

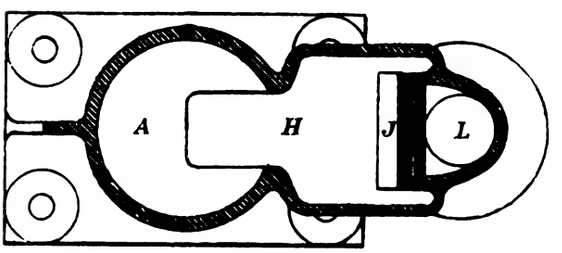

Fig. 231.

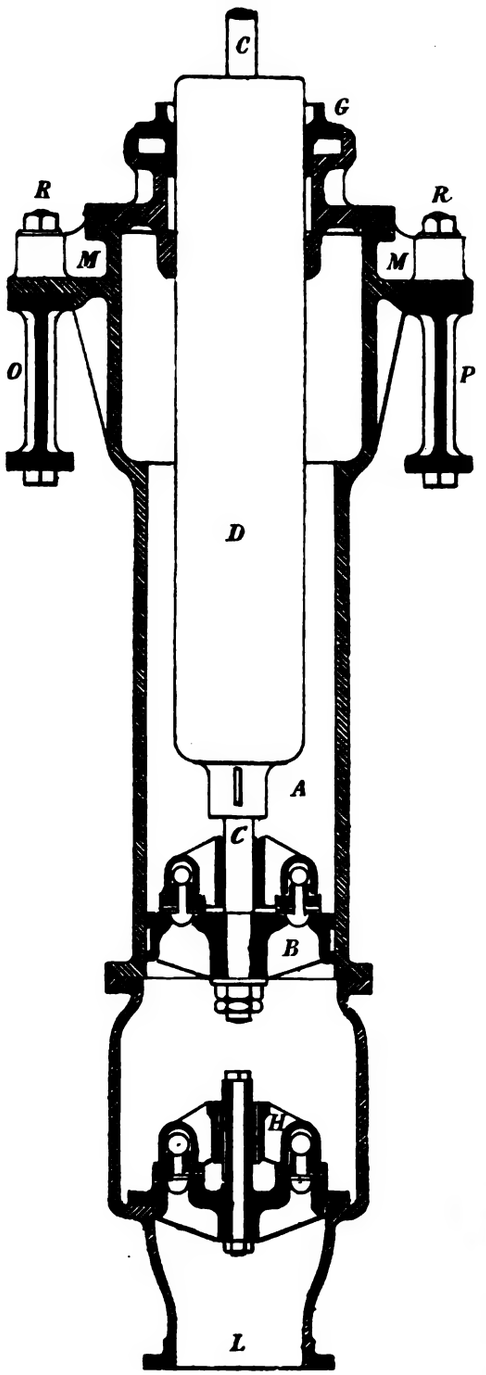

Fig 232

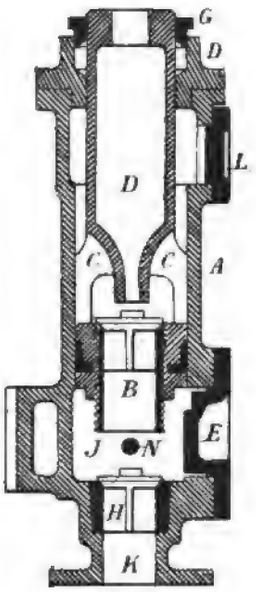

Fig 233

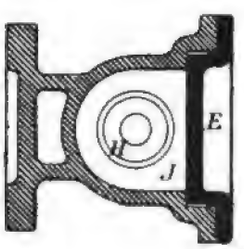

Fig 235

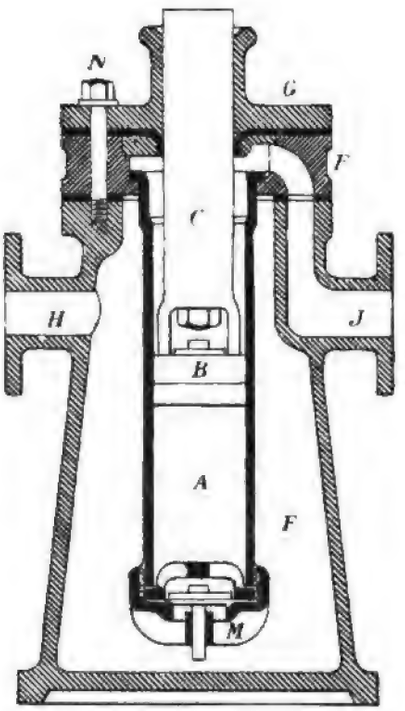

Fig. 234.

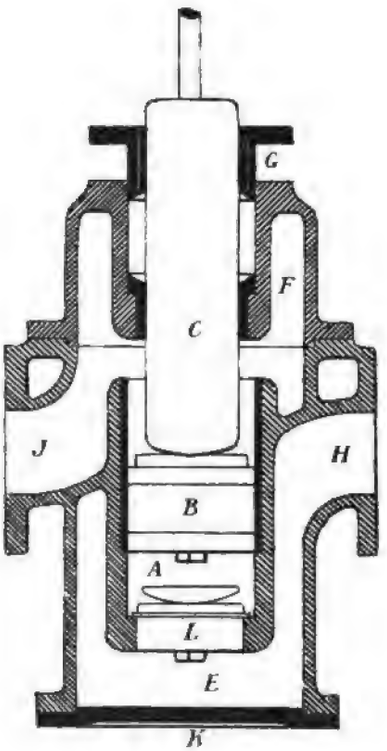

Fig. 236.

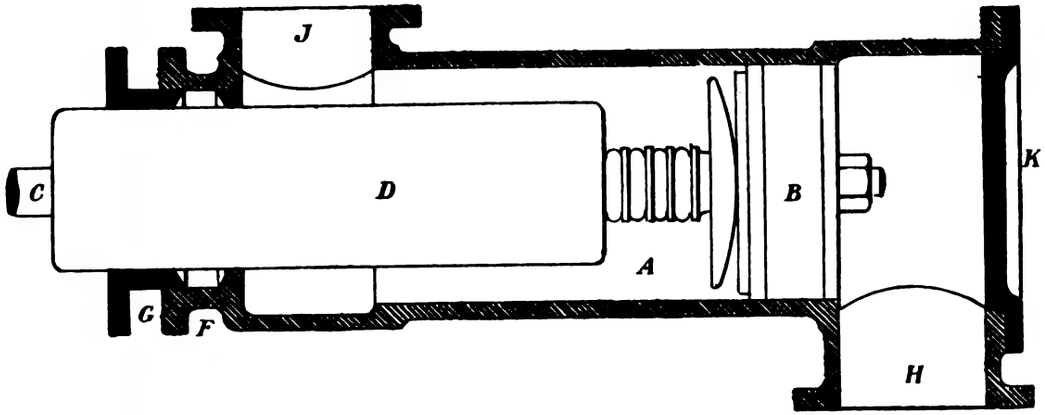

Fig. 238

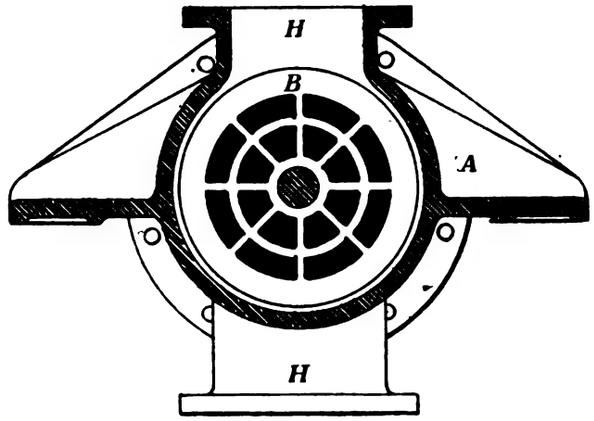

Fig 237.

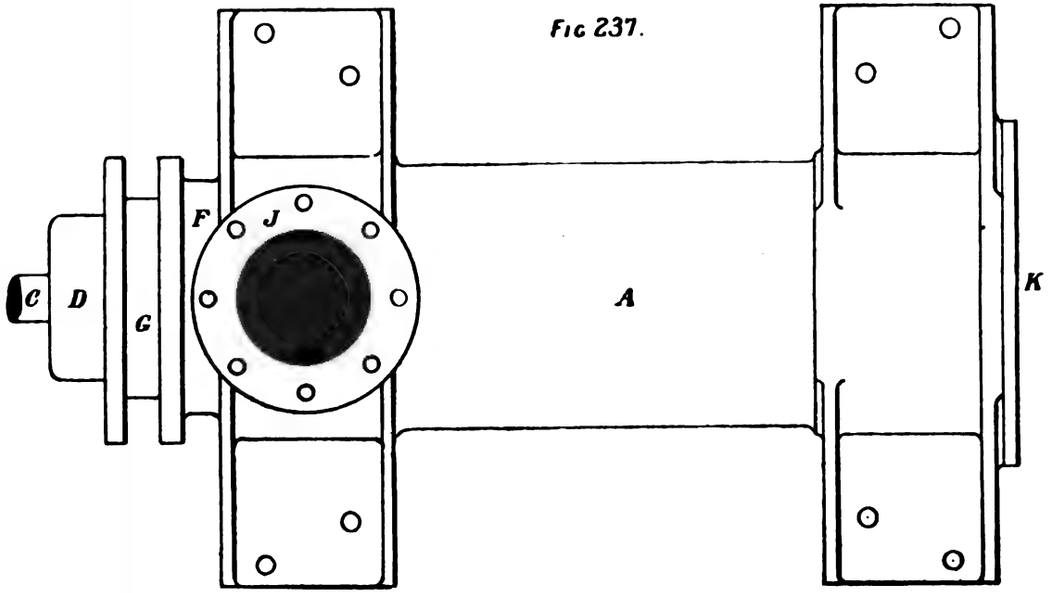

Fig. 239

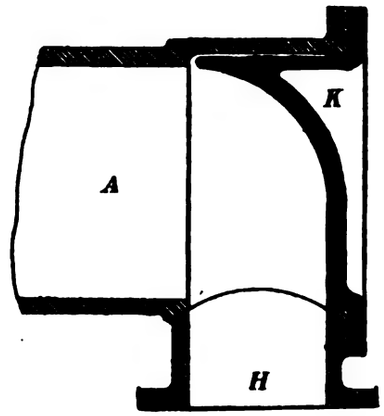

Plate LXXXI.

Fig 240

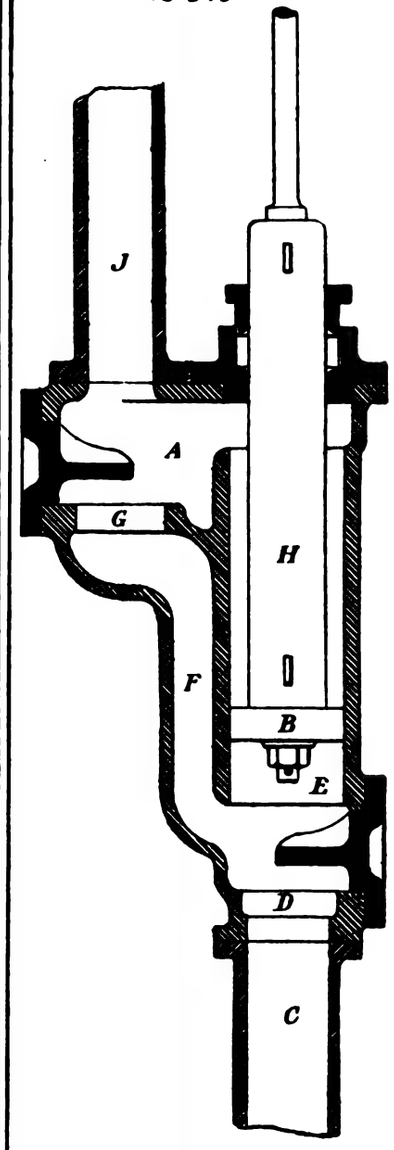

Fig 241.

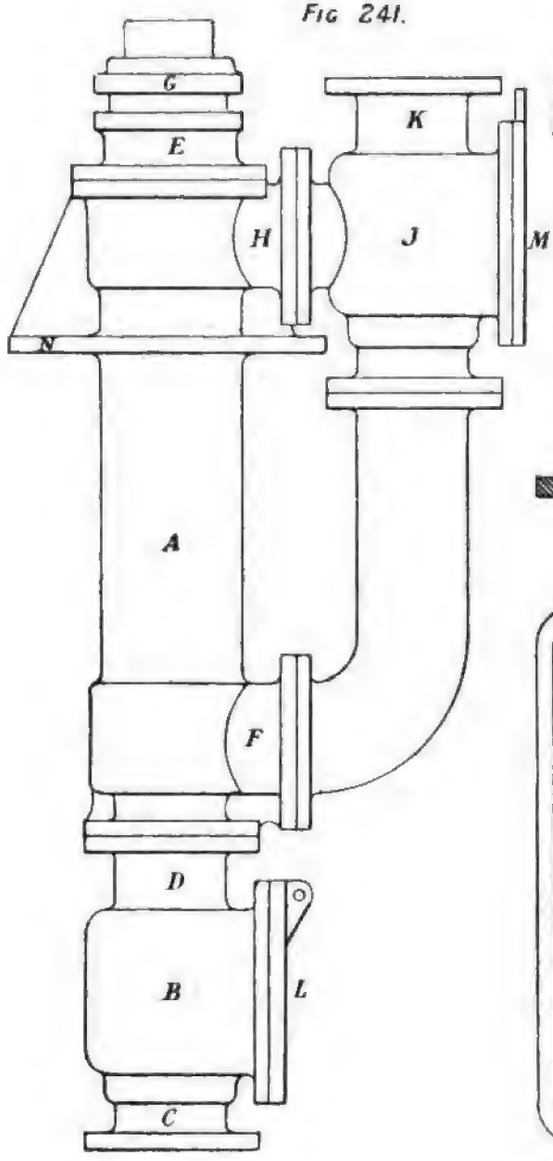

Fig 242

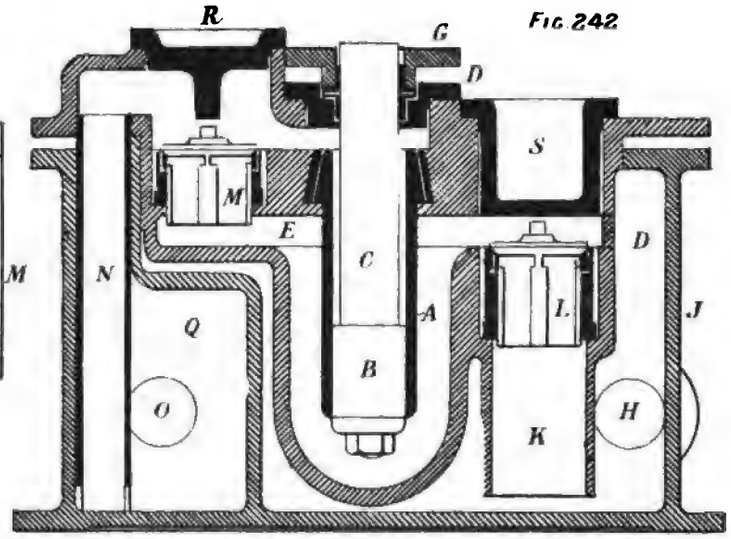

Fig 243.

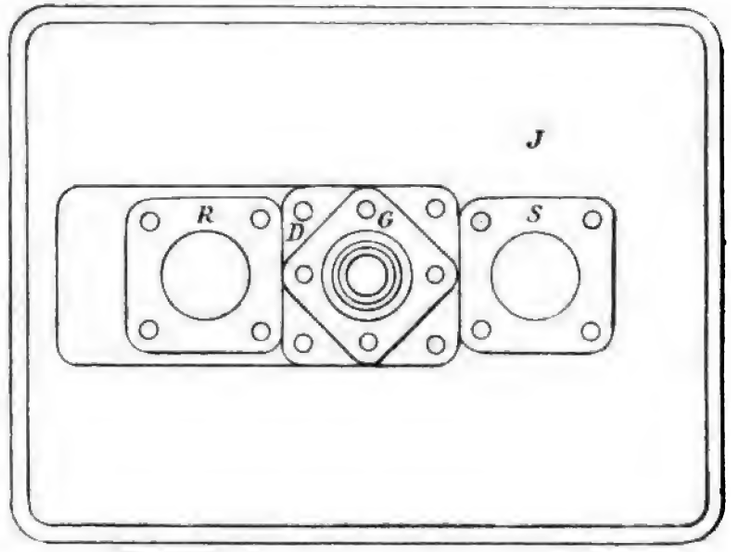

Plate LXXXII

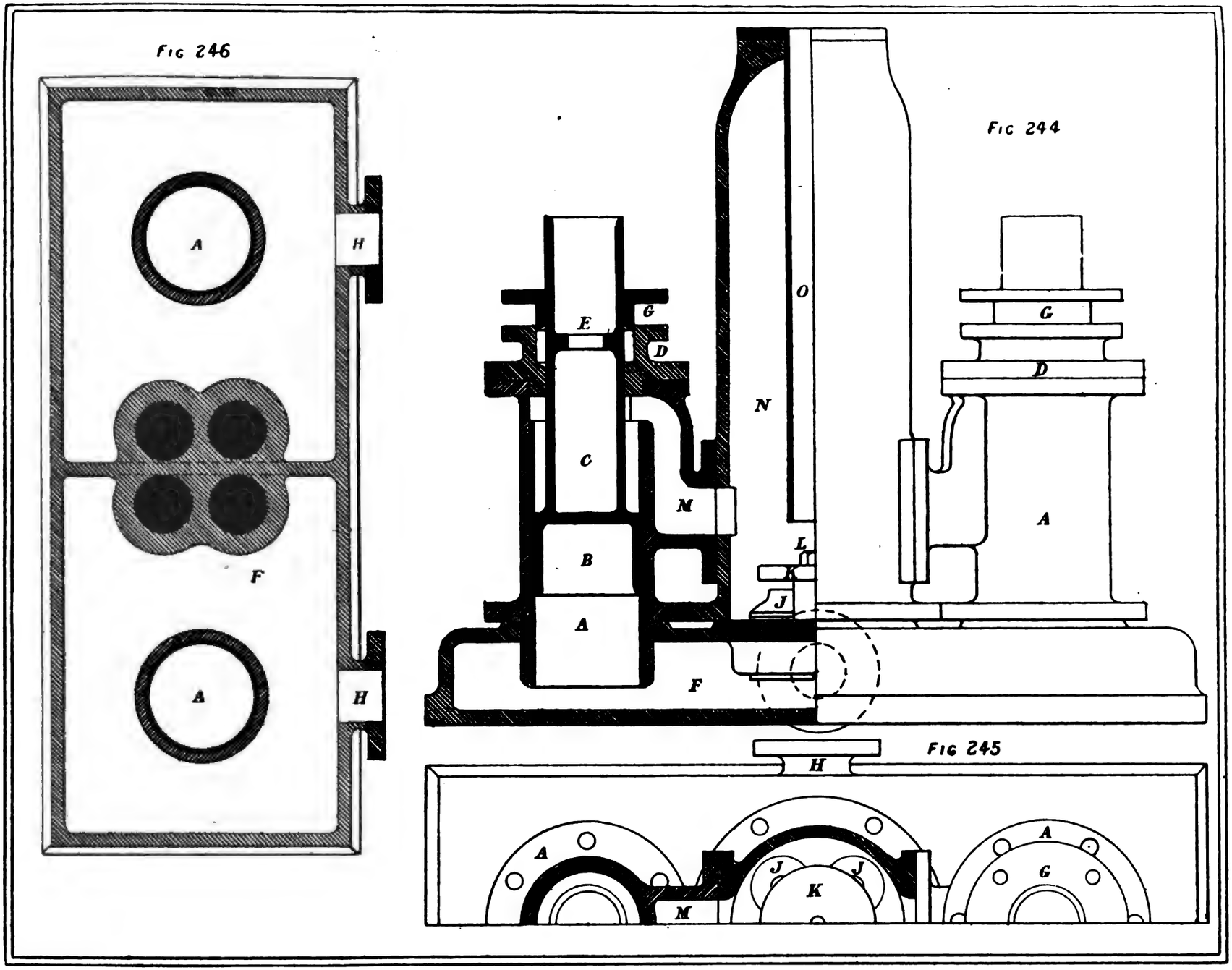

Plate LXXXIII.

Fig. 247

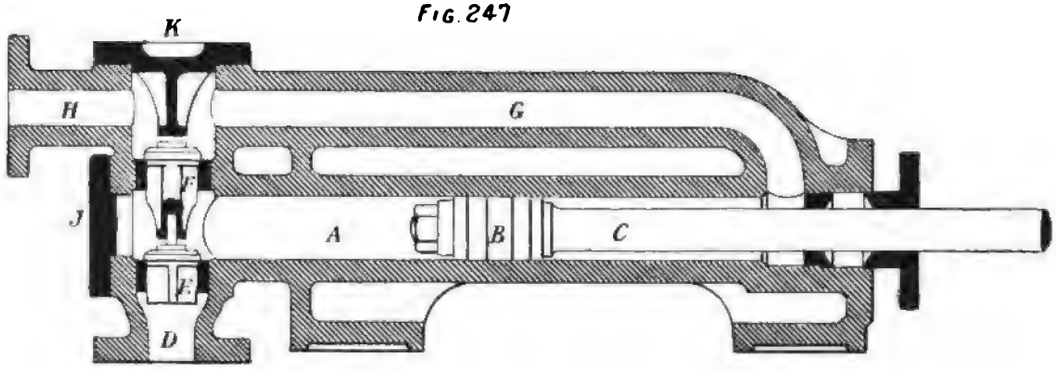

Fig. 249

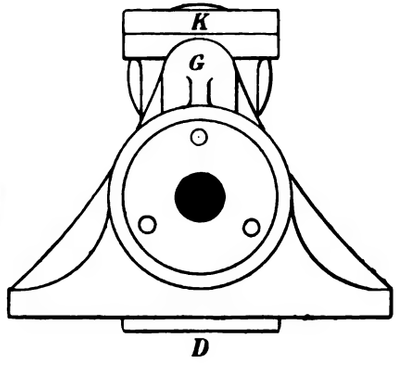

Fig. 248.

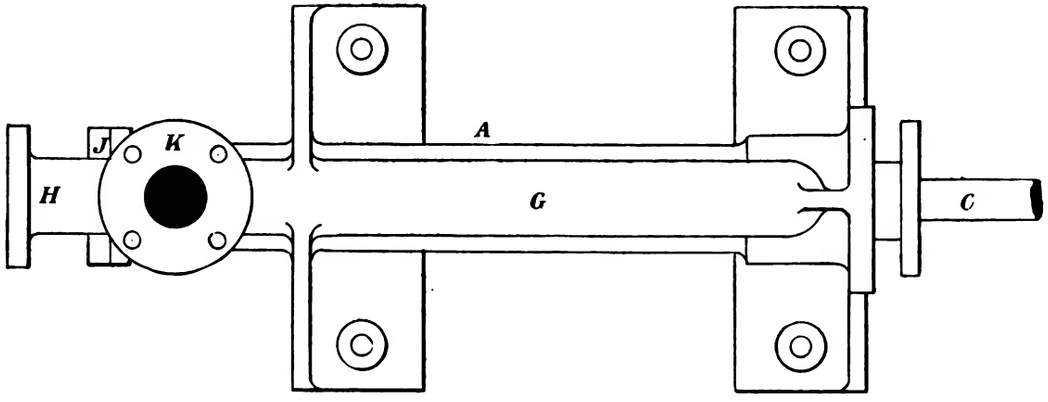

Plate. LXXXIV.

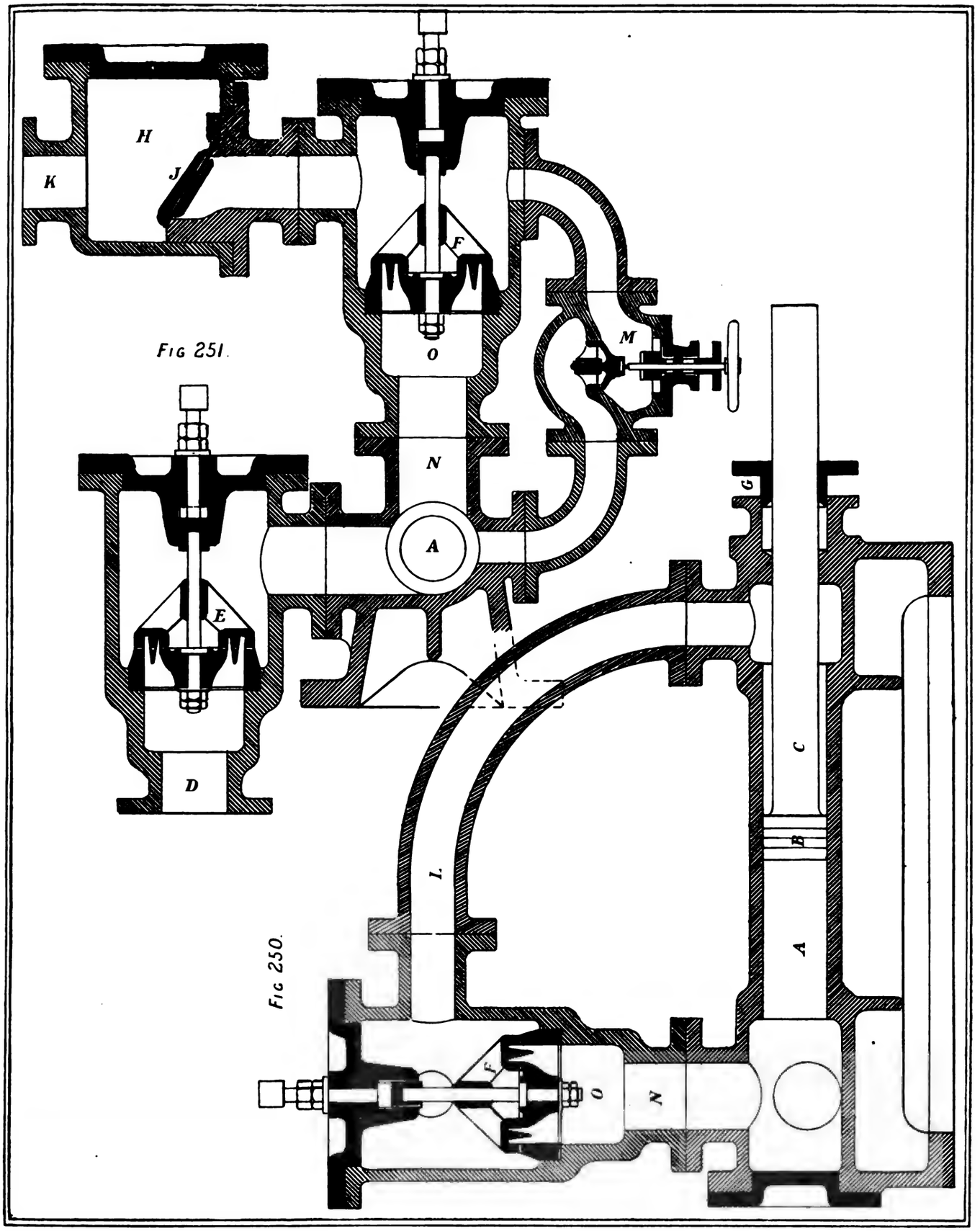

Fig 251.

Fig 250.

Fig 252

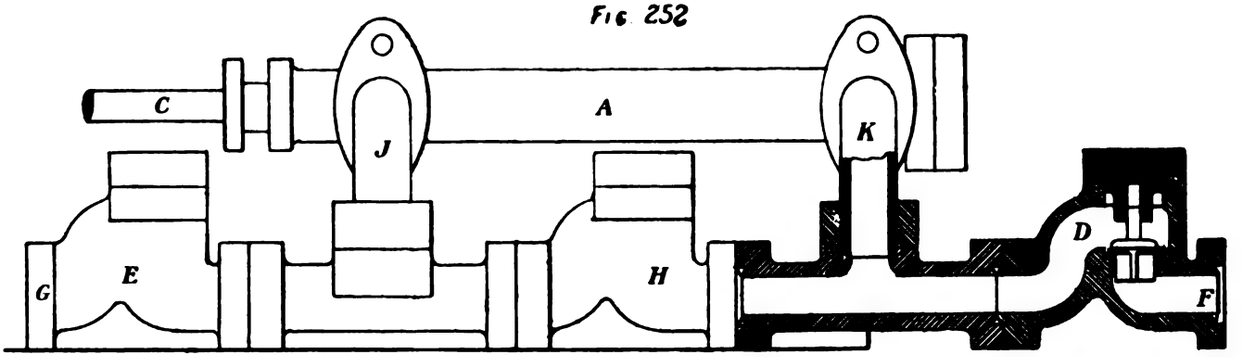

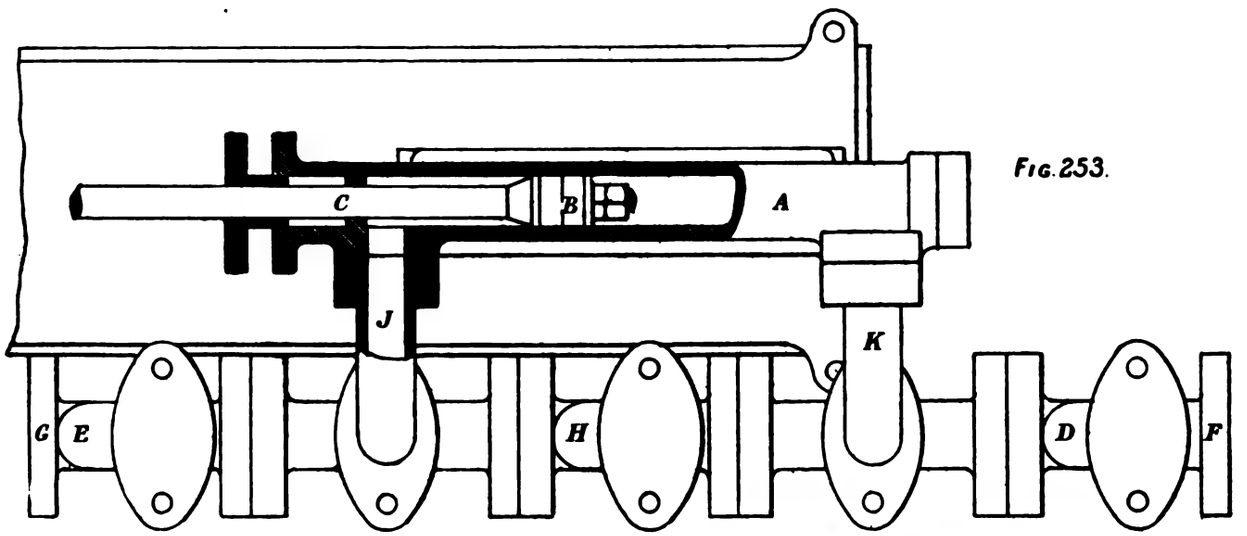

Fig.253.

Fig 254

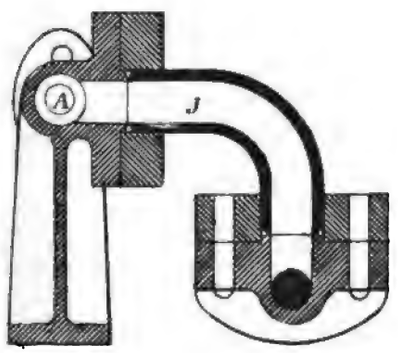

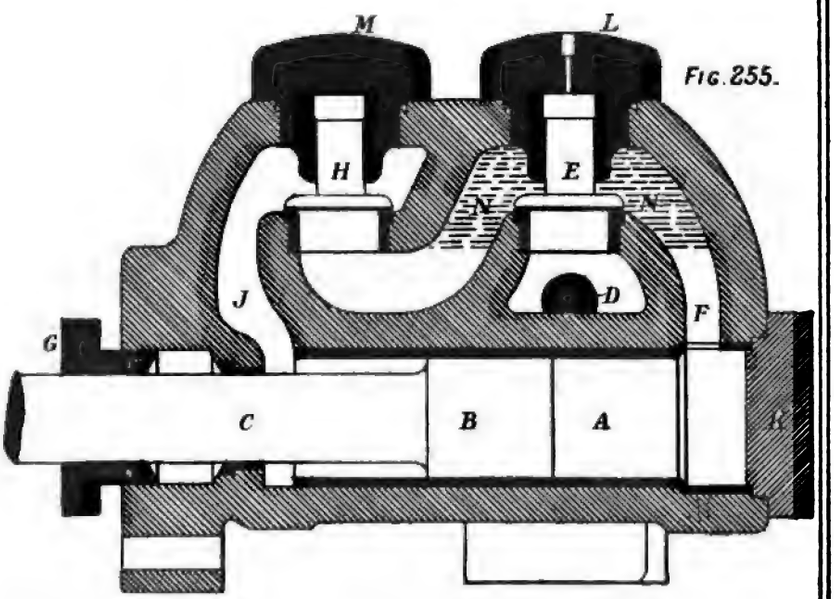

Fig.255.

Fig 258.

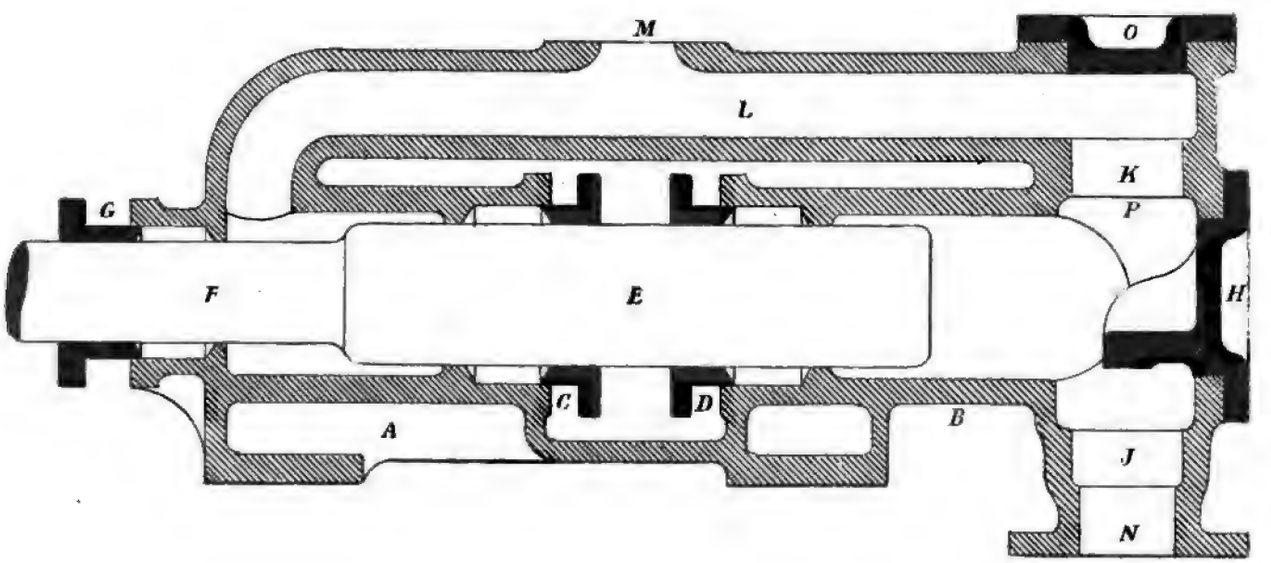

Fig. 259.

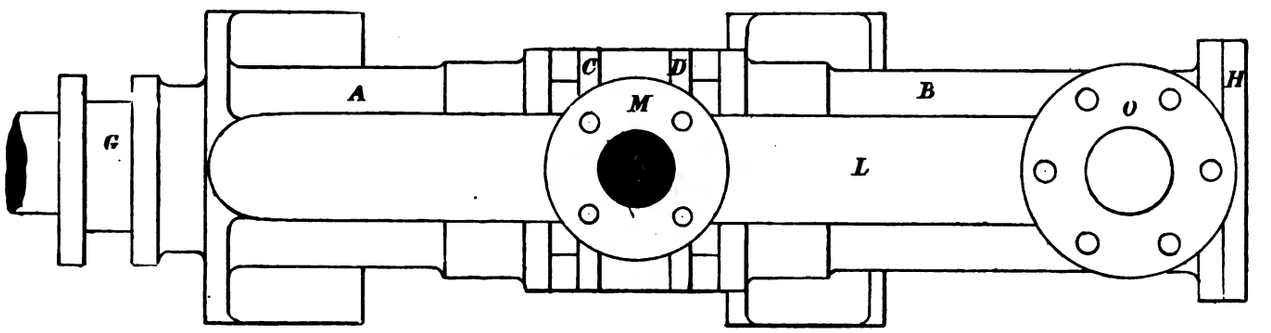

Fig. 263.

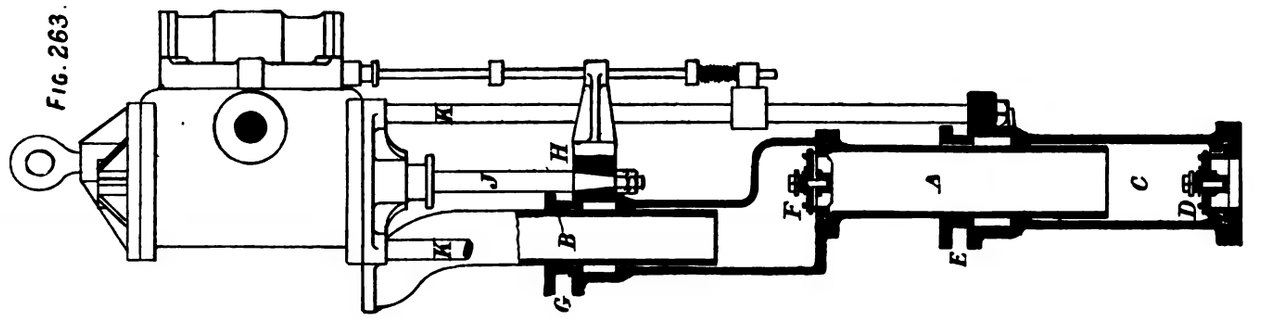

Fig. 267.

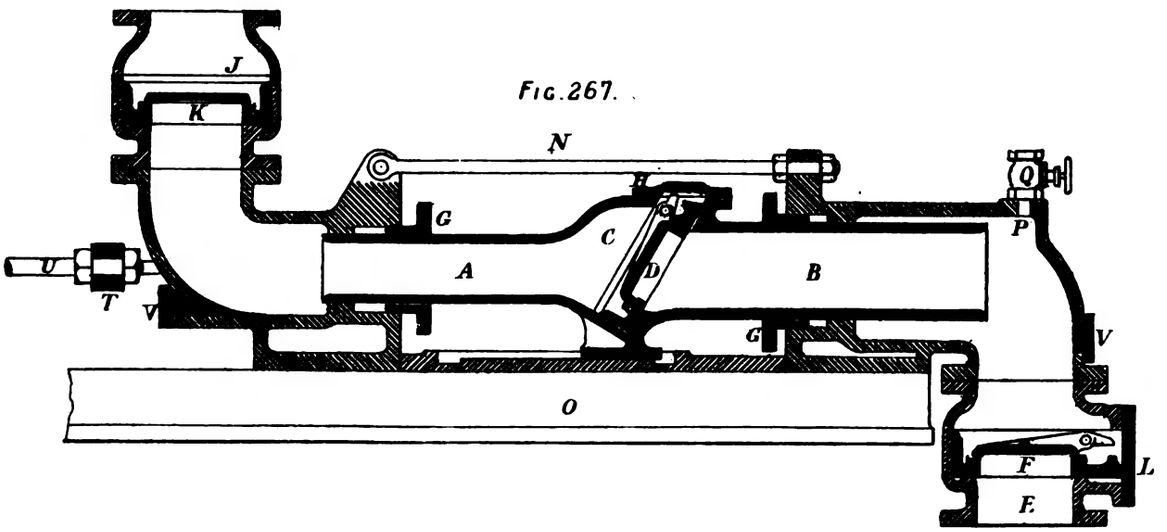

Fig 268.

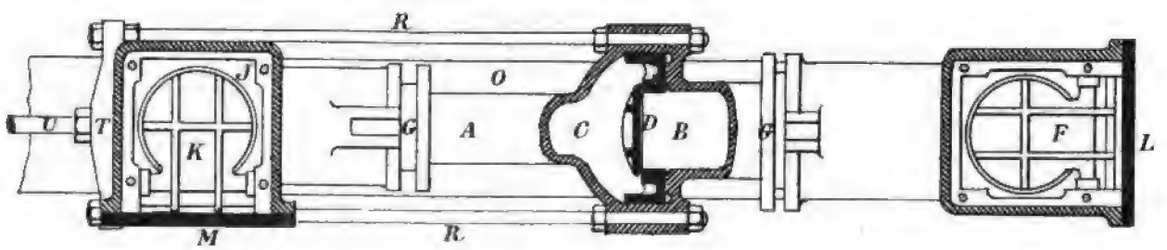

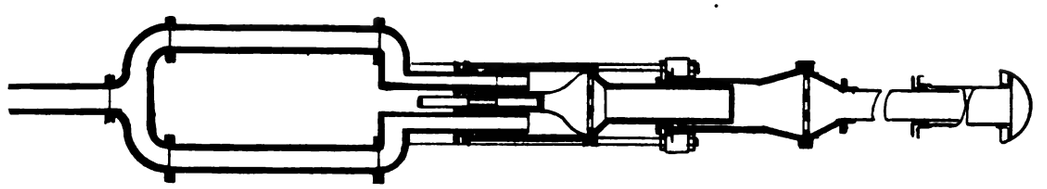

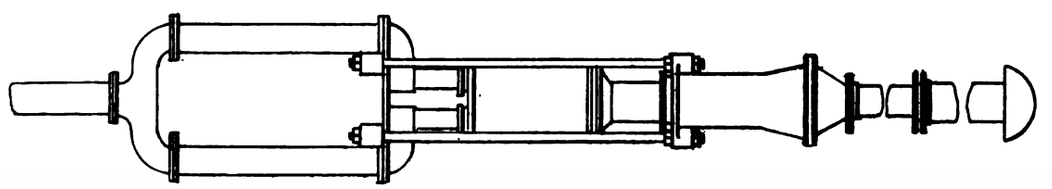

Plate XC.

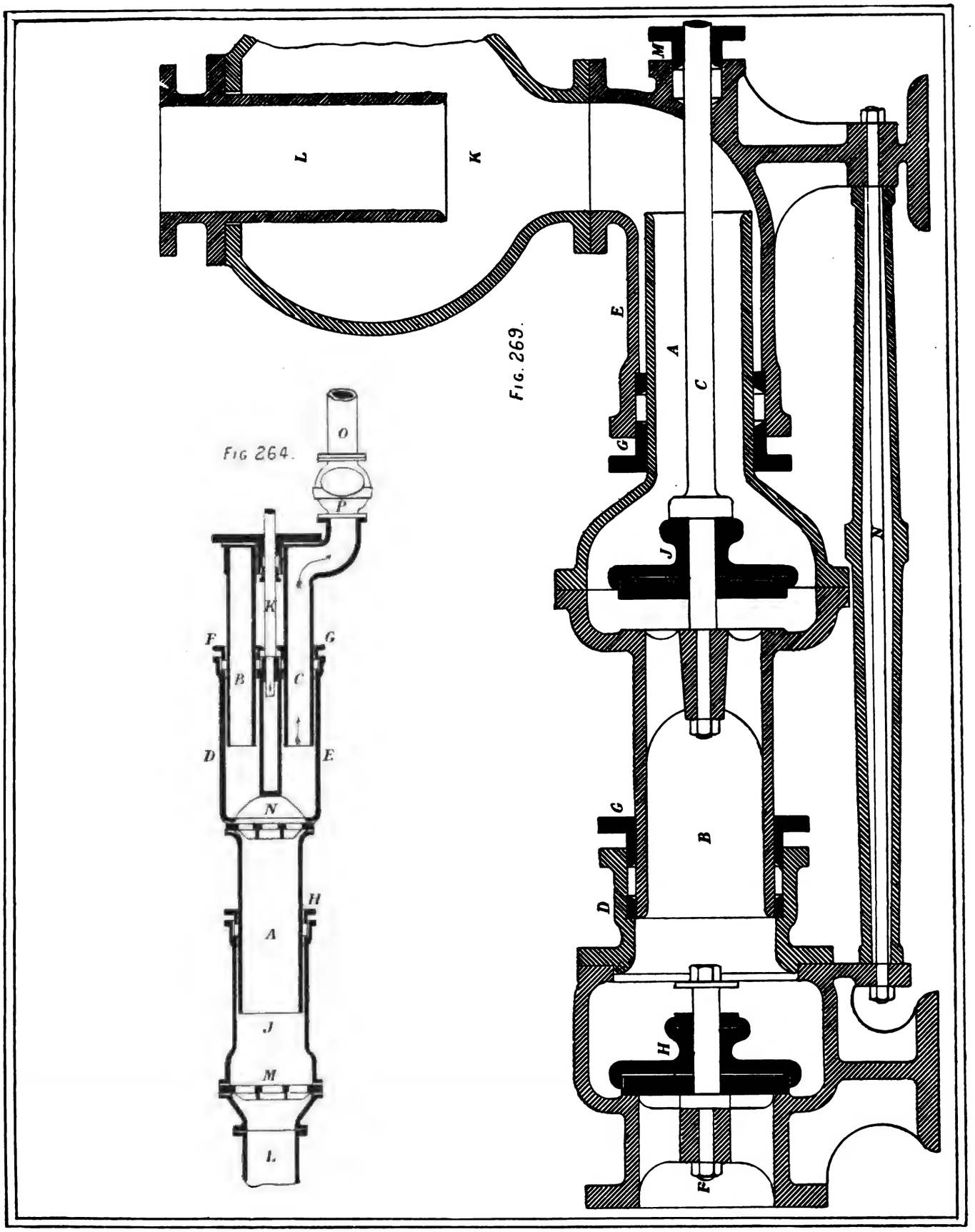

Fig. 269.

Fig 264.

Fig. 270

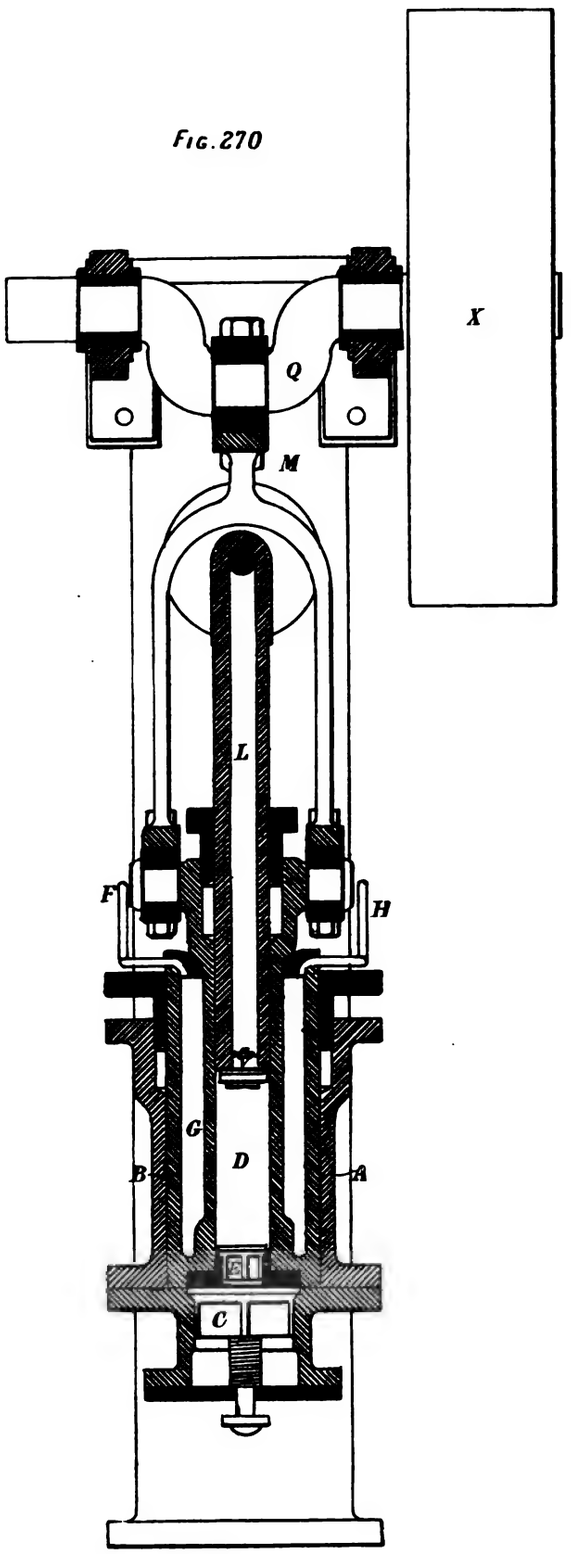

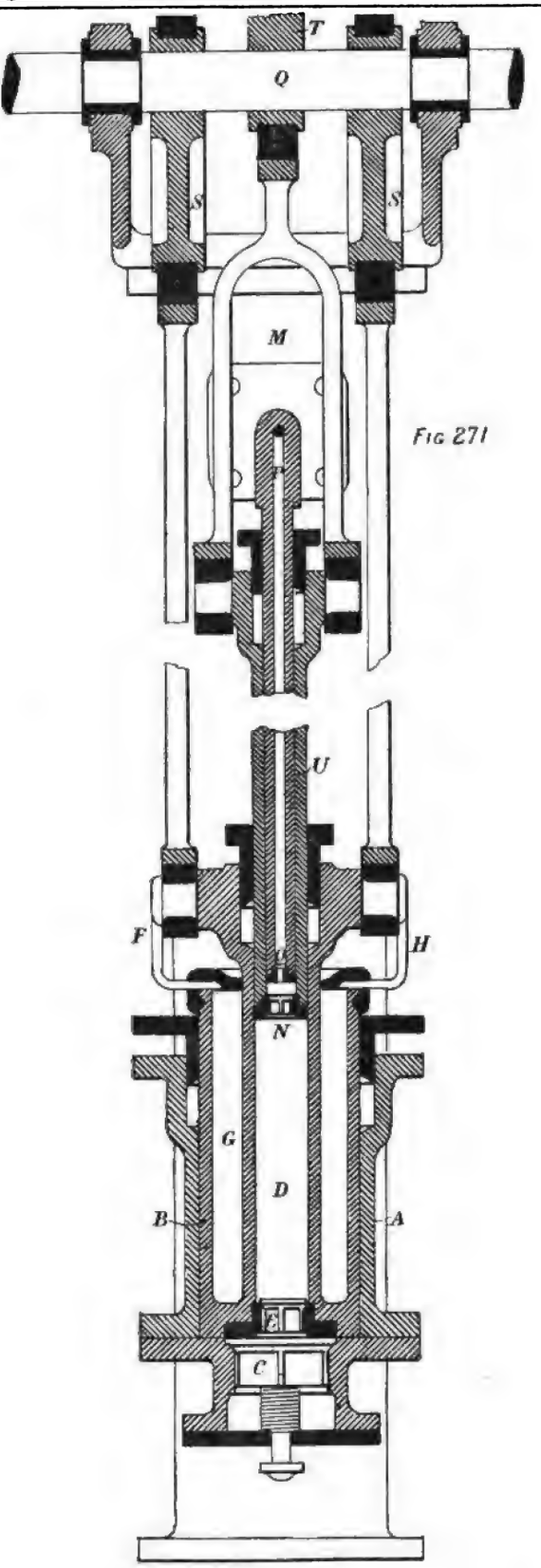

Fig 271

Fig 272.

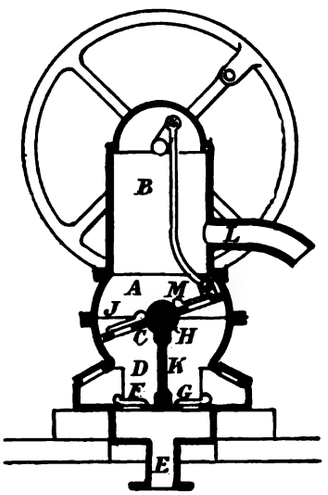

Fig 273

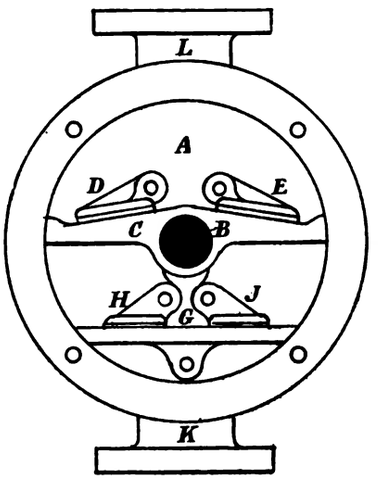

Fig. 274

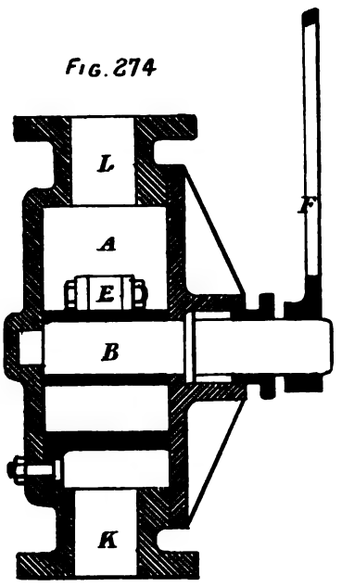

Fig. 275

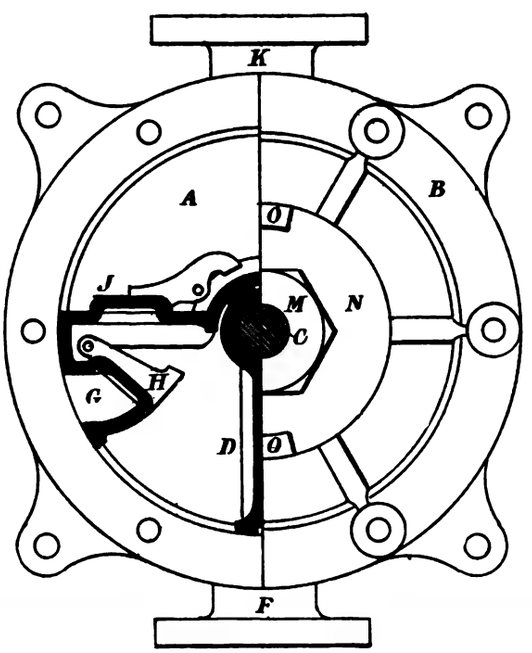

Fig. 276.

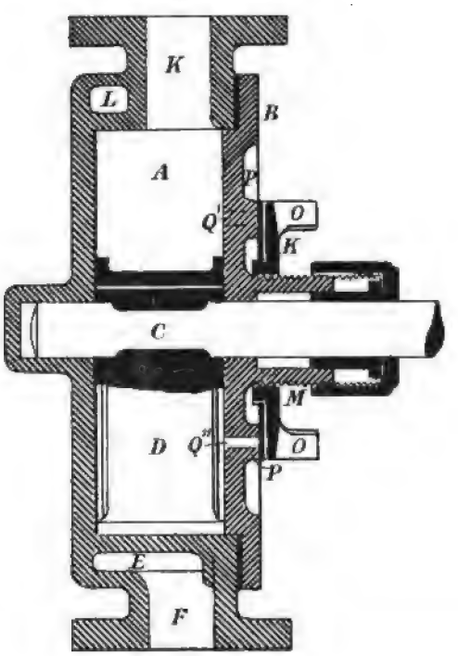

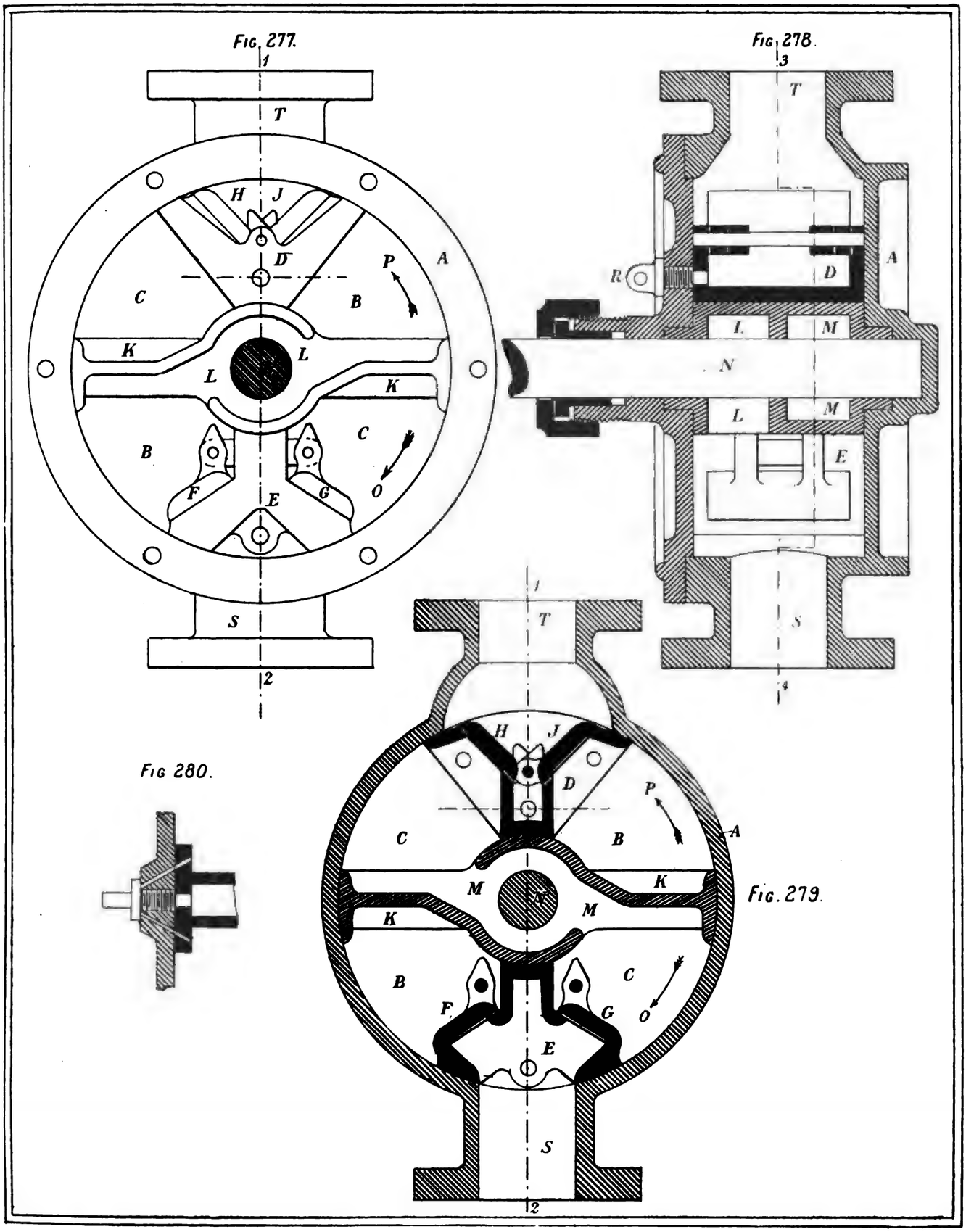
Fig. 277.
1
T
H
J
D
P
A
C
B
K
L
L
K
B
C
F
E
G
O
S
2
Fig. 278.
3
T
A
R
D
L
M
N
L
M
E
S
4
Fig. 280.
Fig. 279.
1
T
H
J
D
P
C
B
A
M
K
K
M
B
C
F
G
O
E
S
2

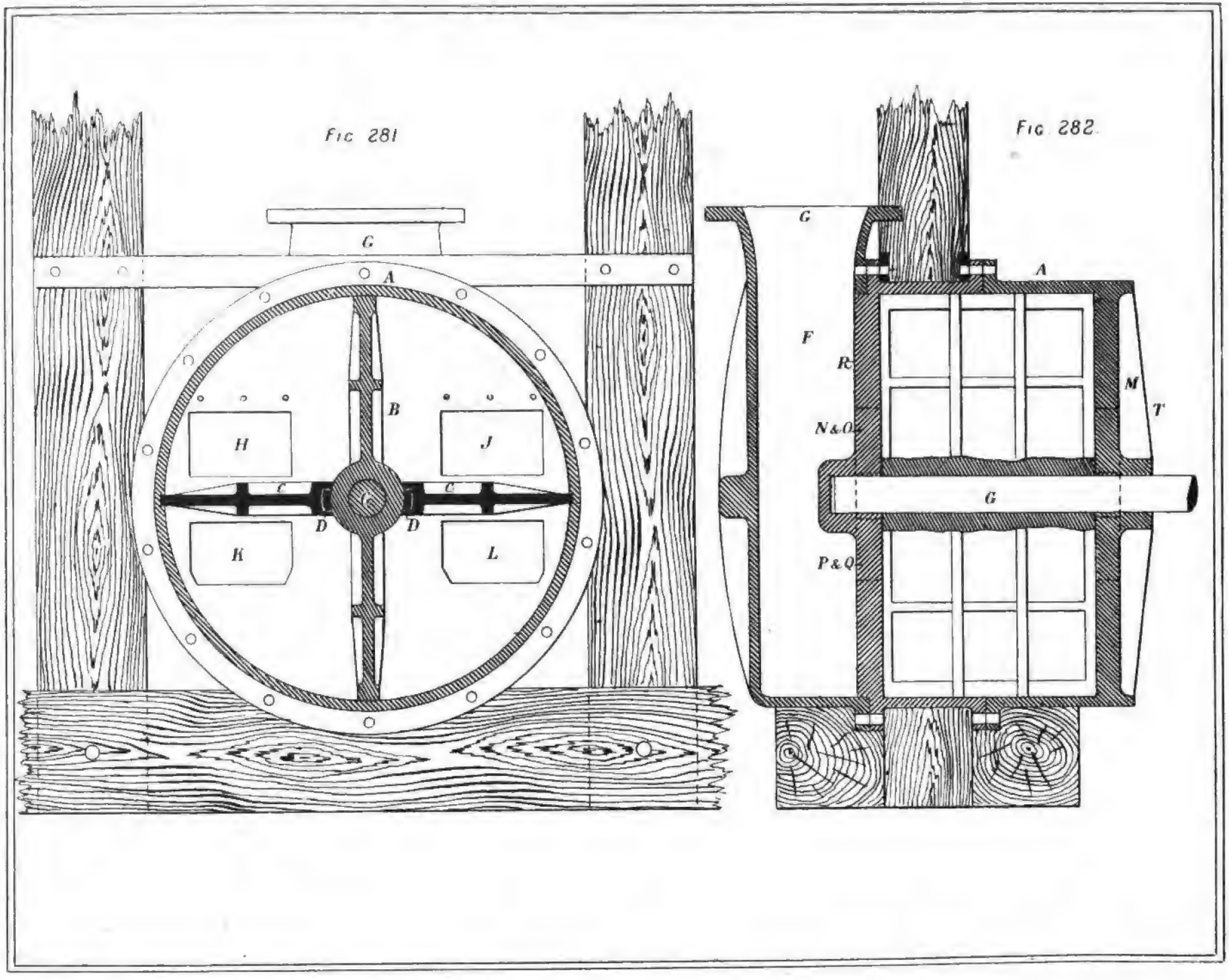

Plate XCIV.

Fig 283.

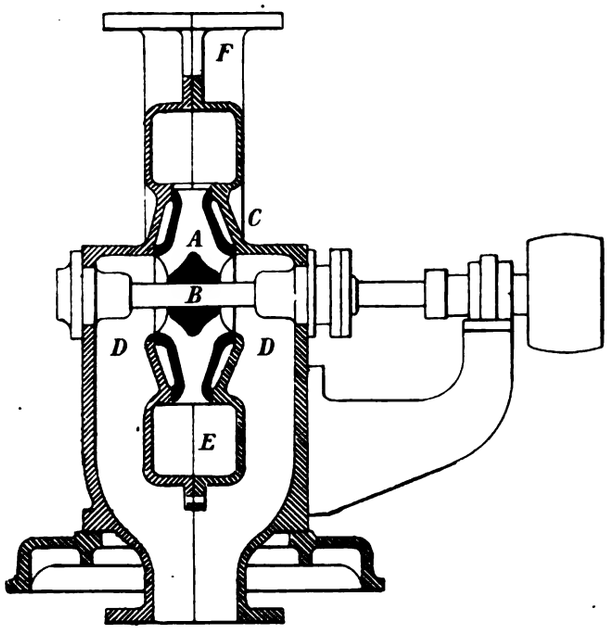

Fig 284

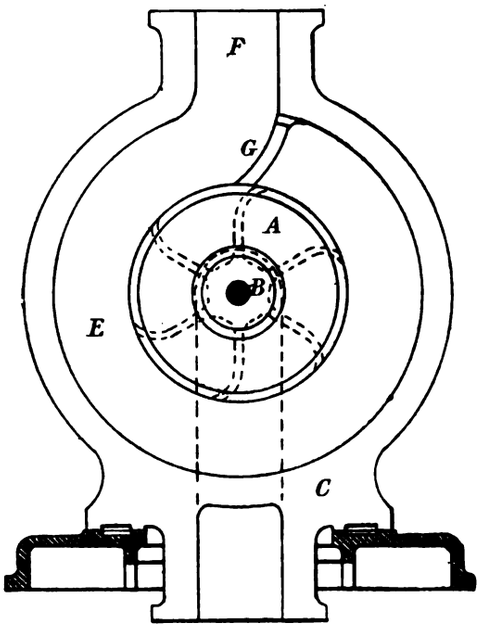

Fig. 285.

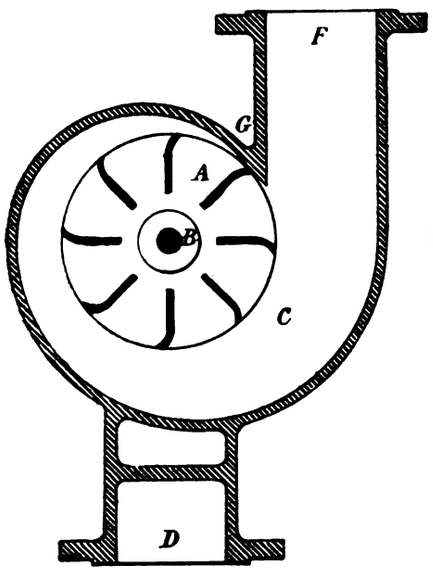

Fig. 286.

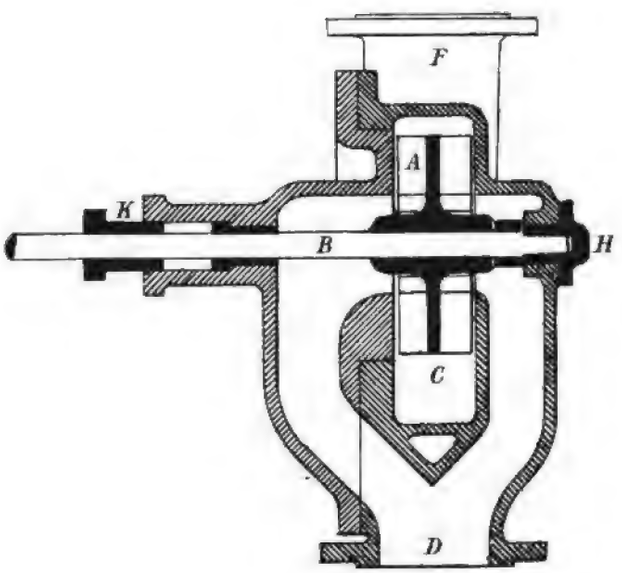

Fig. 287

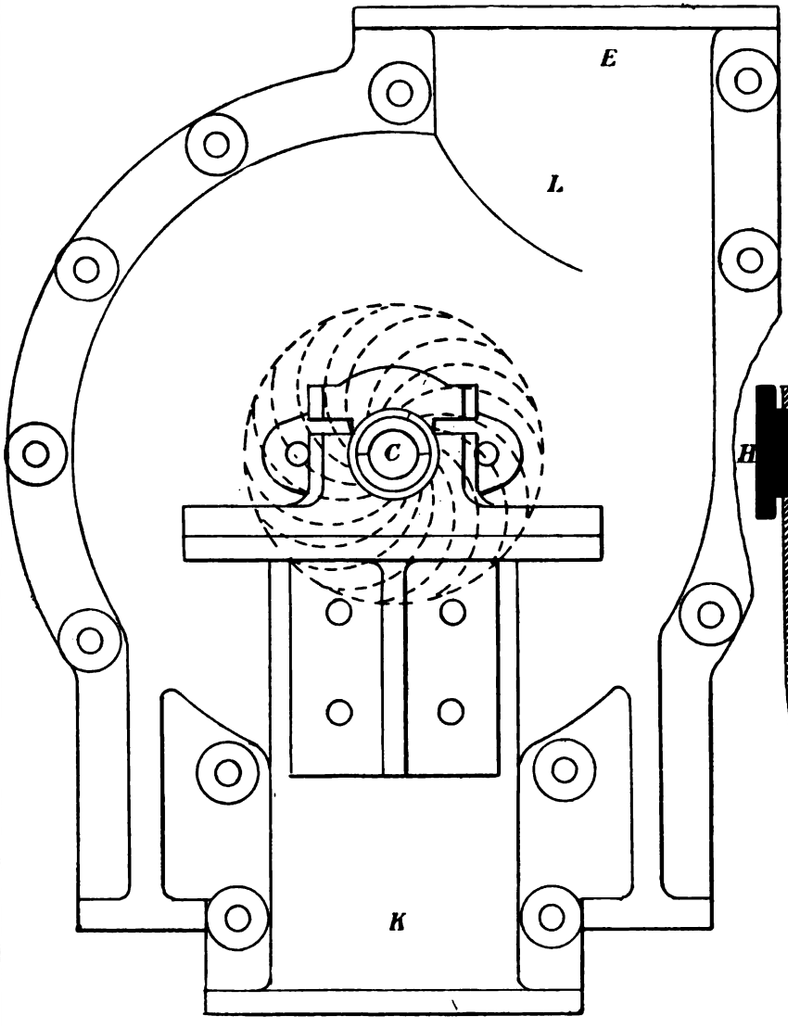

Fig. 288.

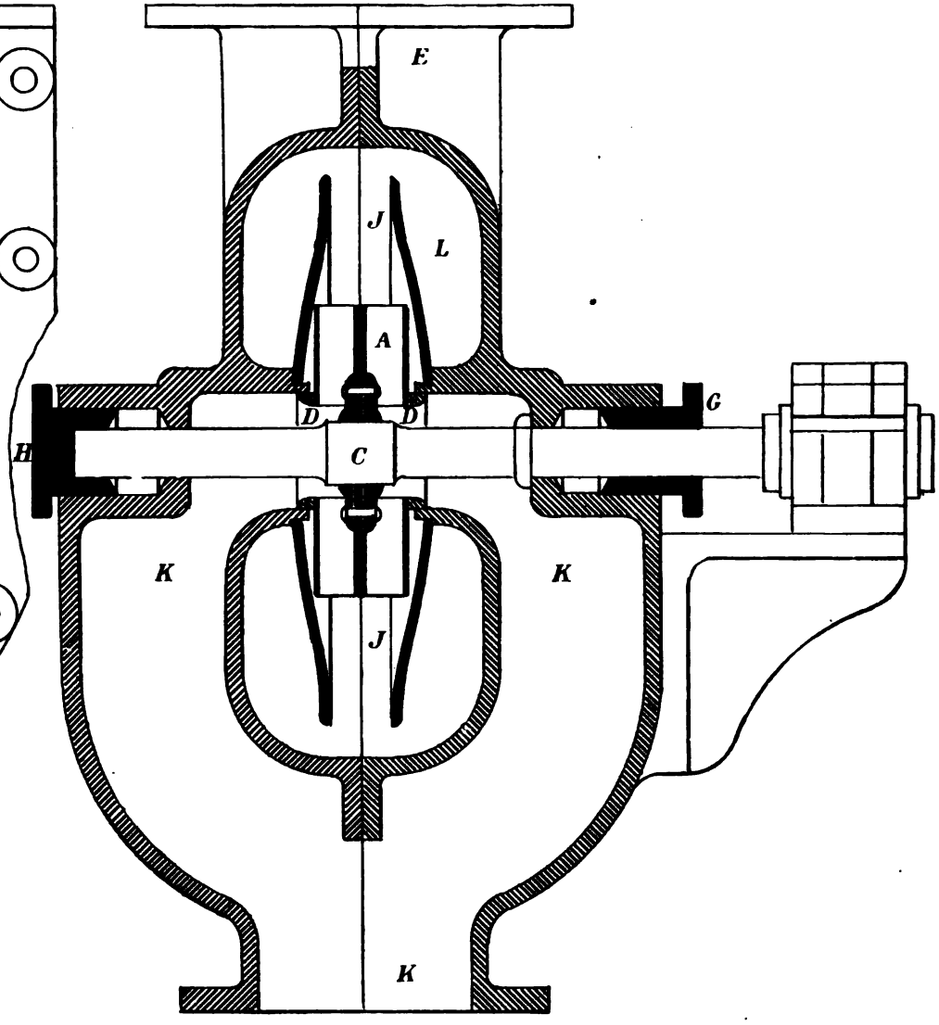

Plate XCVI.

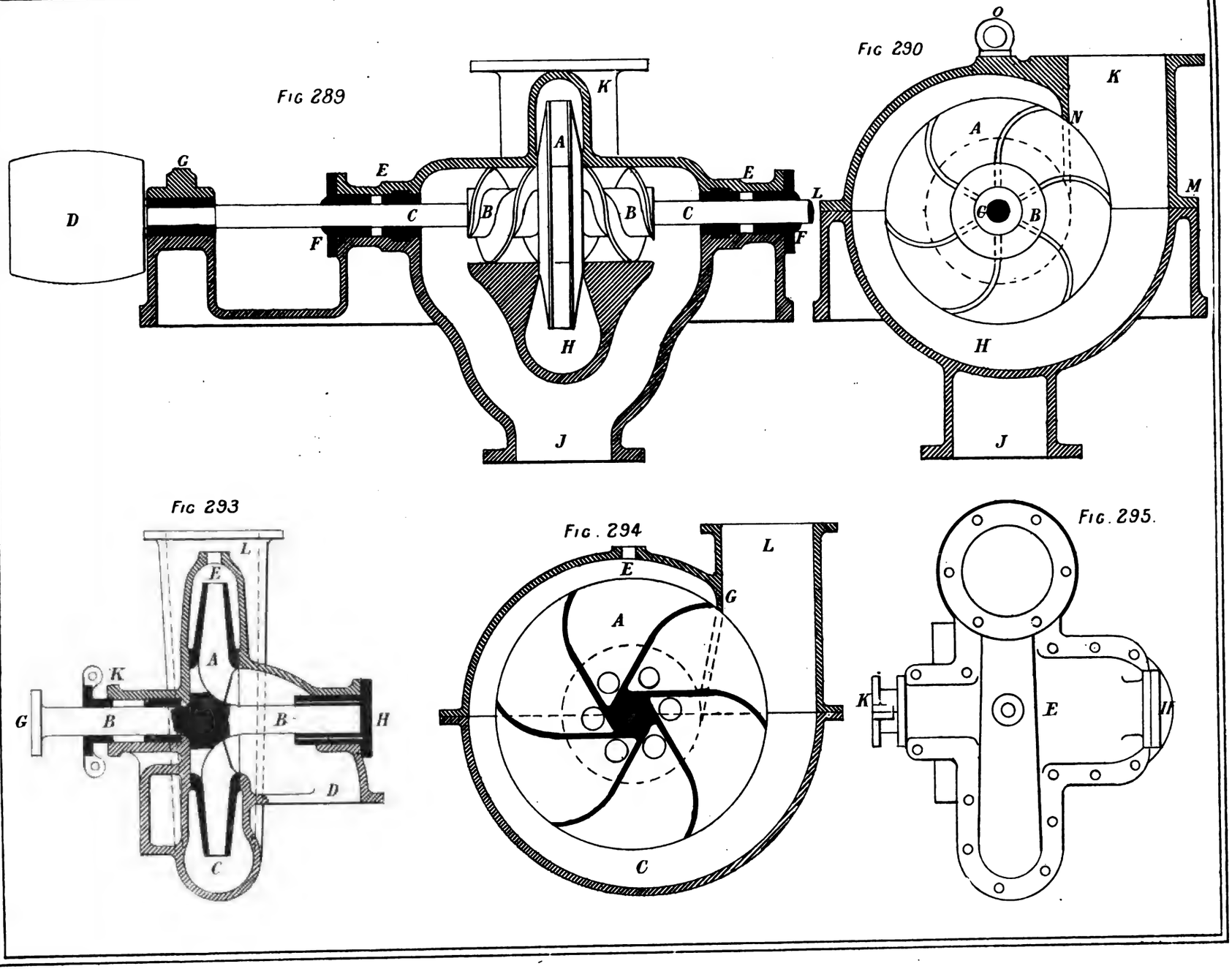
Fig 289
K
A
G
E
E
L
D
C
B
B
C
F
F
H
J
Fig 290
O
K
N
A
M
G
B
H
J
Fig 293
L
E
A
K
G
B
B
H
D
C
Fig. 294
L
E
G
A
C
Fig. 295.
K
E
H

Plate. XCVII.

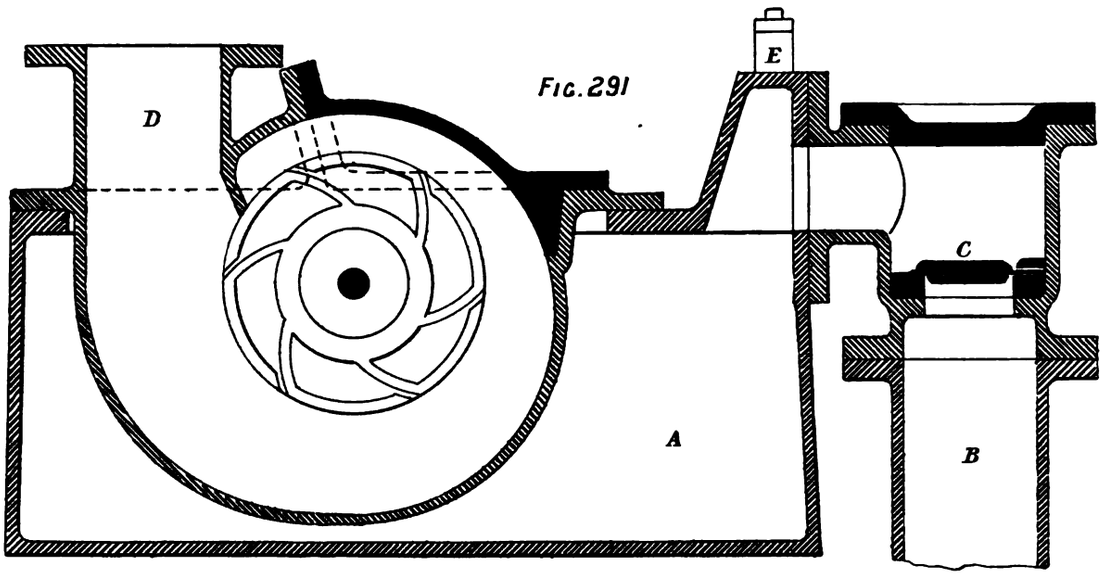

Fig. 291

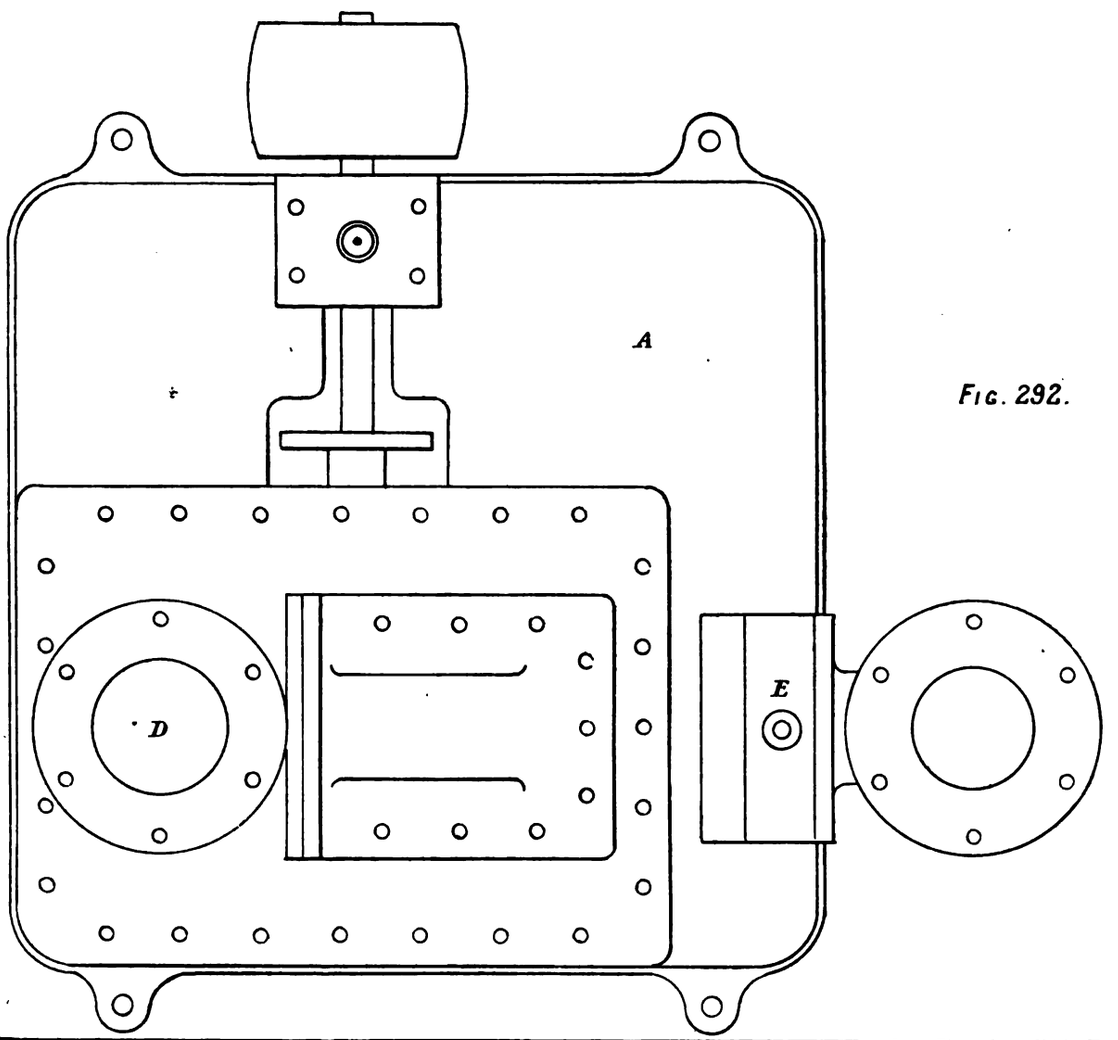

Fig. 292.

Fig. 298.

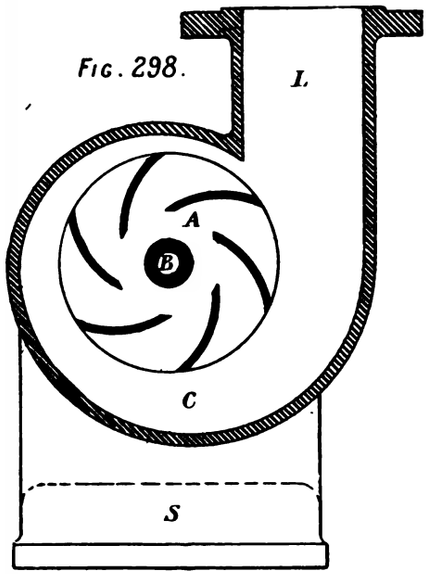

Fig 297.

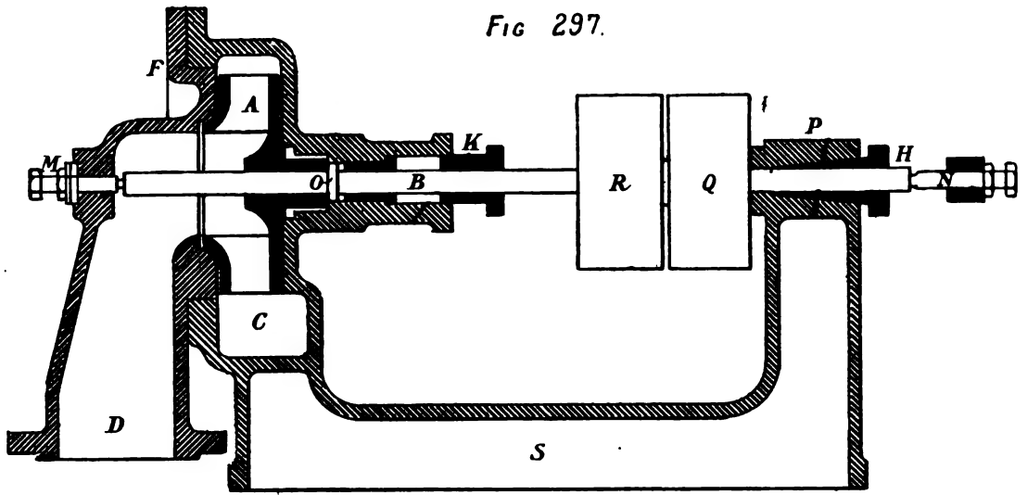

Fig. 296.

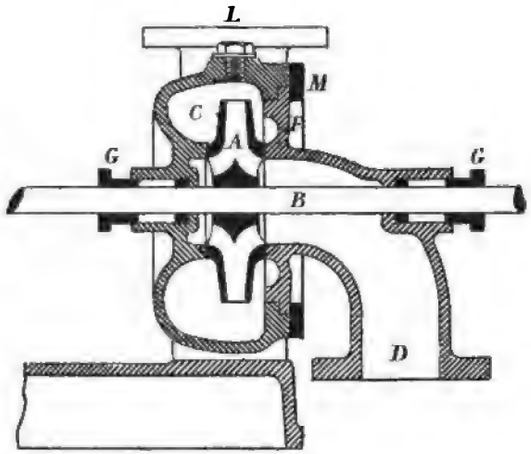

Fig. 299

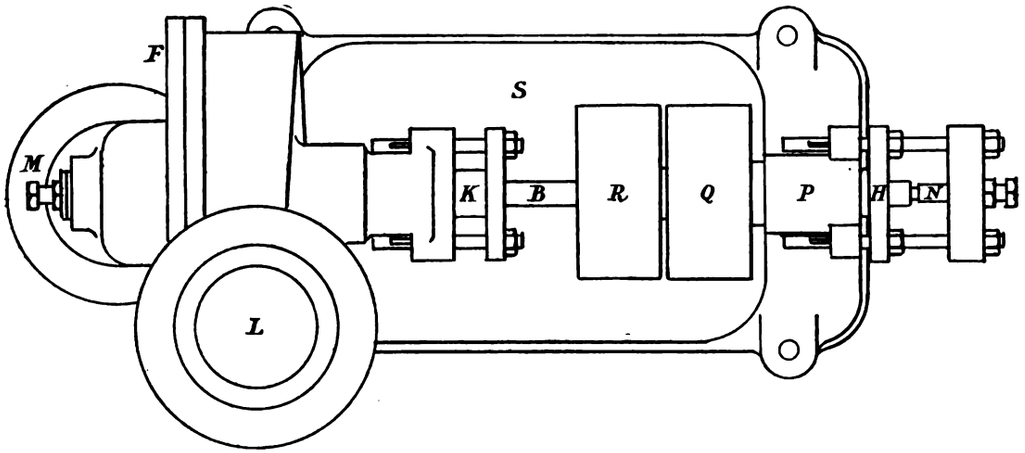

Plate XCIX.

Fig.300.

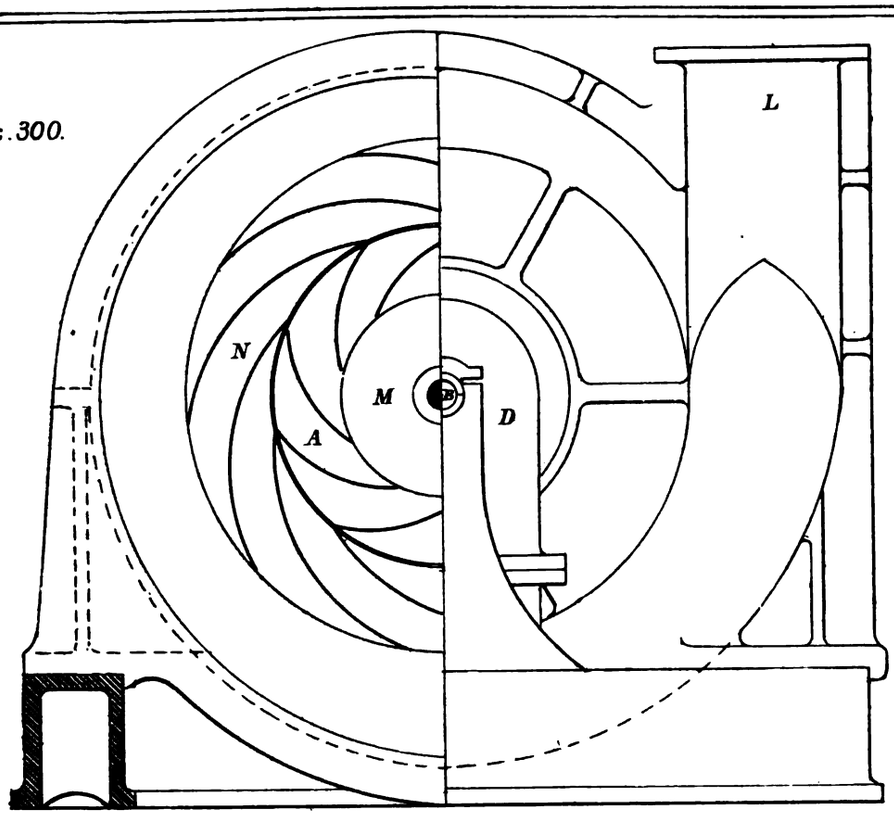

Fig.301.

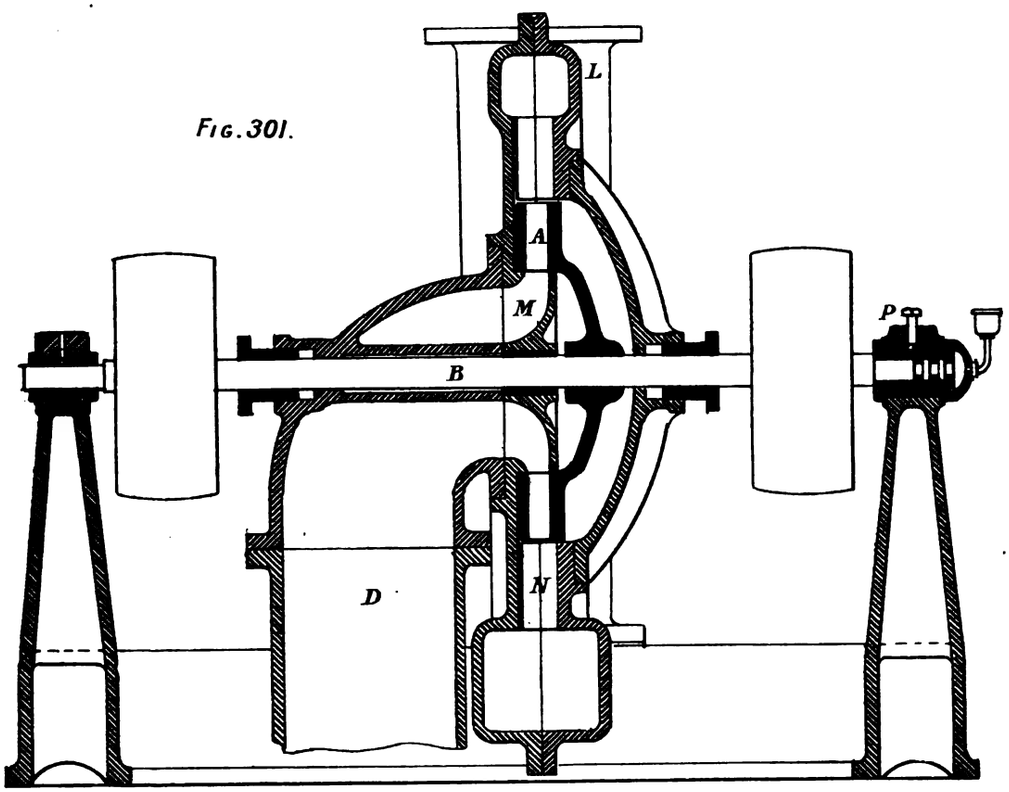

Fig.302.

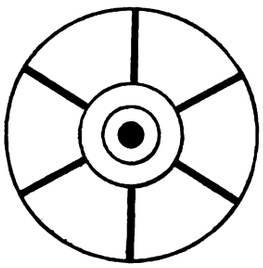

Fig.303.

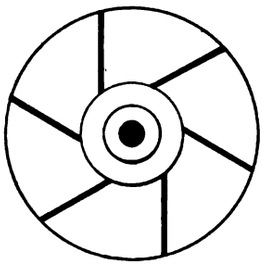

Fig.304.

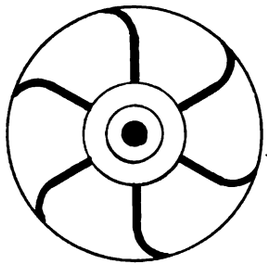

Fig.305.

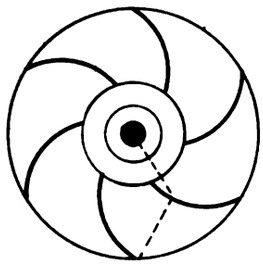

Fig.306.

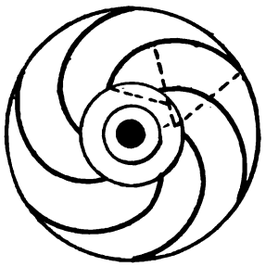

Fig.307.

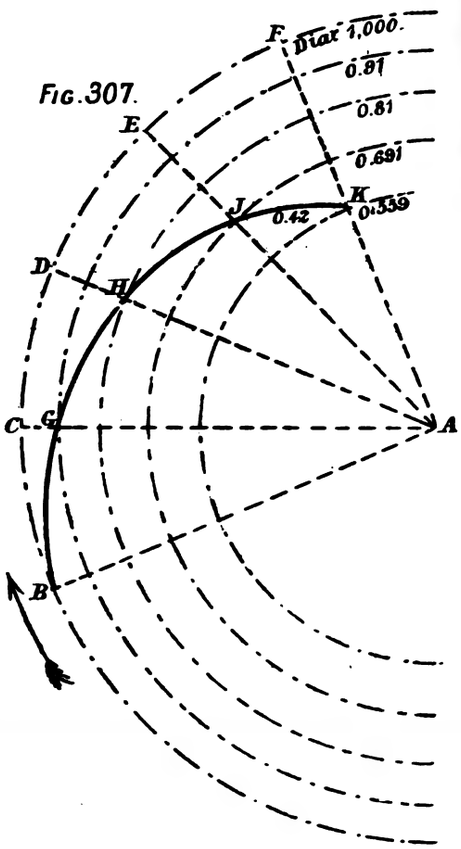

Fig.309

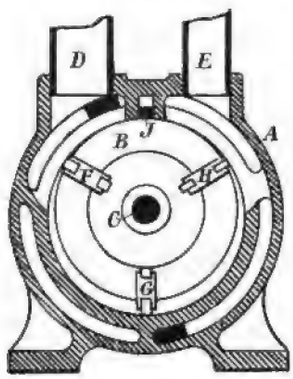

Fig.308.

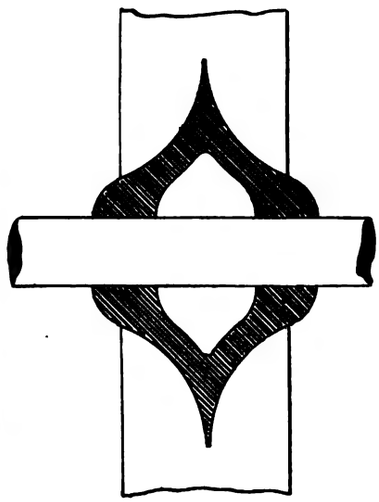

Fig.310.

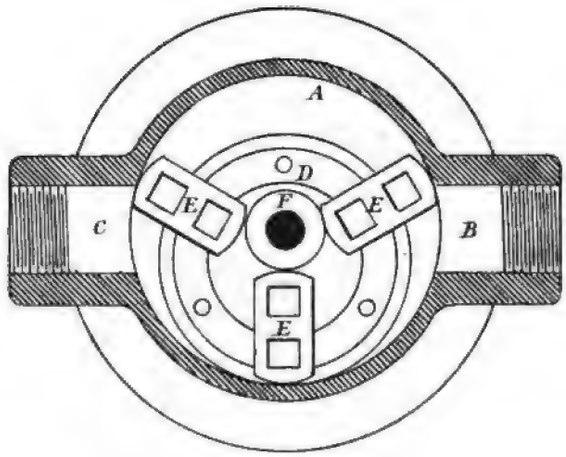

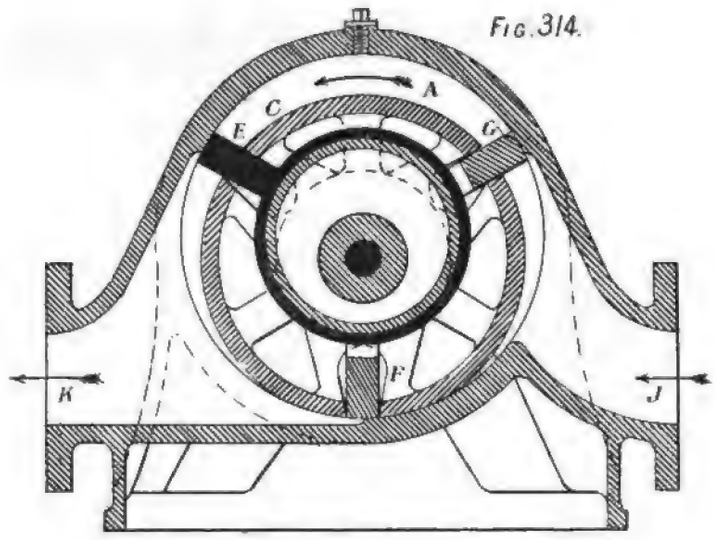

Fig. 314.

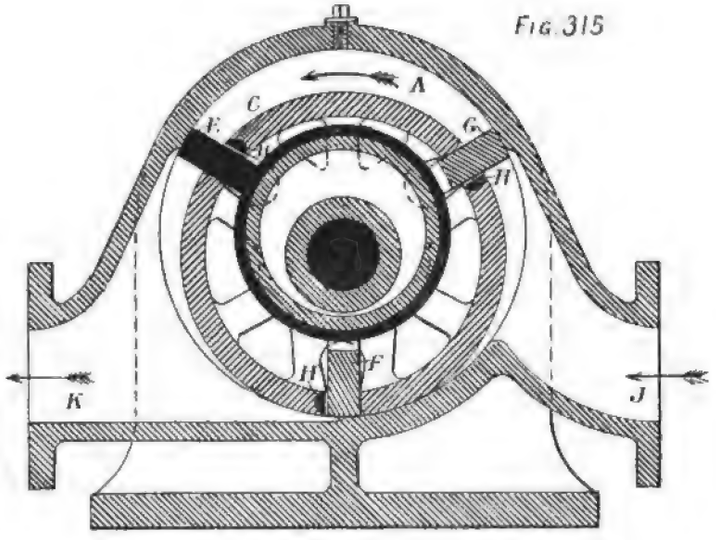

Fig. 315

Fig 311.

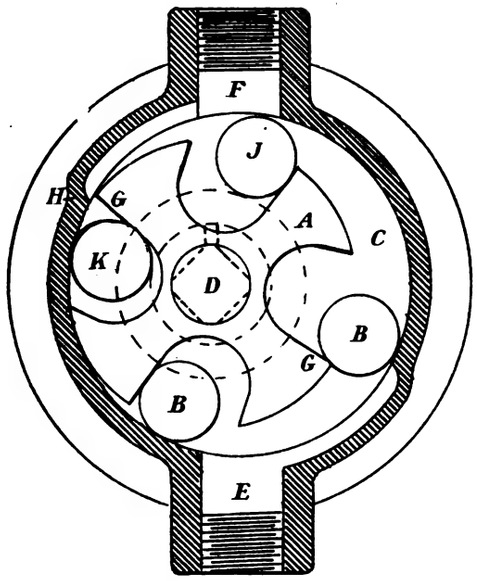

Fig. 312.

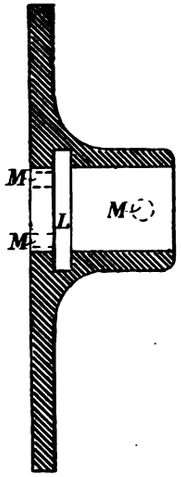

Fig 313.

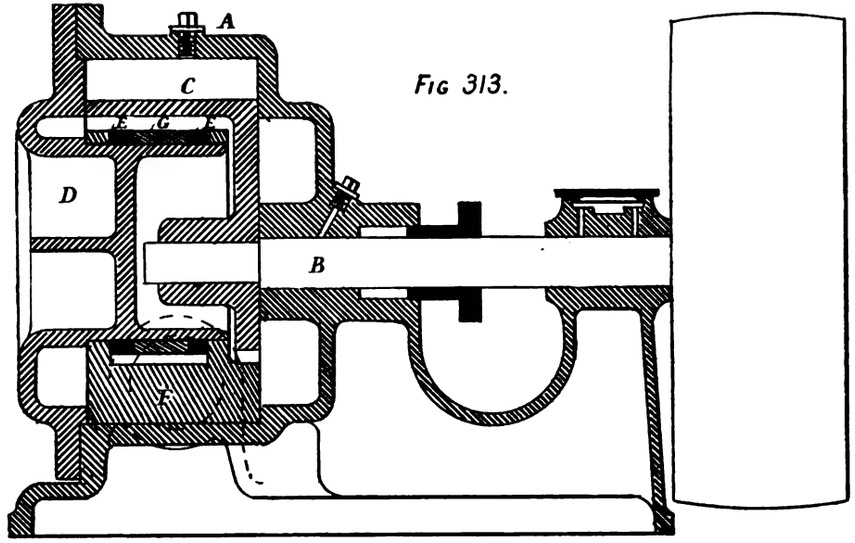

Plate CII.

Fig 316.

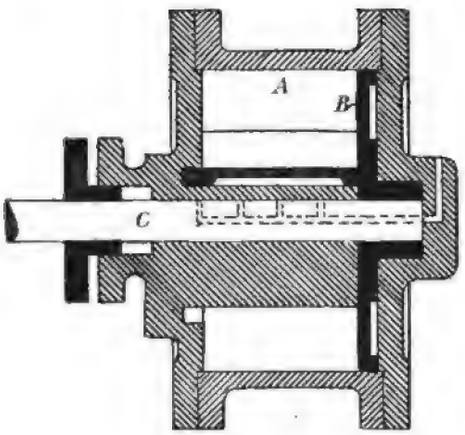

Fig. 318.

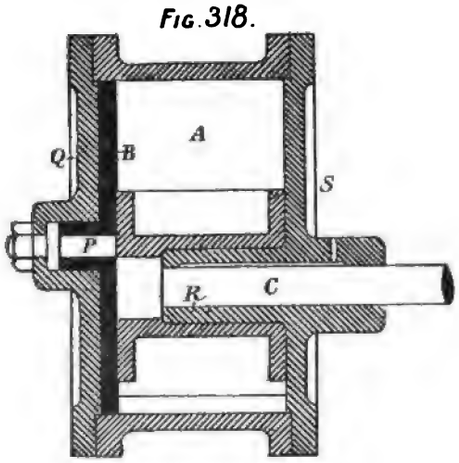

Fig. 319.

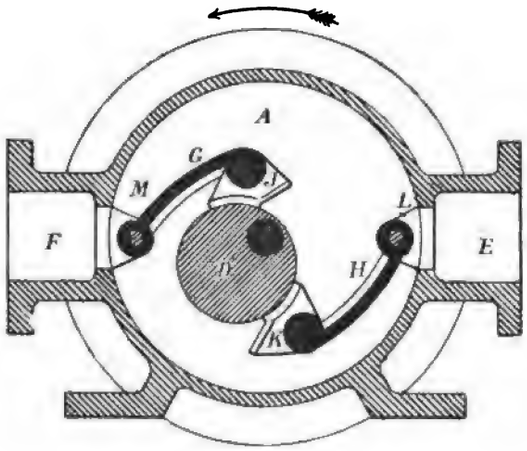

Fig. 317.

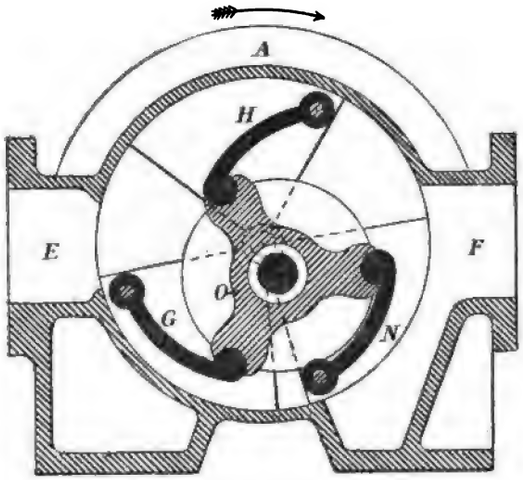

Fig. 320

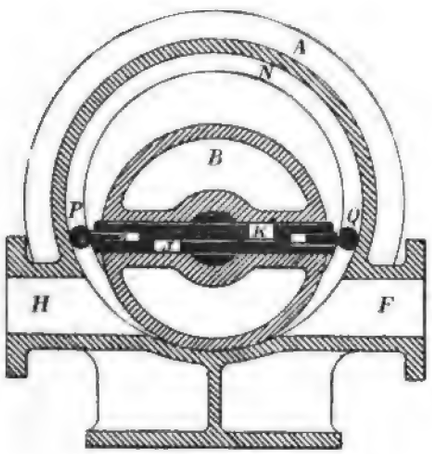

Fig. 321.

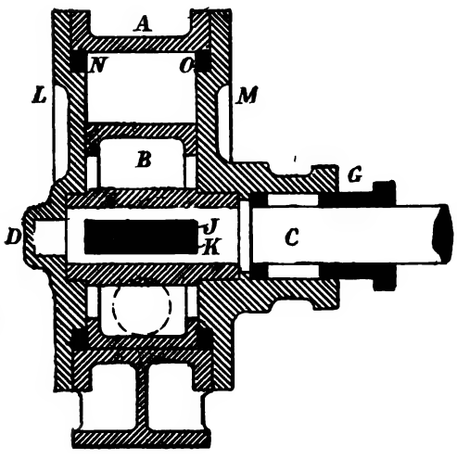

Fig. 322.

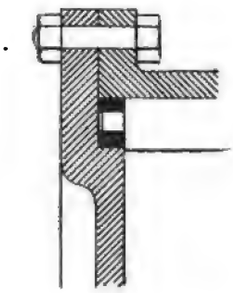

Fig.323.

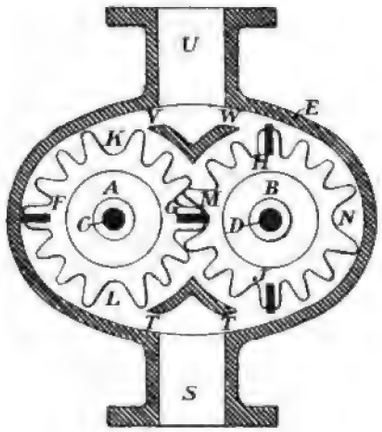

Fig.325.

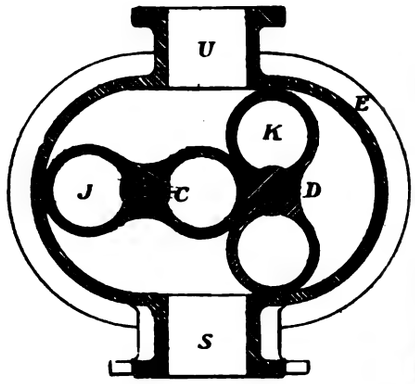

Fig 324

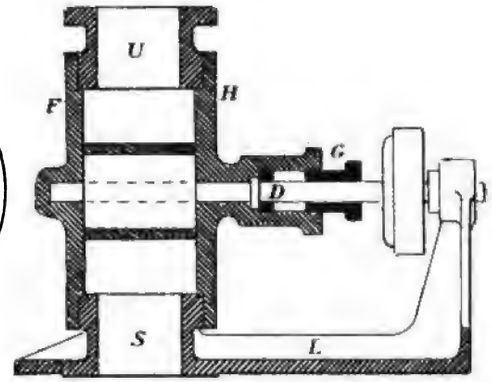

Fig 326

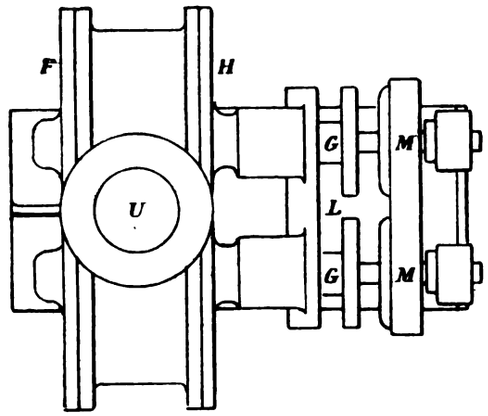

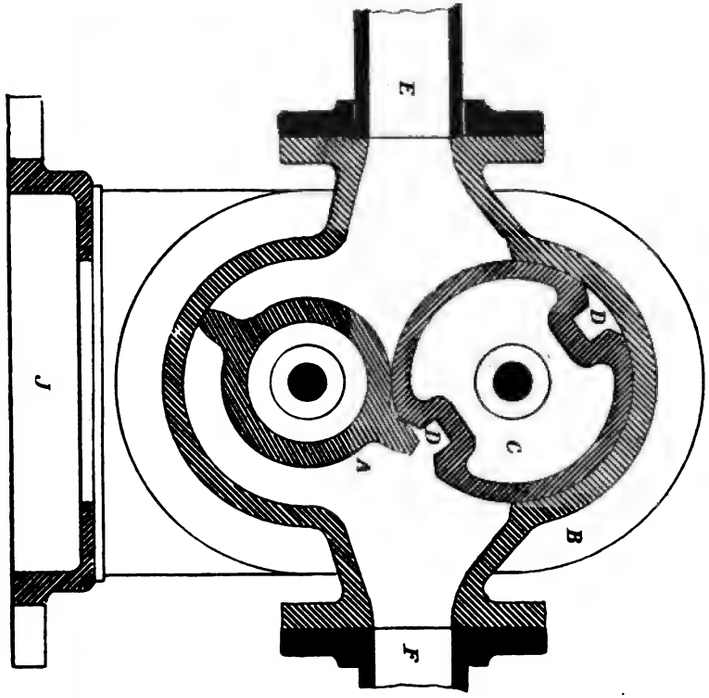

Fig.327.

Plate CIV.

Fig 328

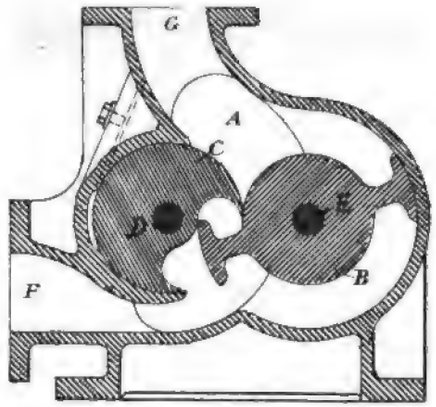

Fig 329.

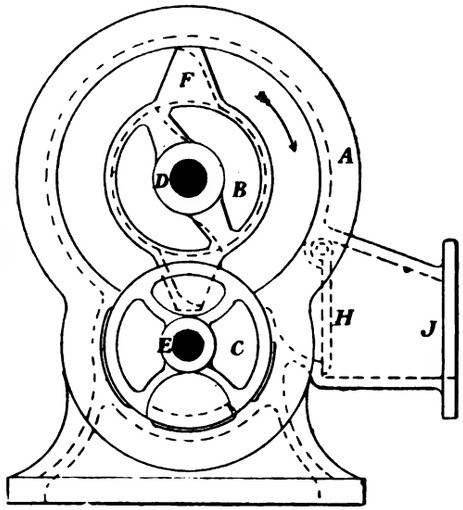

Fig 330

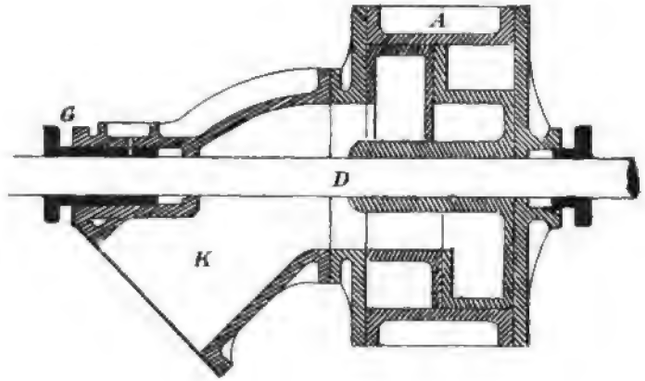

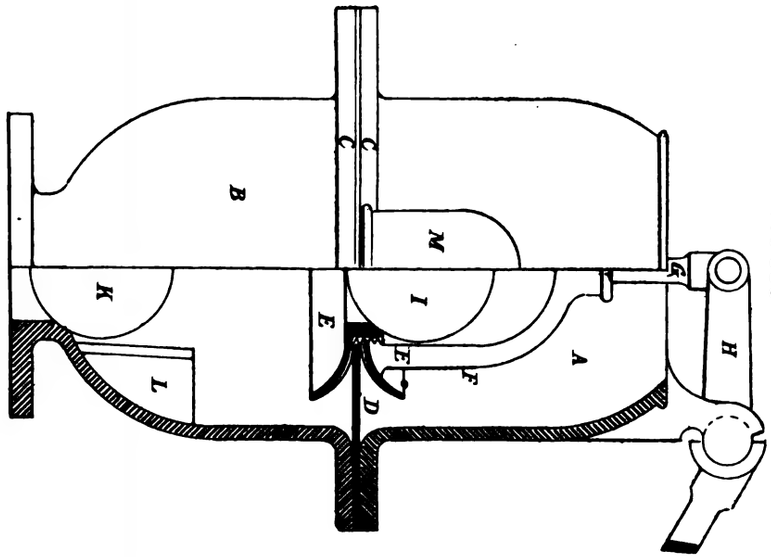

Fig 338

Fig.336.

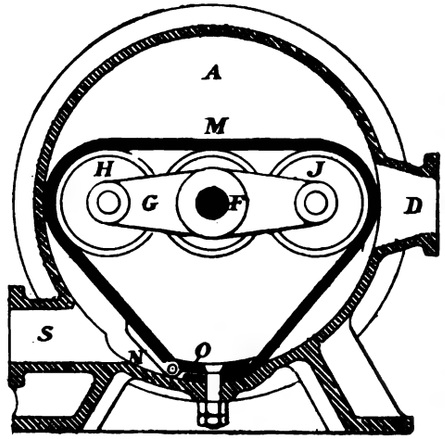

Fig.337.

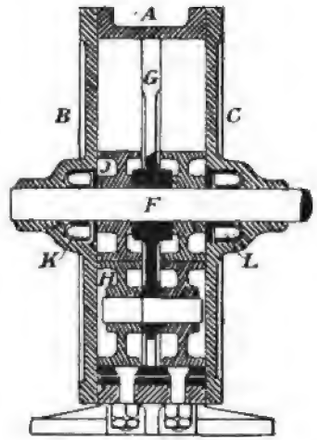

Plate CV.

Fig.331.

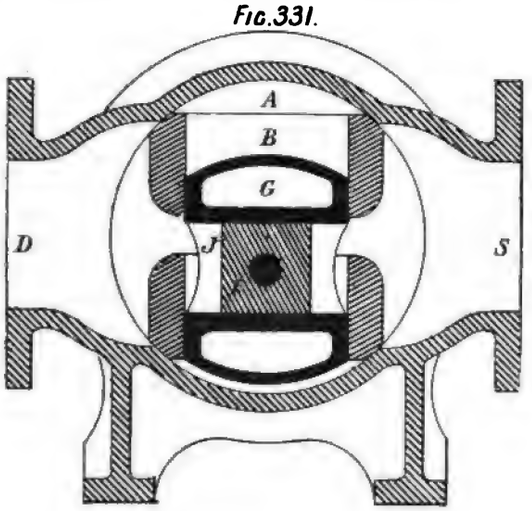

Fig.332.

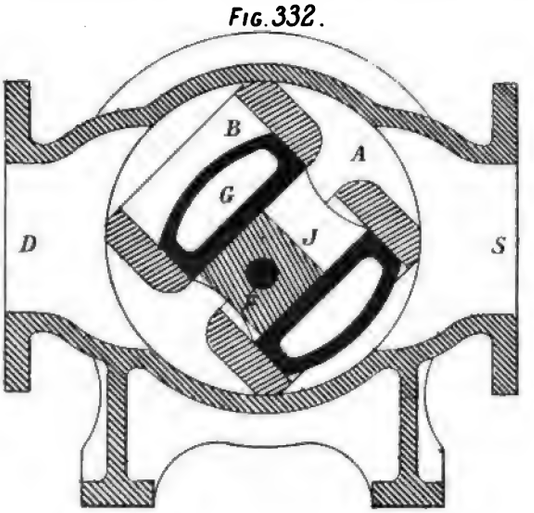

Fig.333.

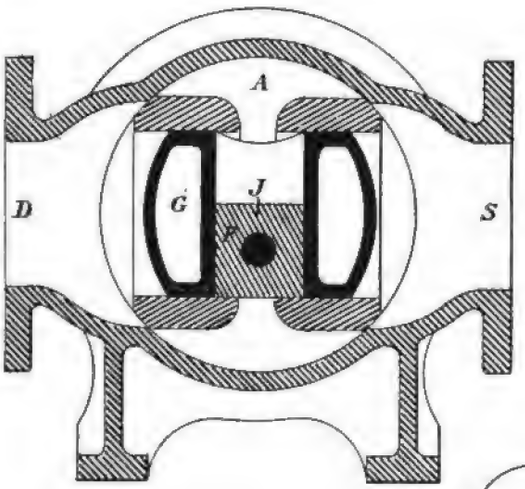

Fig 334.

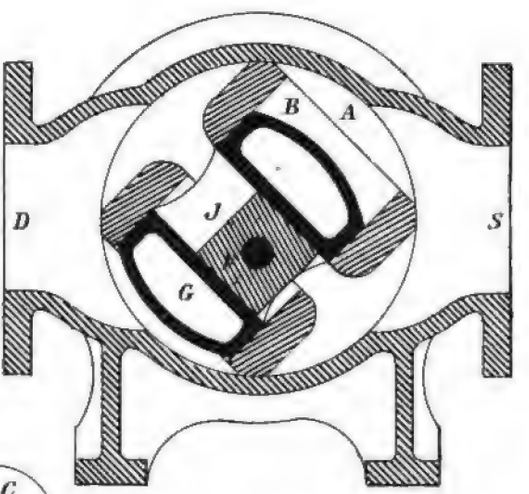

Fig 335.

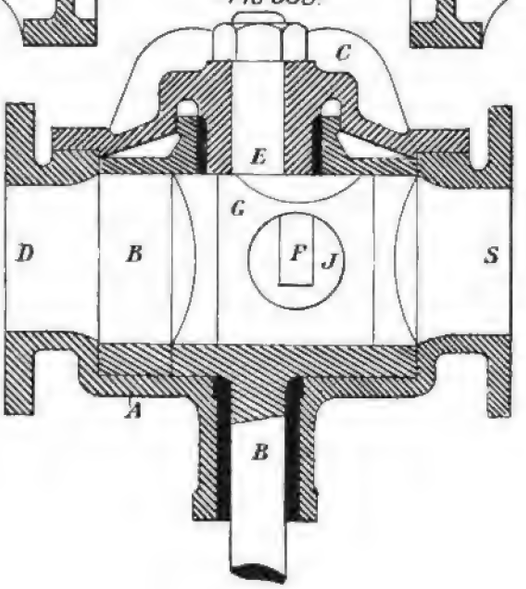

Fig. 339.

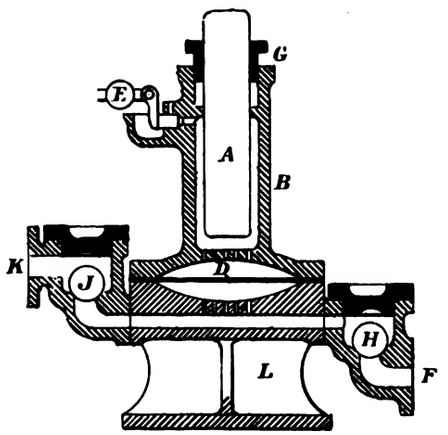

Fig. 342.

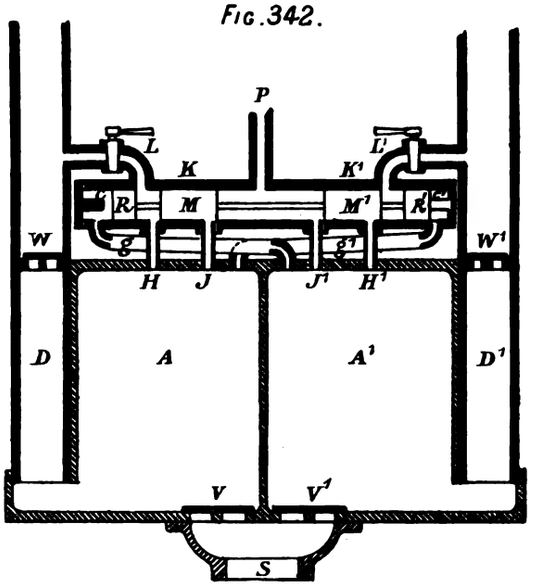

Fig. 341.

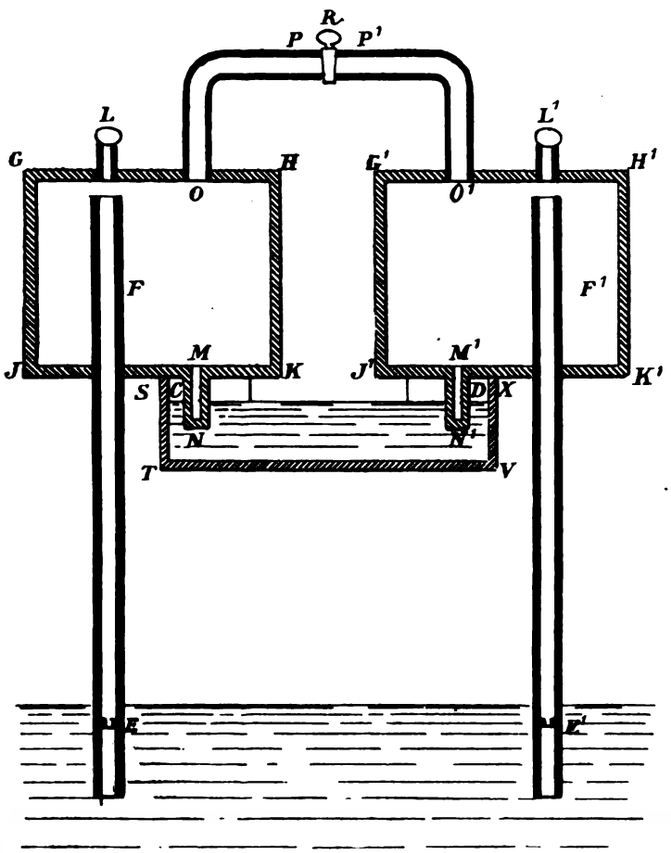

Fig. 340.

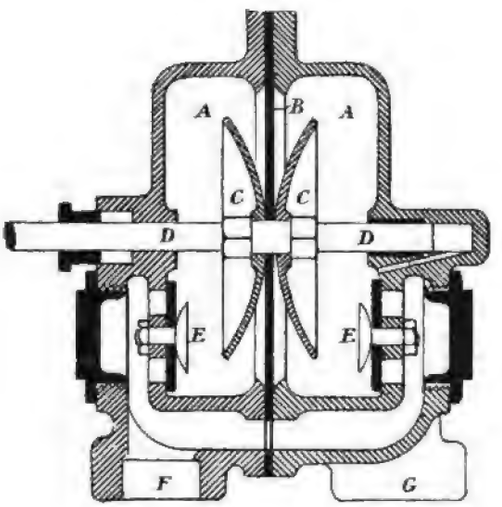

Fig. 345.

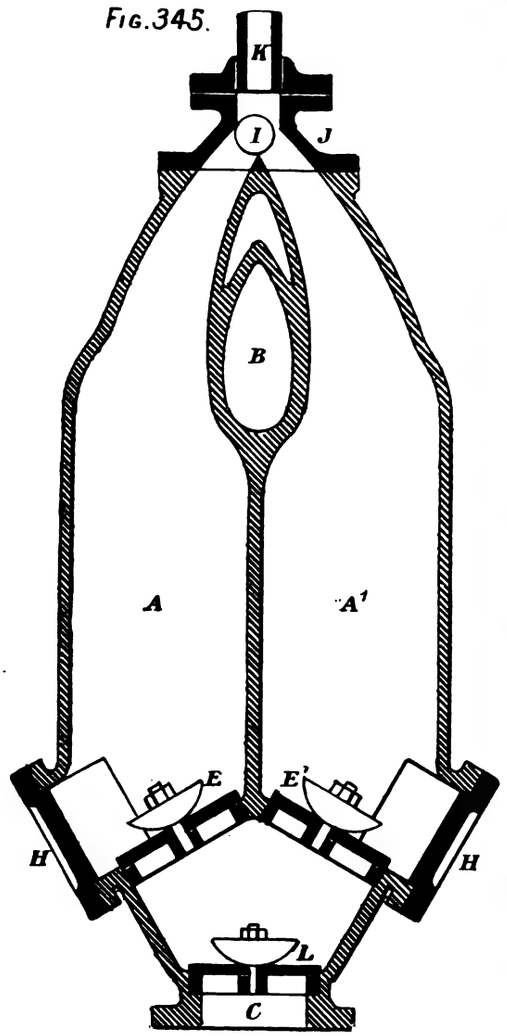

Fig. 346.

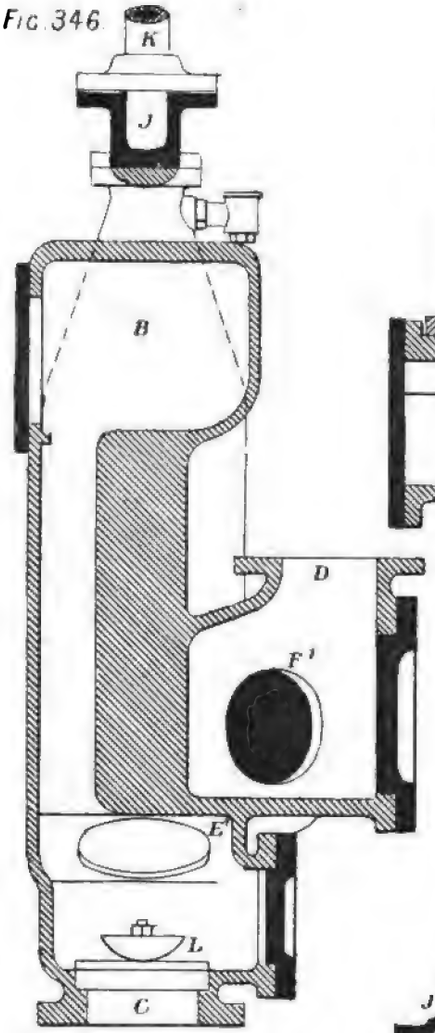

Fig. 344.

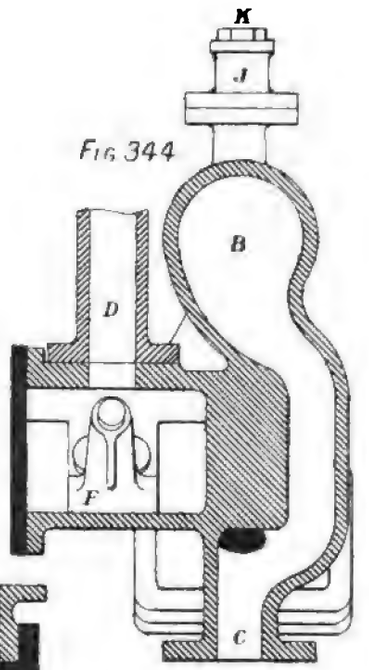

Fig. 343.

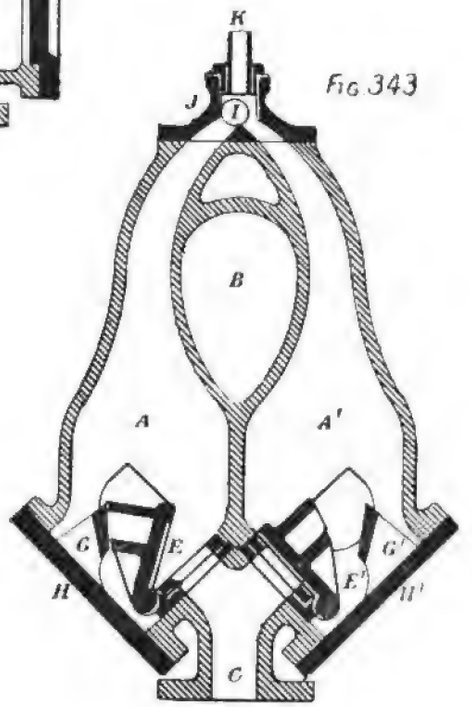

Fig. 347.

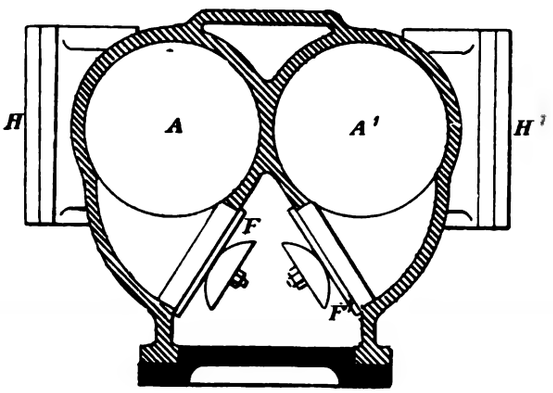

Fig.348.

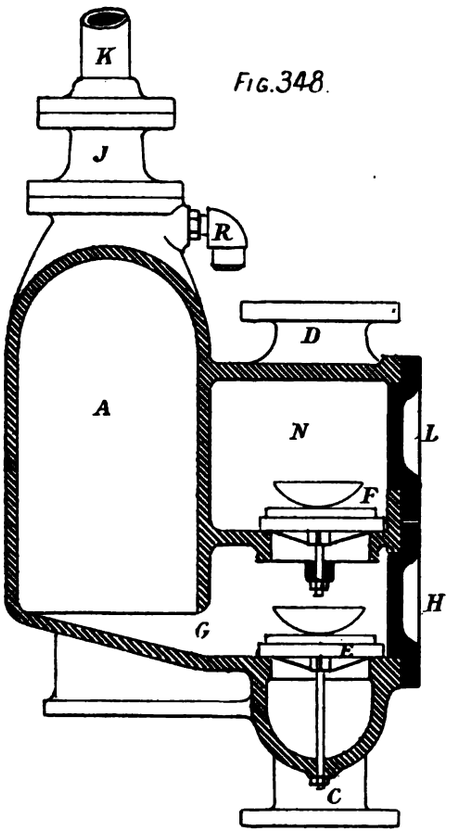

Fig.349.

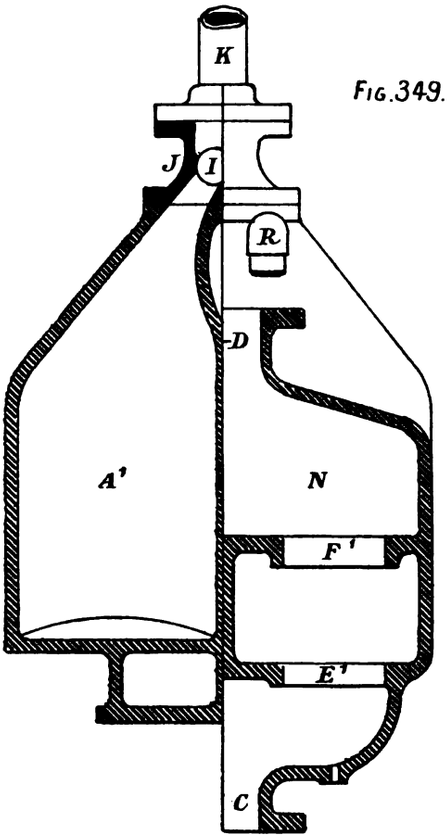

Fig.350

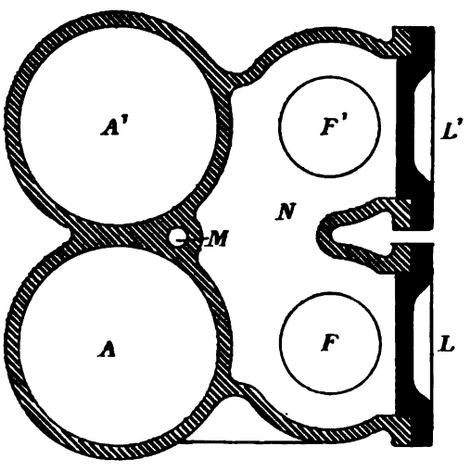

Fig 351

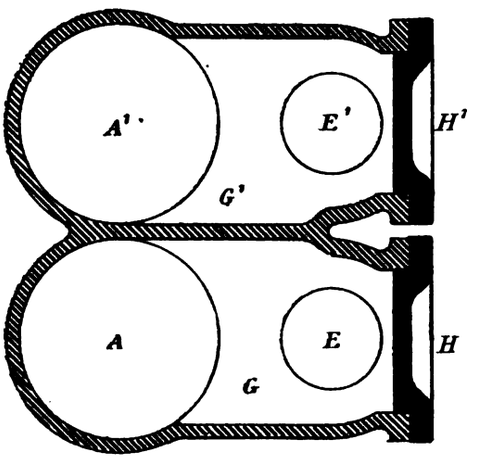

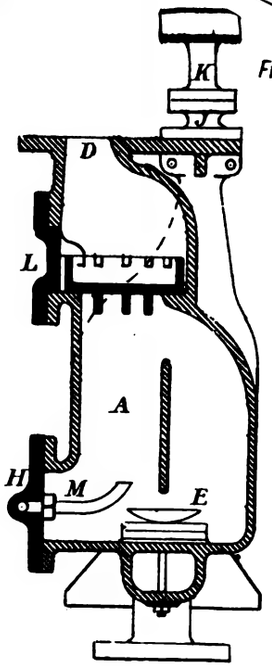

Fig.353

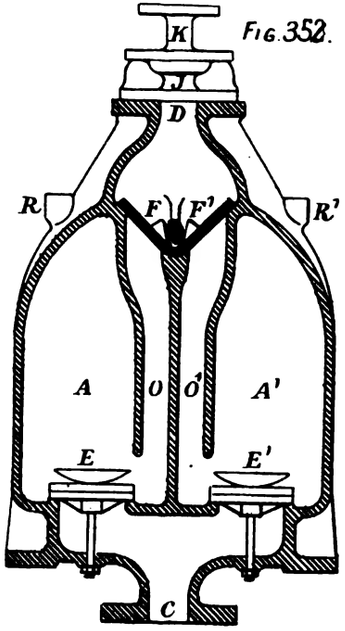

Fig.352.

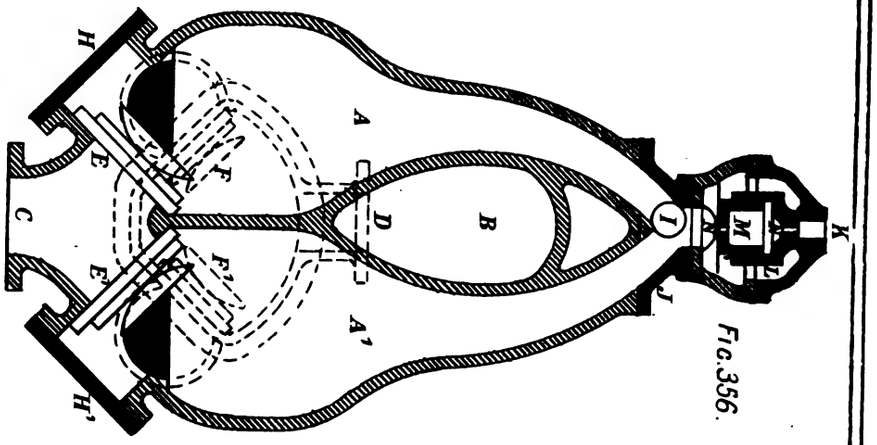

Fig.356.

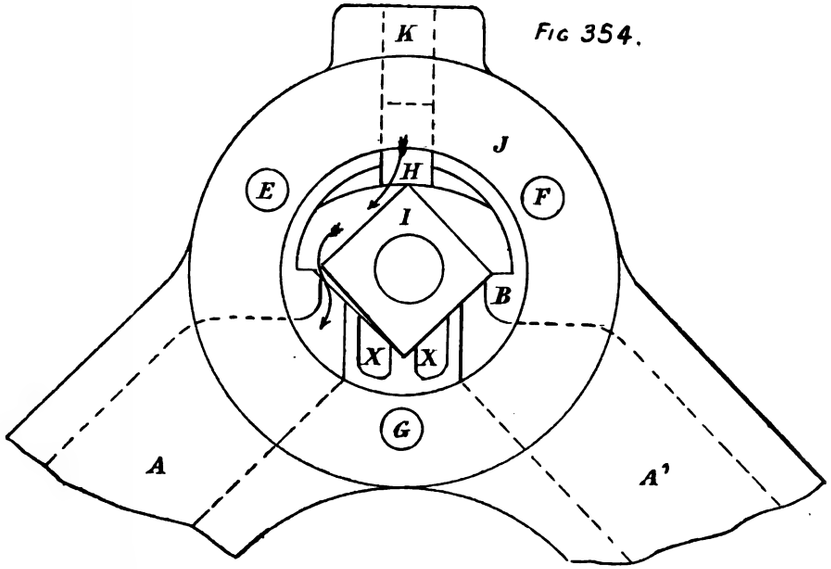

Fig 354.

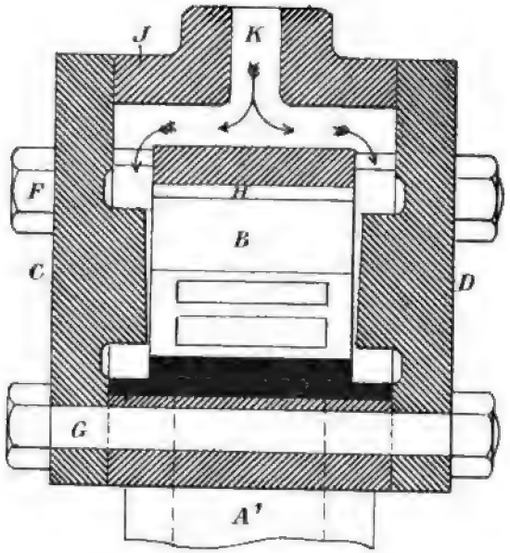

Fig.355.

Plate CX.

Fig.360.

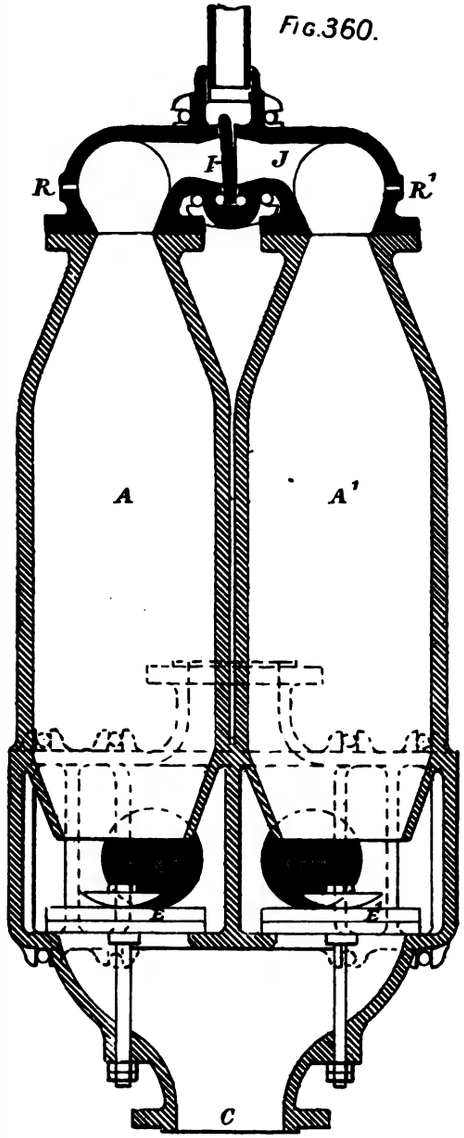

Fig.357

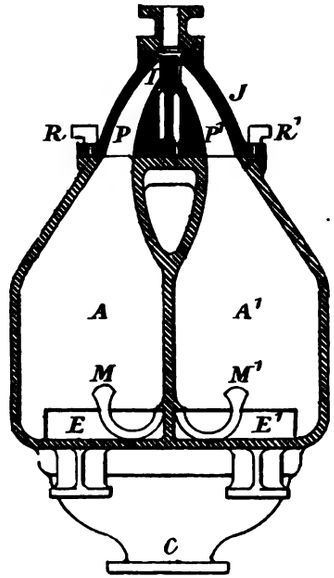

Fig 358

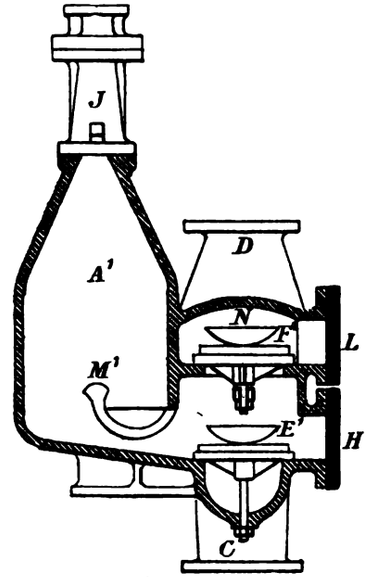

Fig.361.

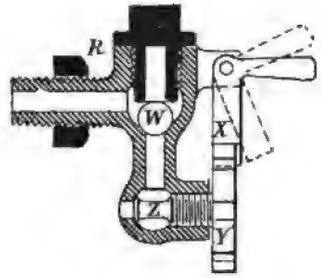

Fig 359.

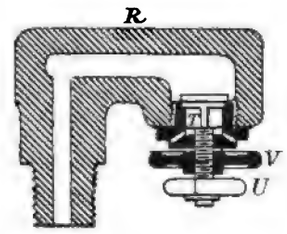

Plate CXI.

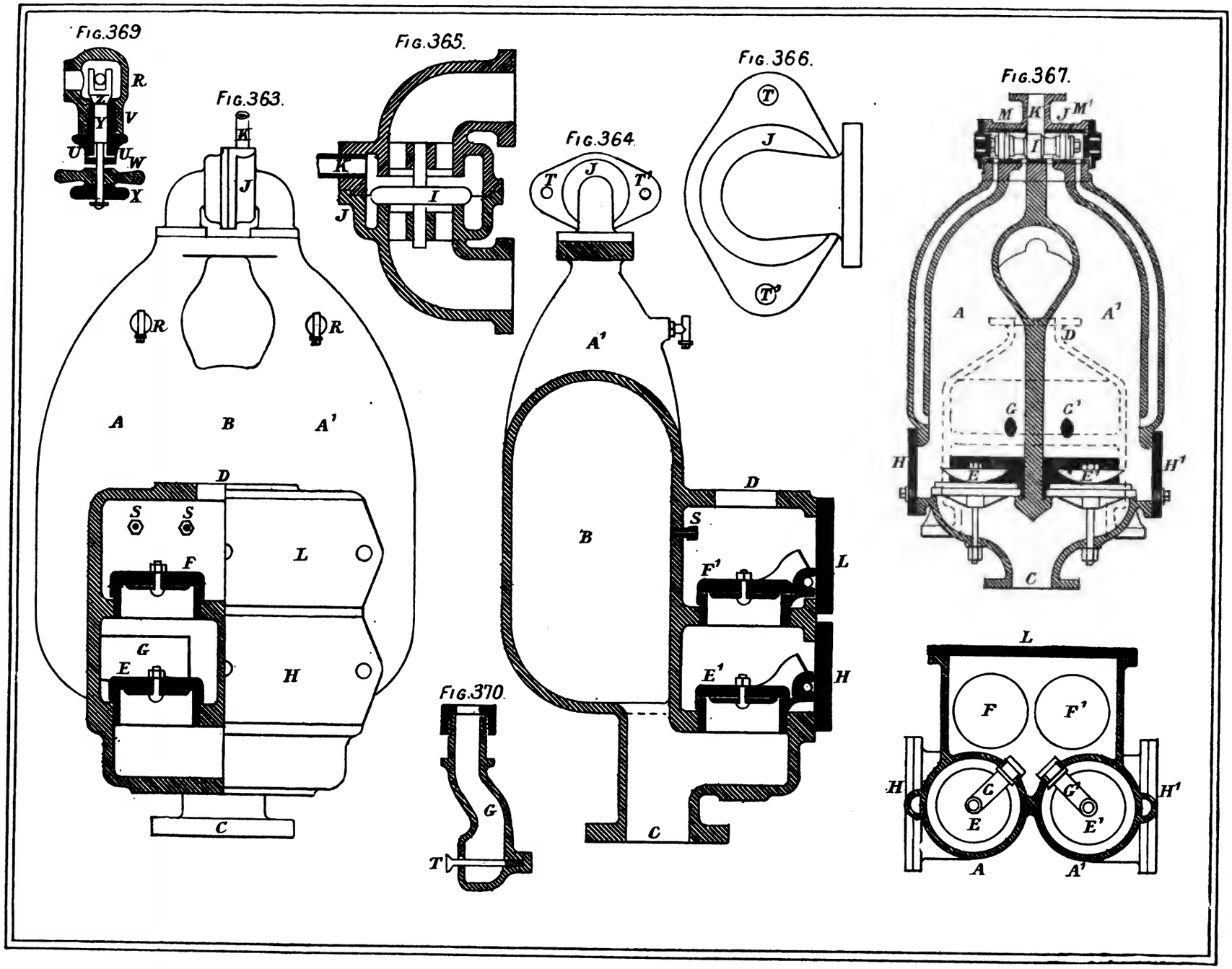
Fig.369
R
V
Y
Z
U
W
X
Fig.363.
K
J
R
R
A
B
A'
D
S
S
F
L
G
E
H
C
Fig.365.
K
I
J
Fig.364
T
J
T'
A'
B
D
S
F'
L
E'
H
C
Fig.370
G
T
Fig.366.
T
J
T'
Fig.367.
M
K
J
M'
I
A
A'
D
G
G'
H
E
E'
H'
C
L
F
F'
H
G
E
G'
E'
H'
A
A'

Plate. CXII.

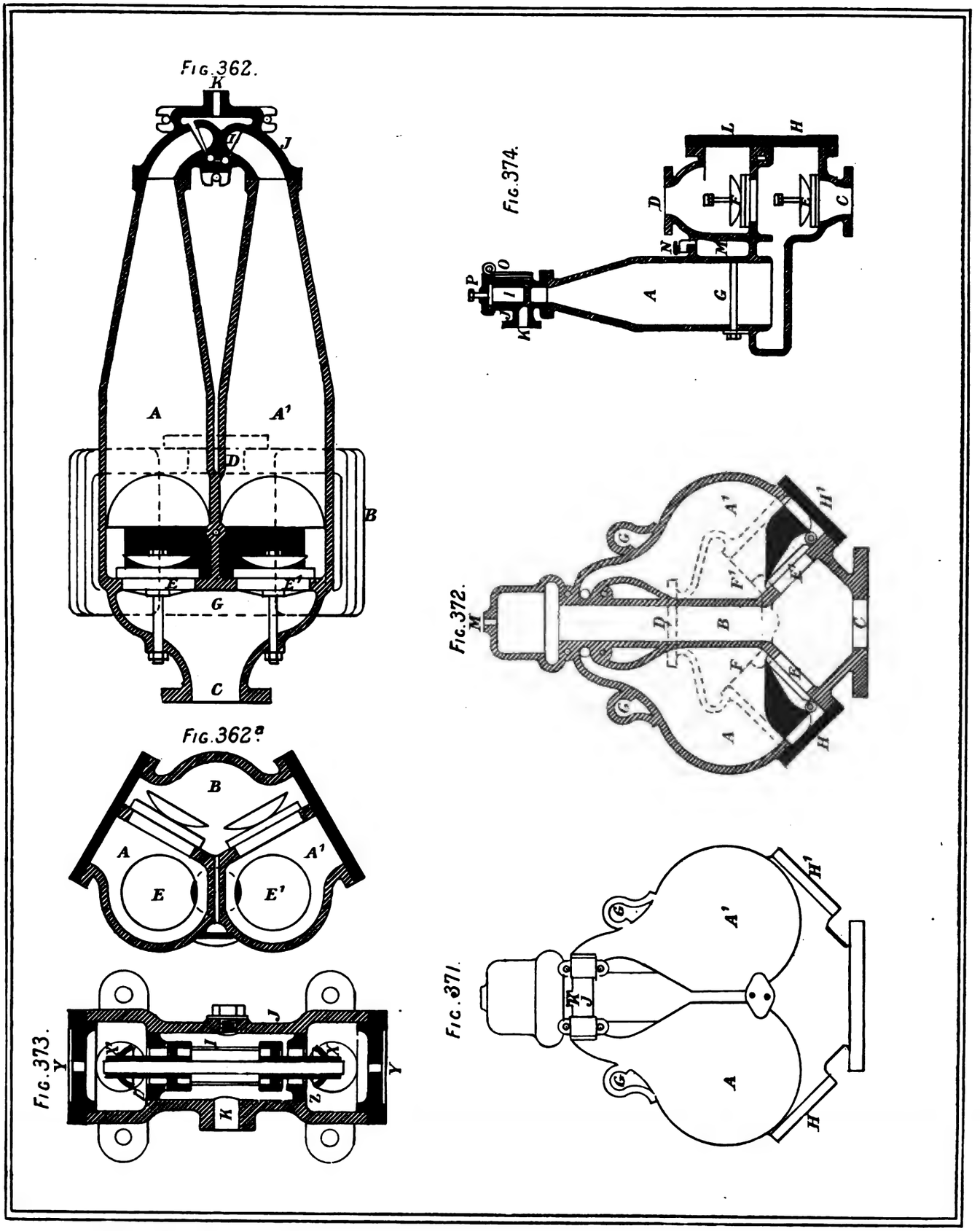
Fig. 362.
Fig. 362a.
Fig. 373.
Fig. 374.
Fig. 372.
Fig. 371.

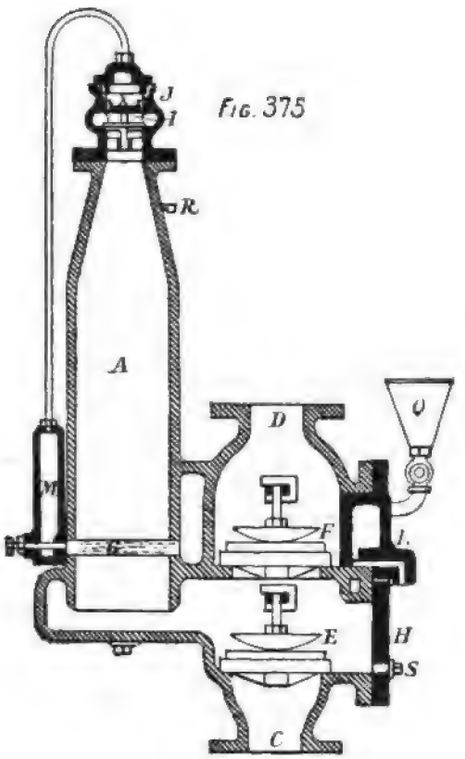

Fig. 375

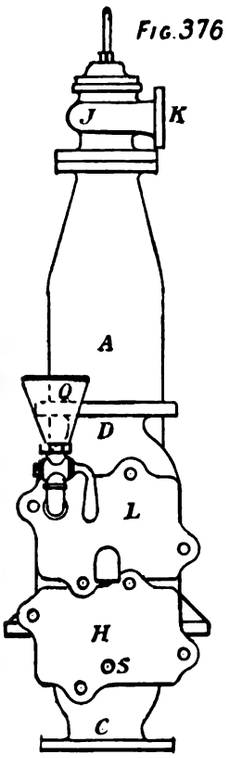

Fig. 376.

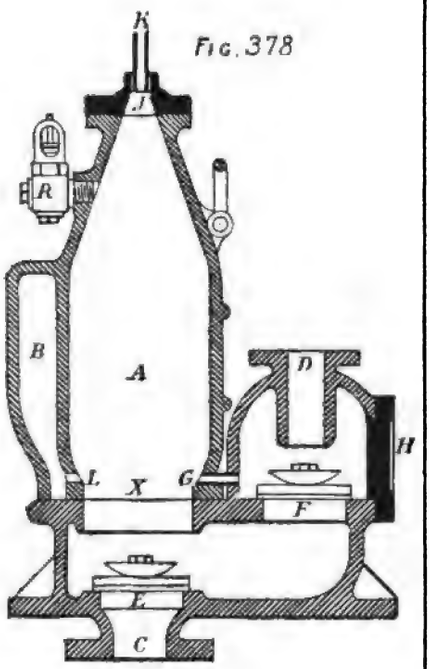

Fig. 378

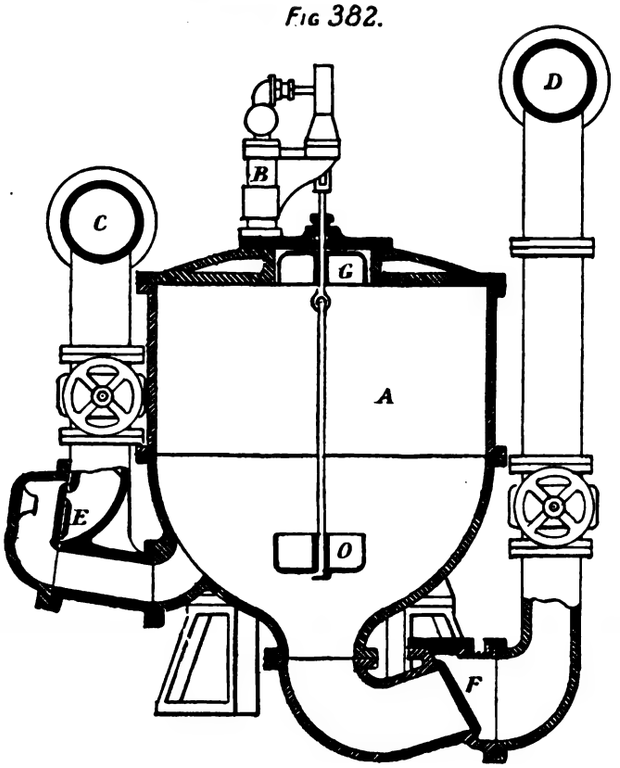

Fig 382.

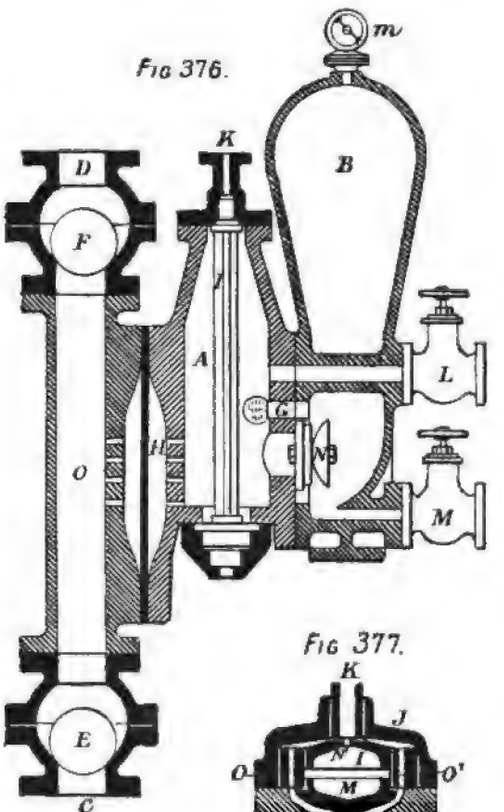

Fig 376.

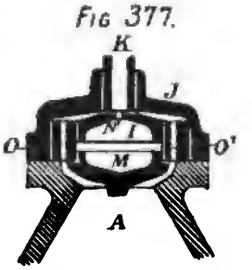

Fig 377.

Fig. 380.

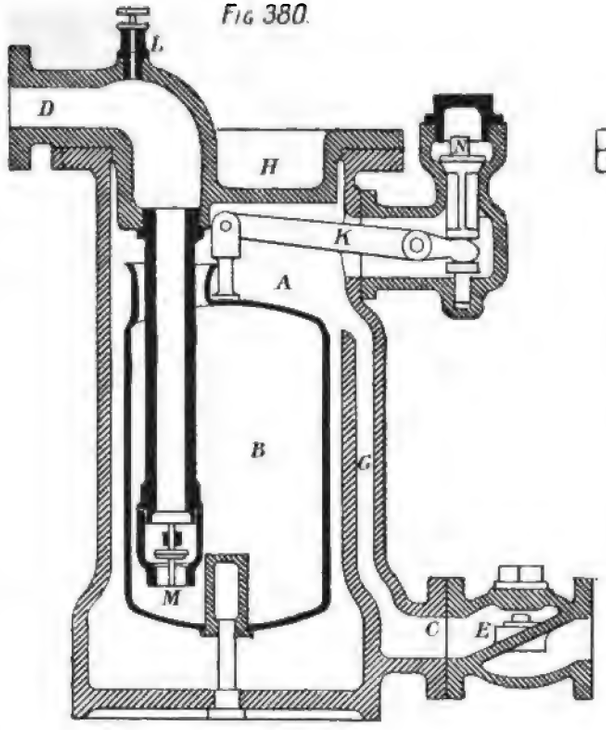

Fig. 381.

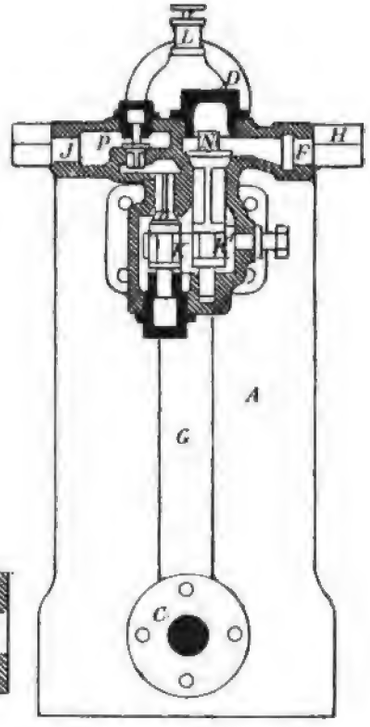

Fig. 384.

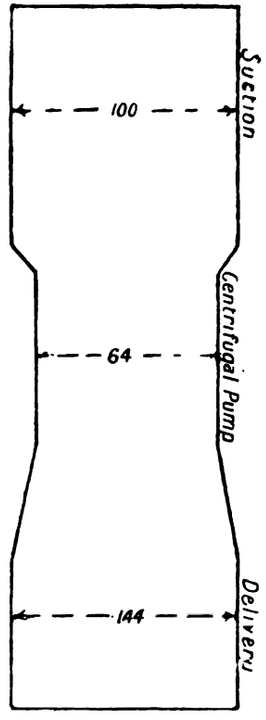

Fig. 383.

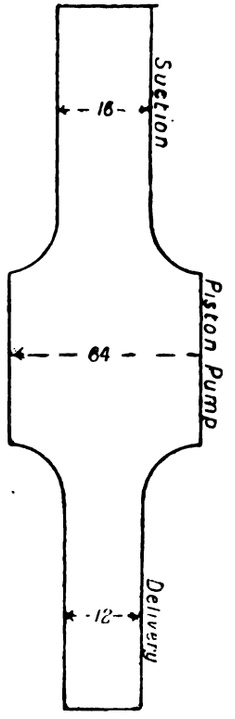

Fig. 387.

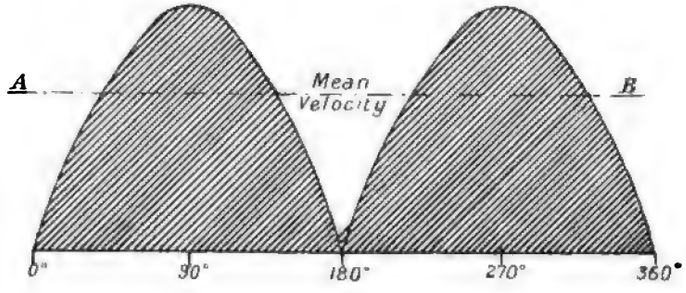

Fig. 388.

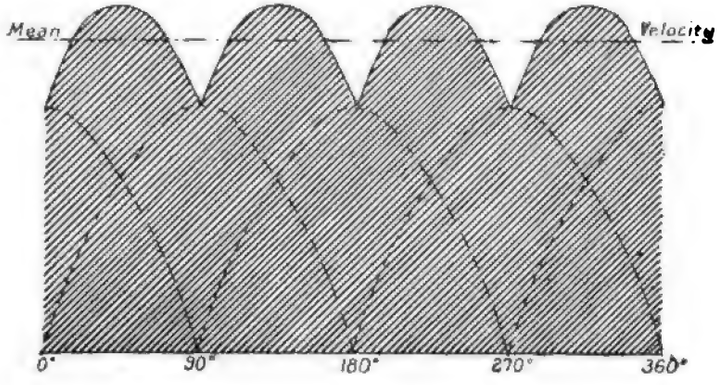

Plate. CXV.

Fig. 386.

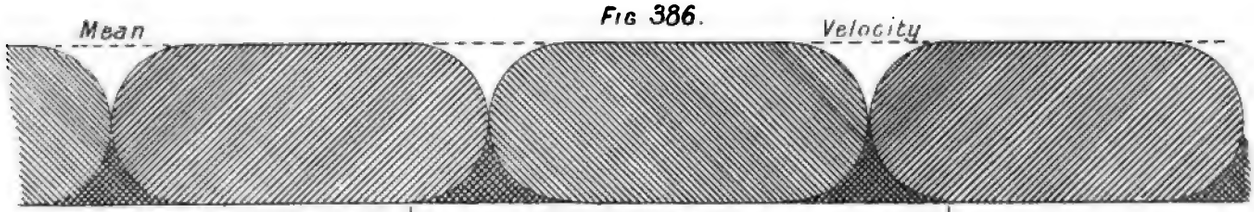

Fig. 385.

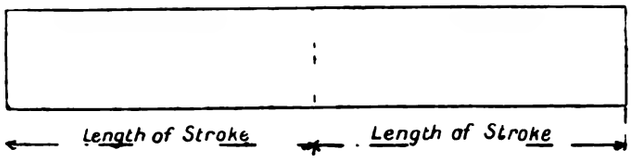

Fig. 396.

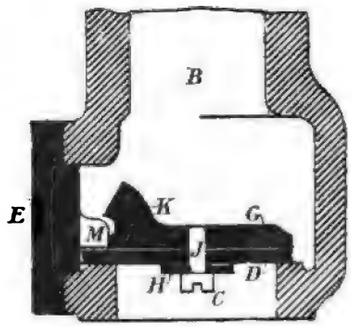

Fig. 390.

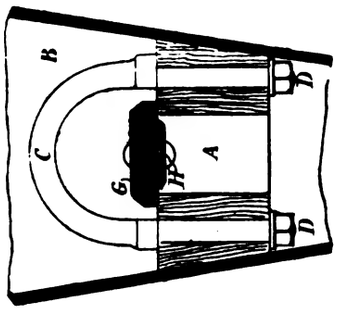

Fig. 391.

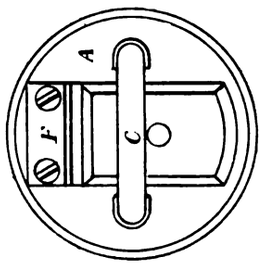

Fig. 397.

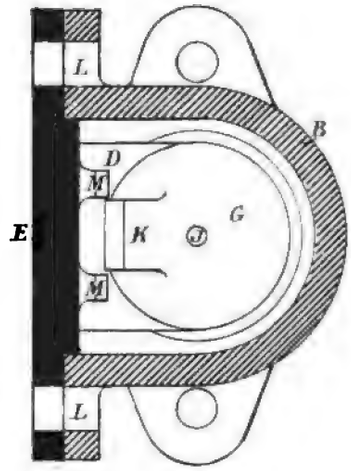

Fig. 392.

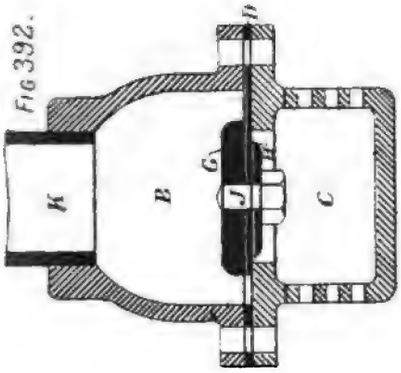

Fig. 393.

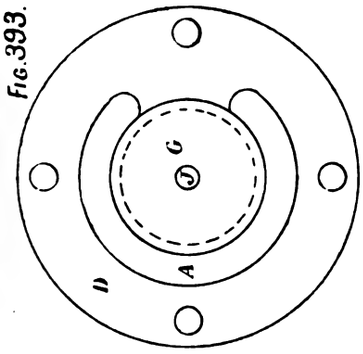

Fig. 394.

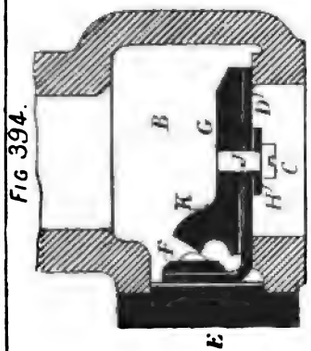

Fig. 395.

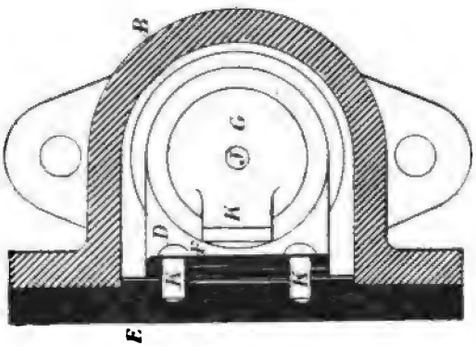

Fig. 389.

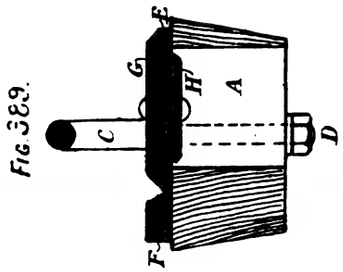

Fig. 400.

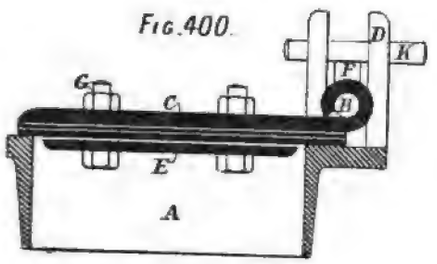

Fig. 398.

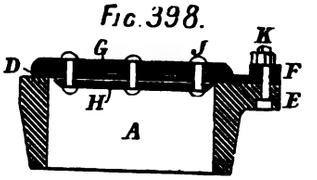

Fig. 402

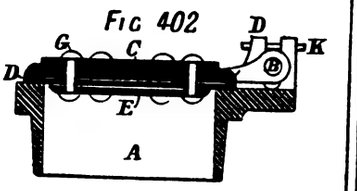

Fig. 399.

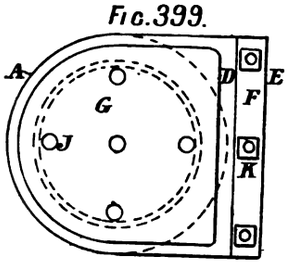

Fig. 403.

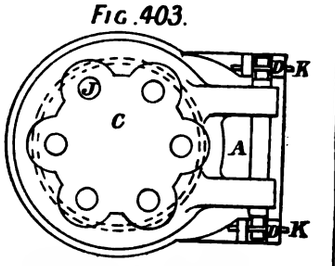

Fig. 401

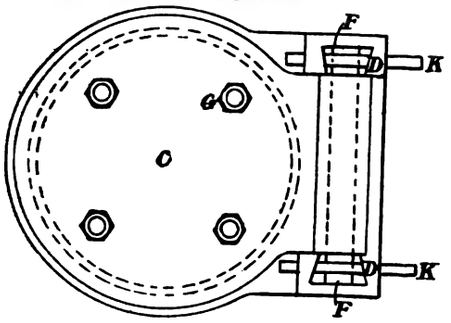

Fig. 408

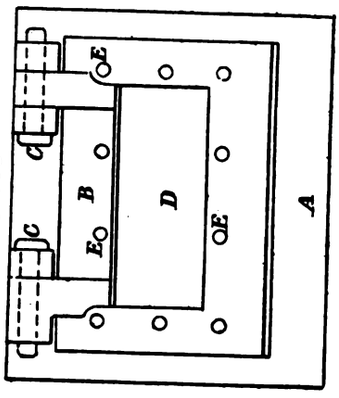

Fig. 410.

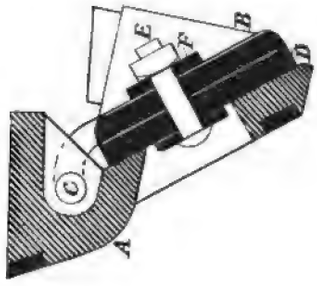

Fig. 404.

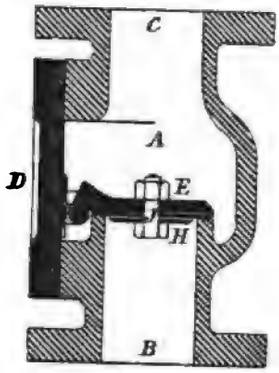

Fig. 407.

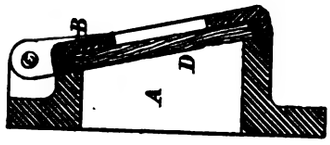

Fig. 405.

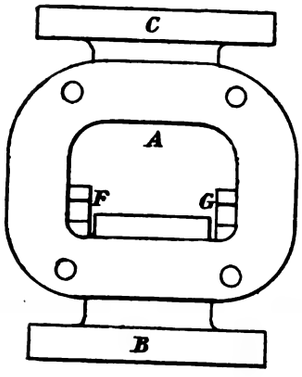

Fig. 406.

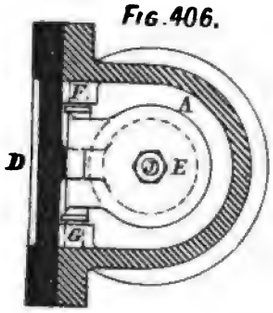

Fig. 409.

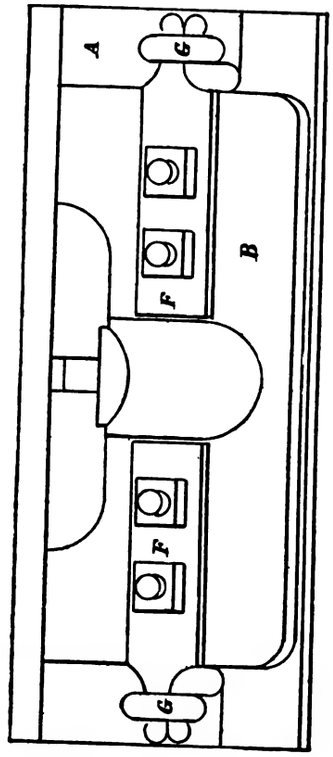

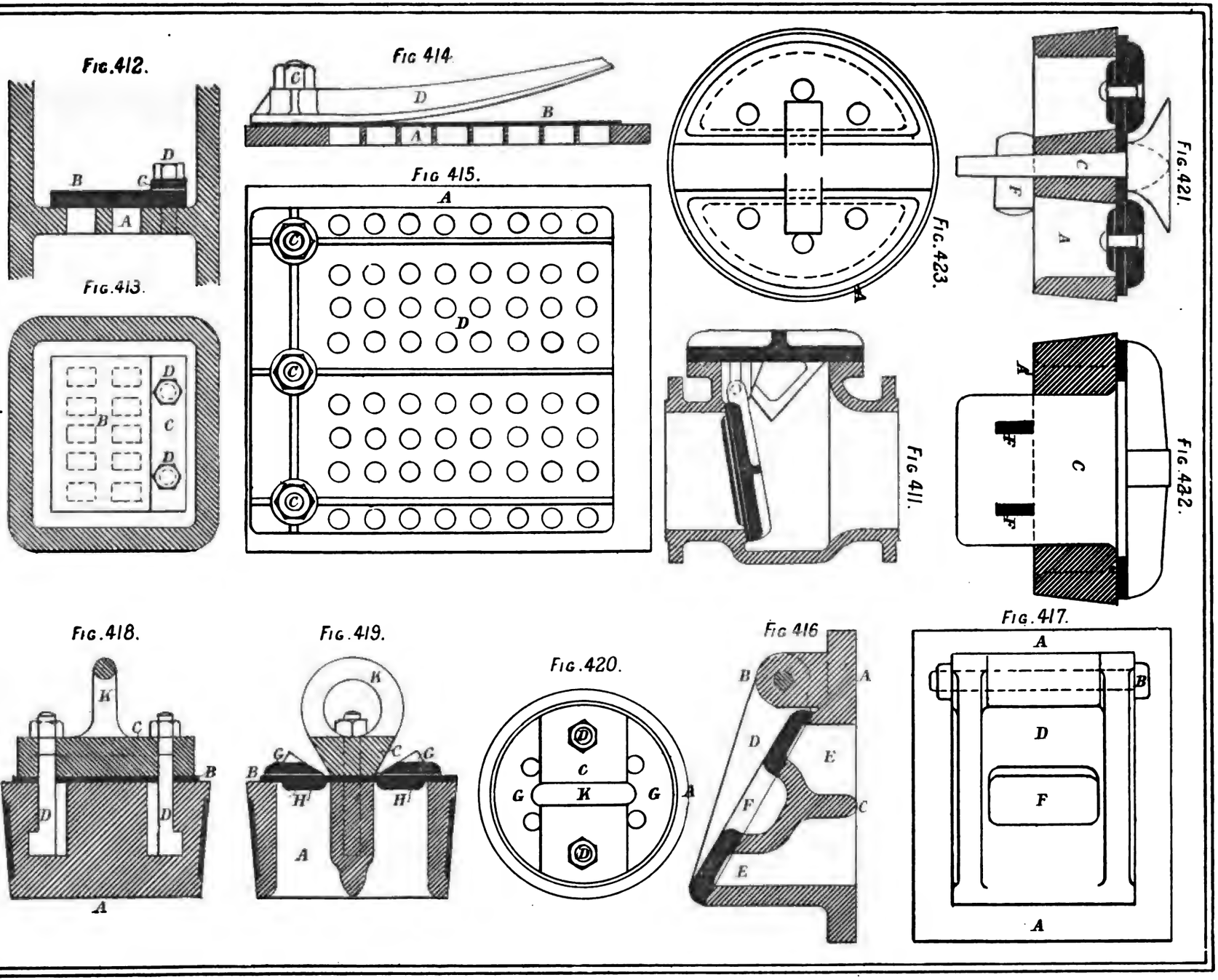

Plate CXVIII

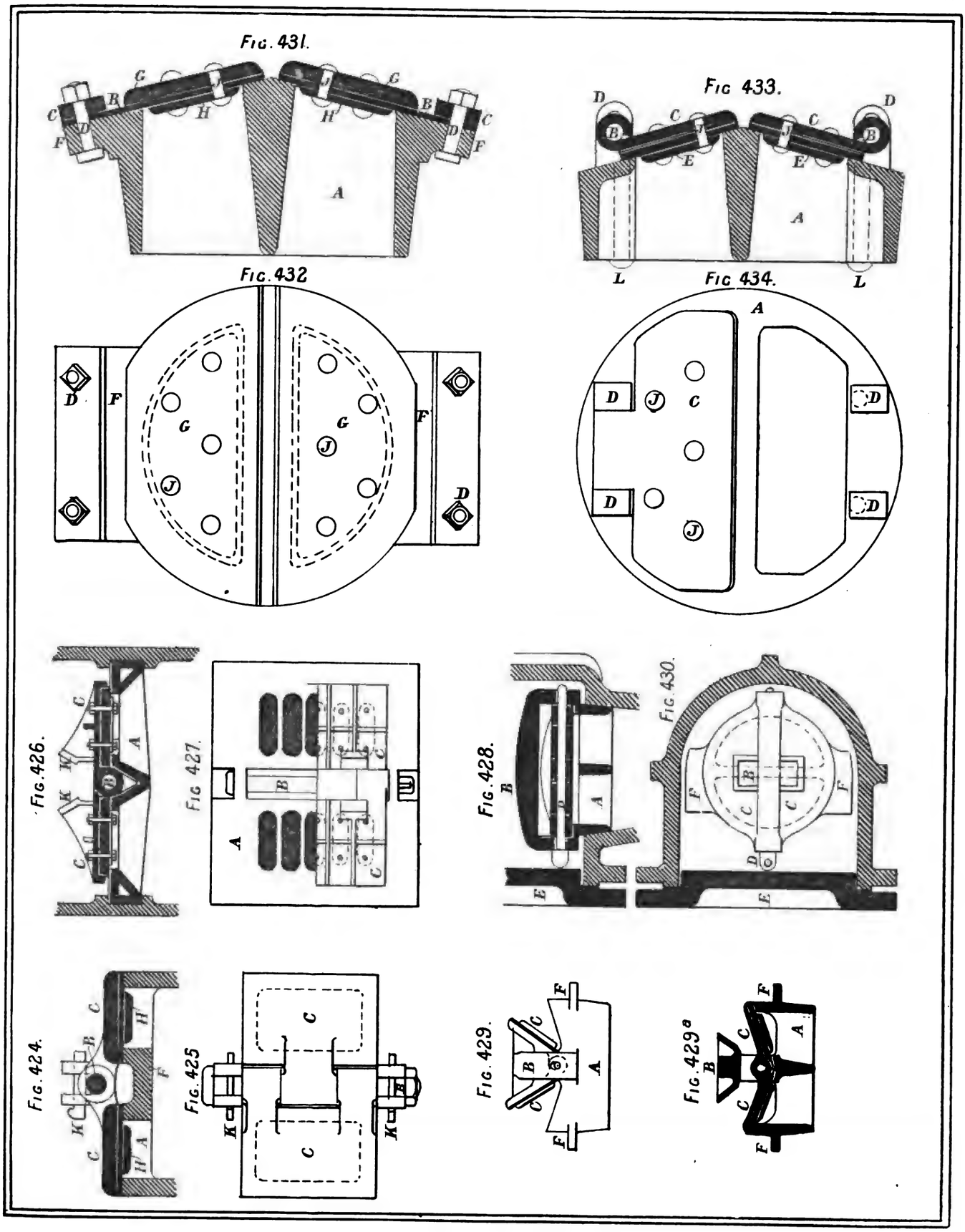
Fig. 431.
Fig 433.
Fig. 432
Fig 434.
Fig. 426.
Fig 427.
Fig. 428.
Fig. 430.
Fig. 424.
Fig. 425
Fig. 429.
Fig. 429a

Fig. 435

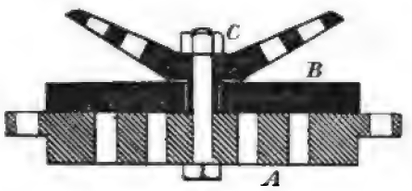

Fig. 436.

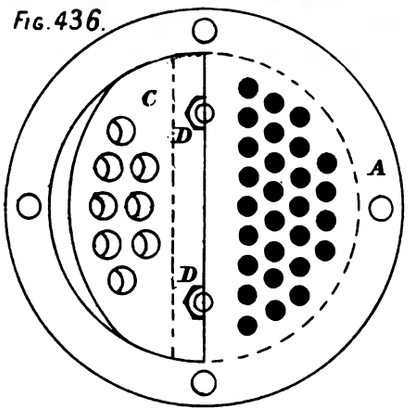

Fig 437

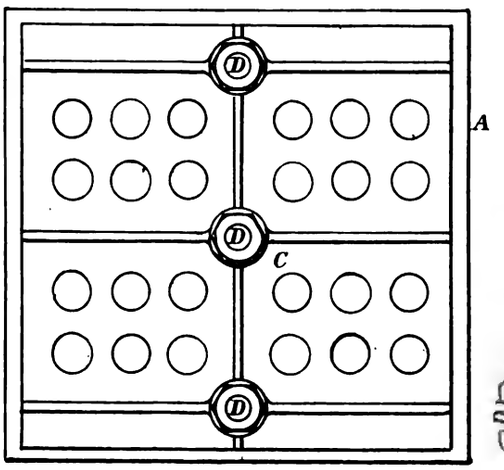

Fig. 438.

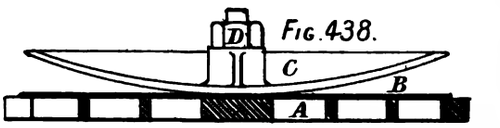

Fig. 439

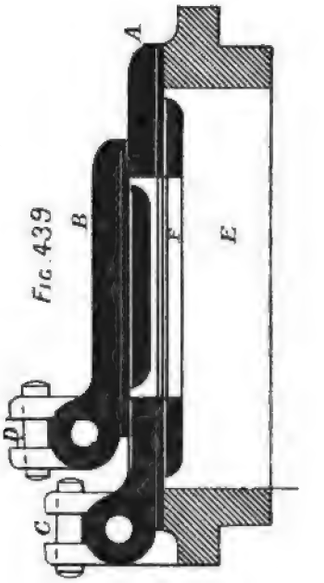

Fig. 440.

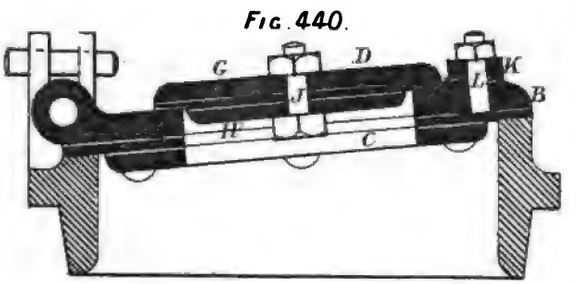

Fig 446

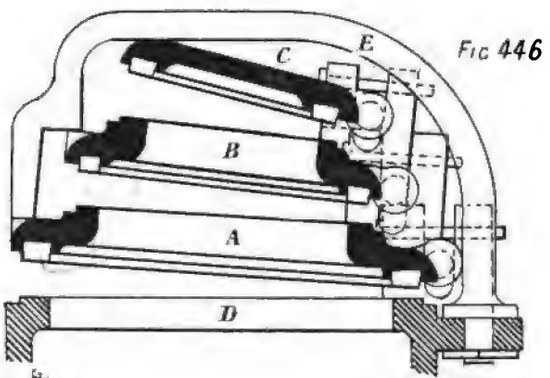

Fig. 441.

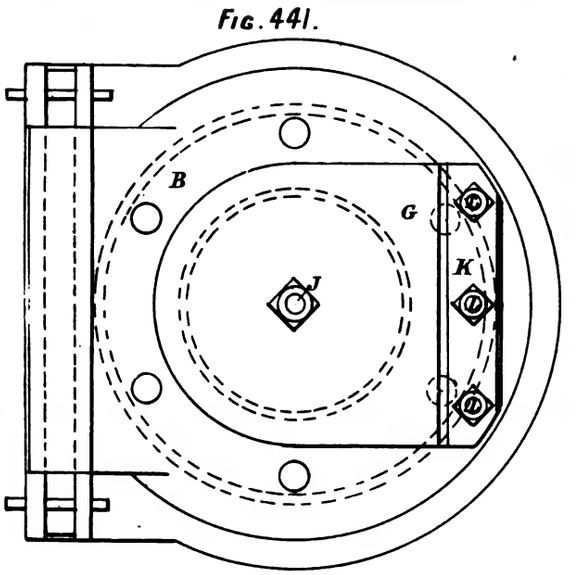

Fig. 442.

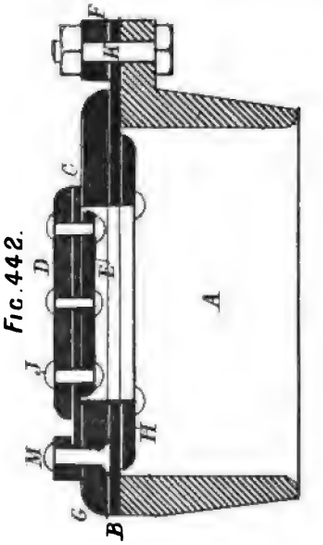

Fig. 443

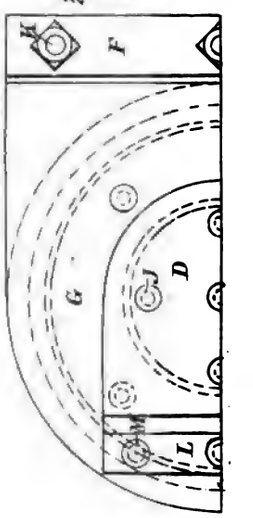

Fig. 447.

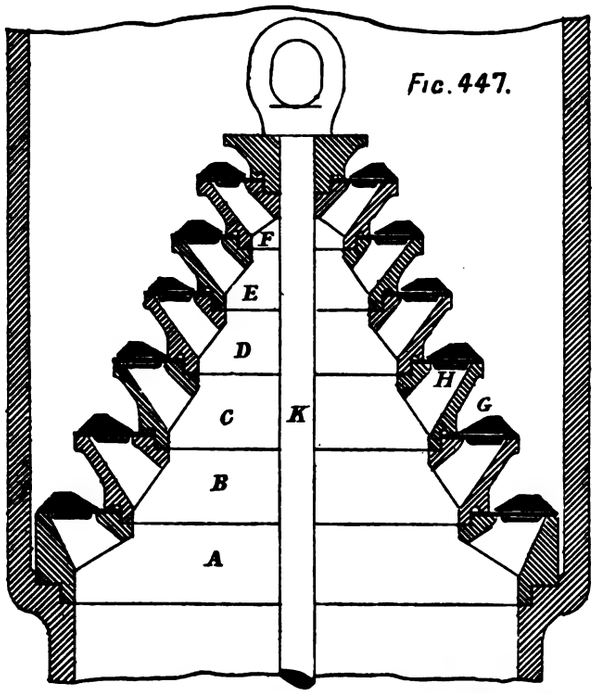

Fig. 450.

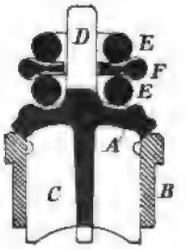

Fig. 444.

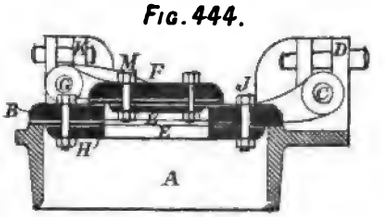

Fig. 445.

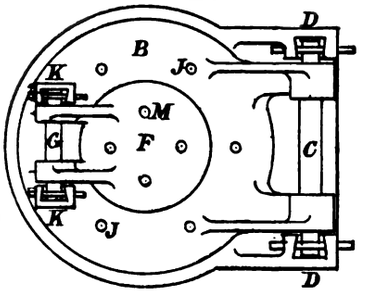

Fig. 449.

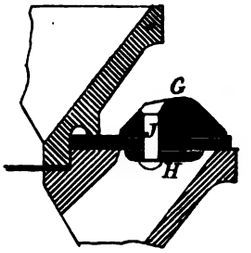

Fig. 448.

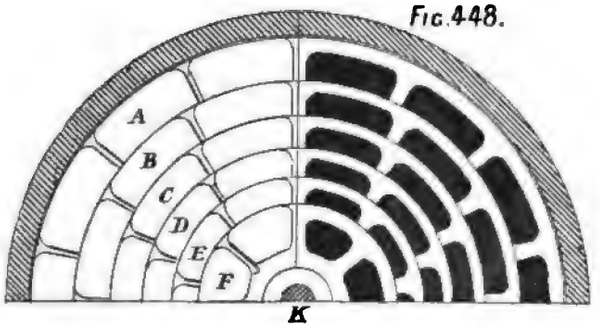

Fig. 452.

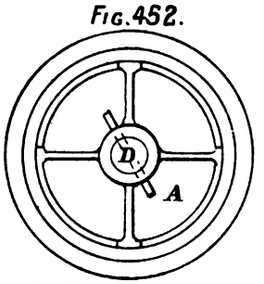

Fig. 451.

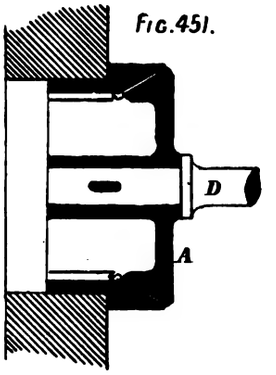

Fig. 462.

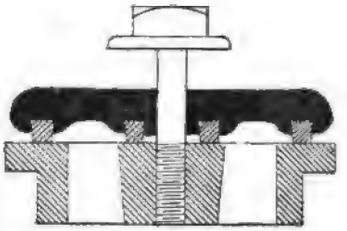

Fig. 461.

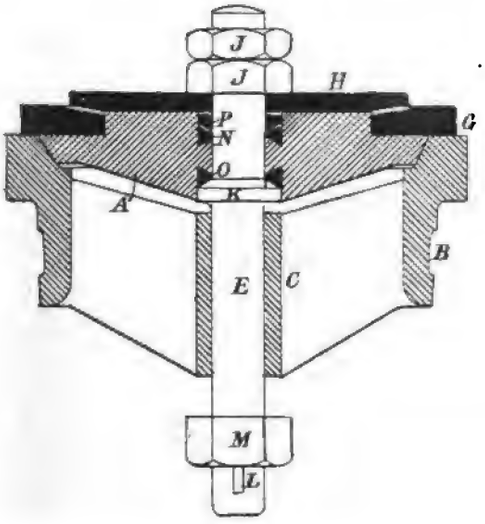

Fig. 453.

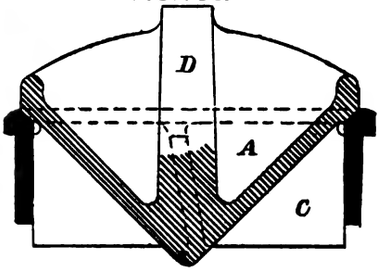

Fig. 463.

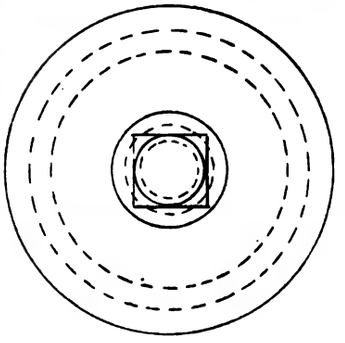

Fig. 454.

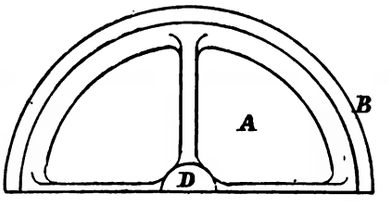

Fig. 459.

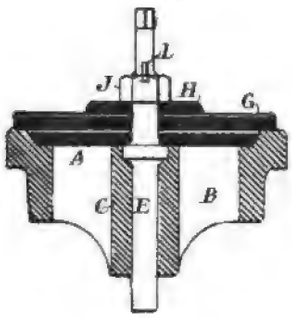

Fig. 460.

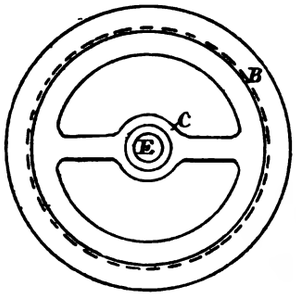

Fig. 464.

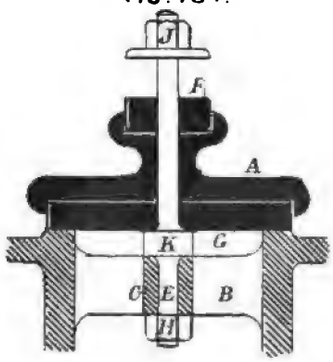

Fig. 465

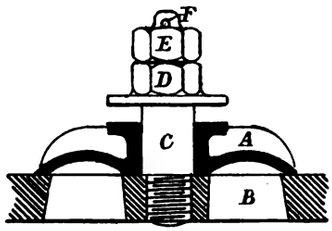

Fig. 466

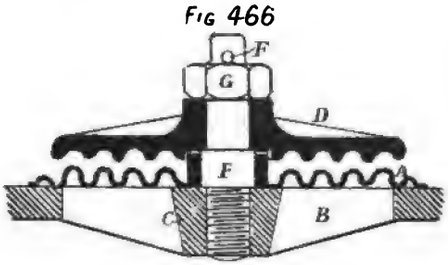

Fig. 467.

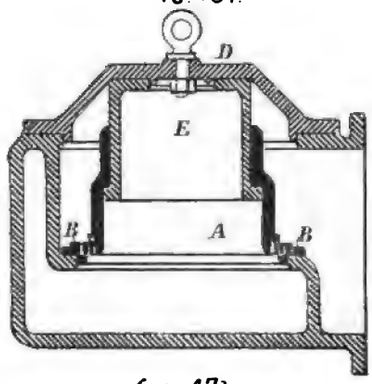

Fig. 469

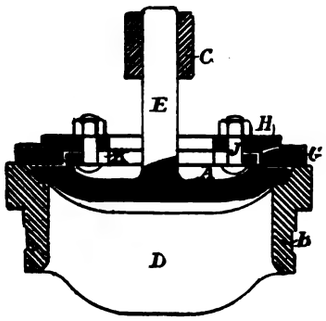

Fig. 468.

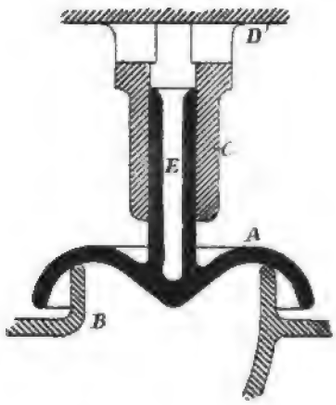

Fig 471

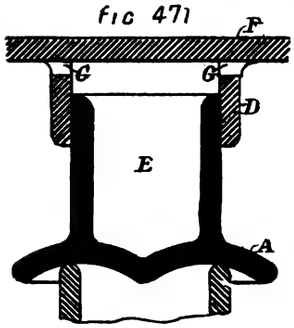

Fig. 470.

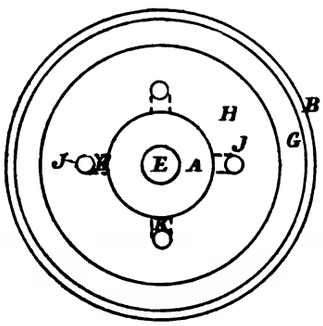

Fig. 472

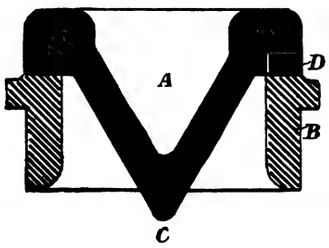

Fig. 474.

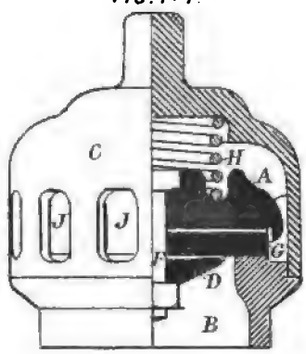

Fig. 475.

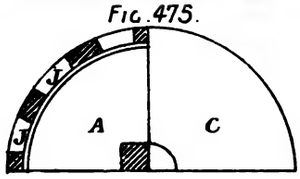

Fig. 455.

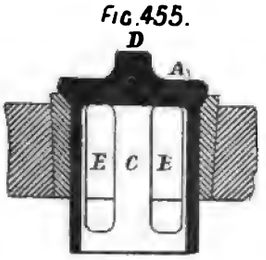

Fig. 457

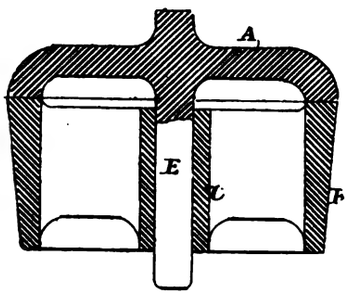

Fig. 477.

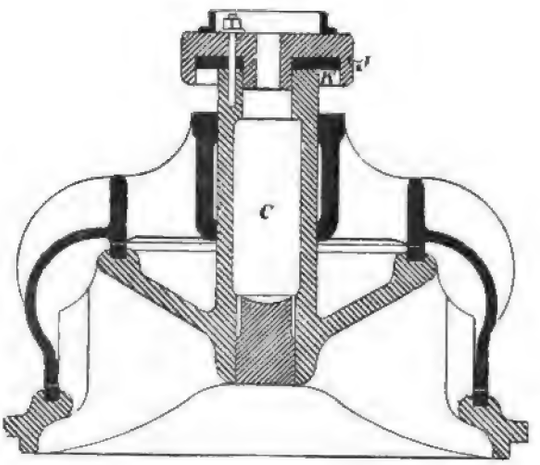

Fig. 456

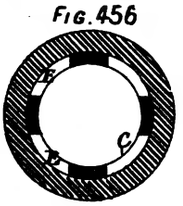

Fig. 458.

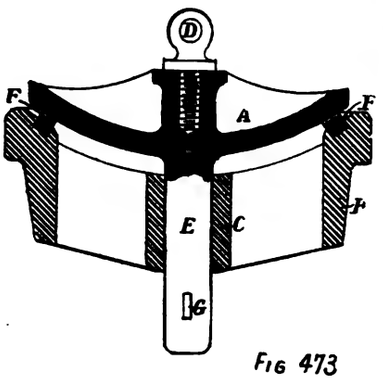

Fig. 481.

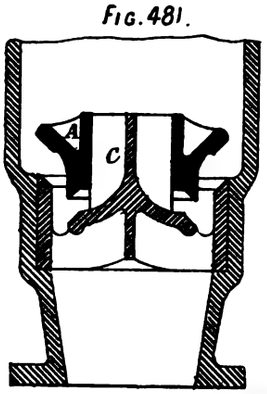

Fig. 478

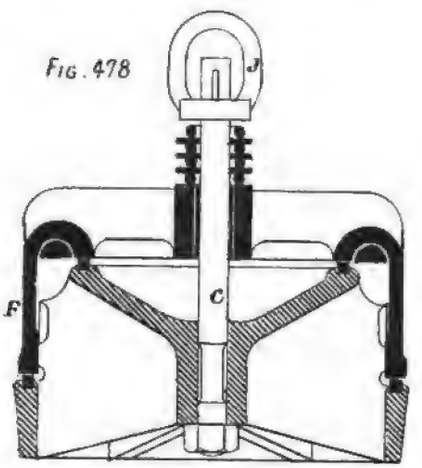

Fig. 473

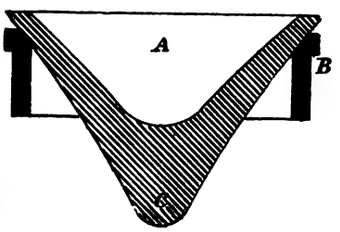

Fig. 483

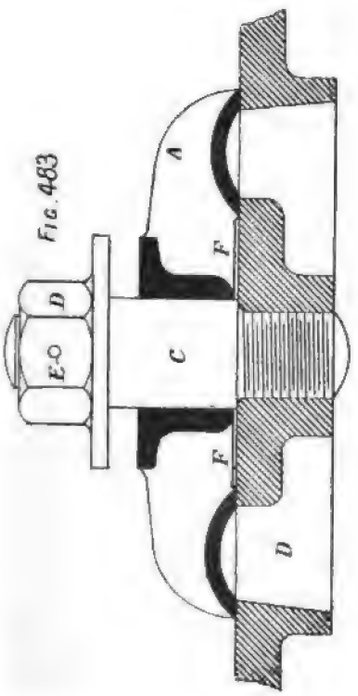

Fig. 476.

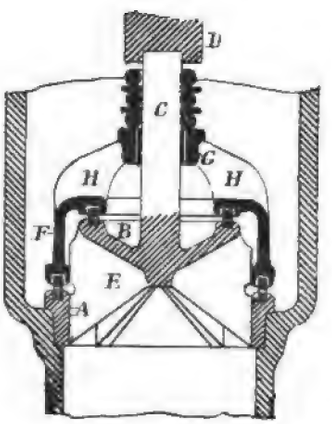

Fig. 482.

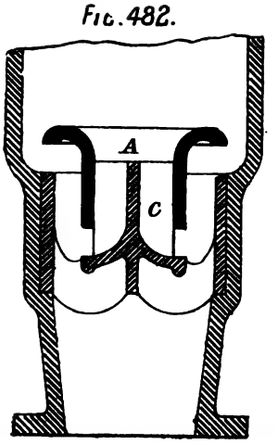

Fig. 479.

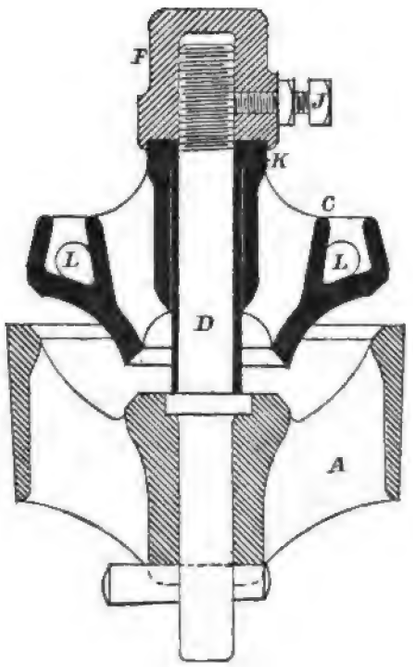

Fig. 484.

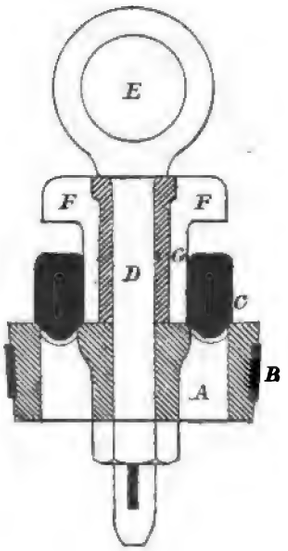

Fig 492.

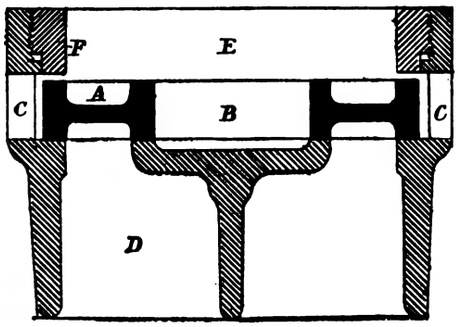

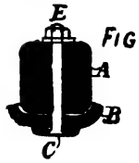

Fig 491

Fig. 489.

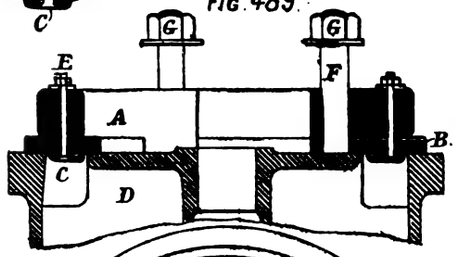

Fig. 485.

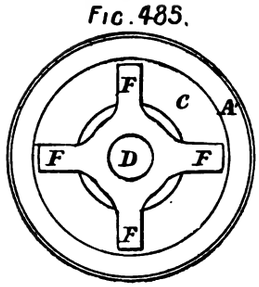

Fig. 480.

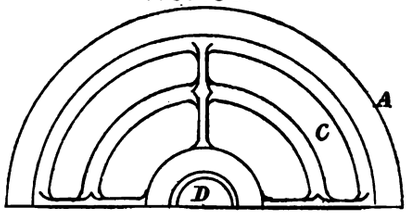

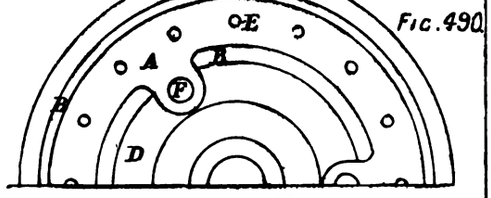

Fig. 490.

Fig. 486.

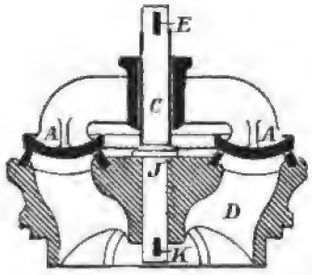

Fig. 487.

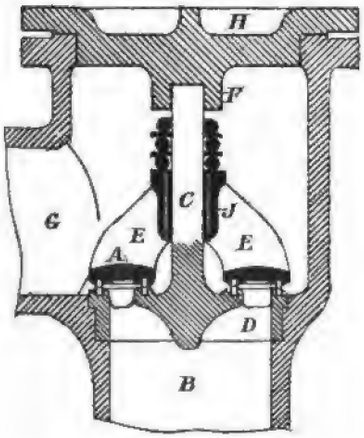

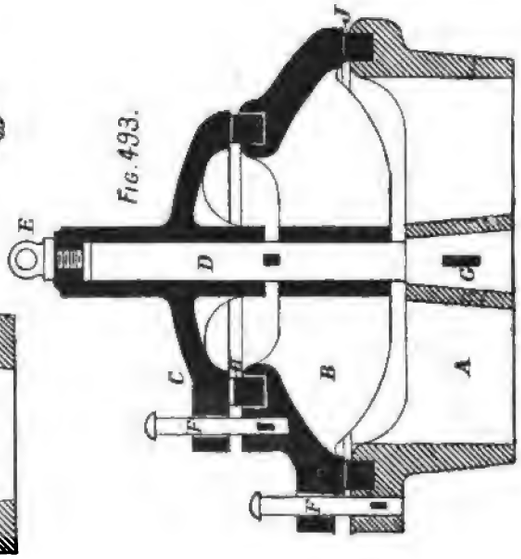

Fig. 493.

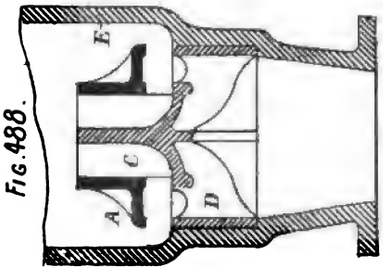

Fig. 488.

Fig. 494.

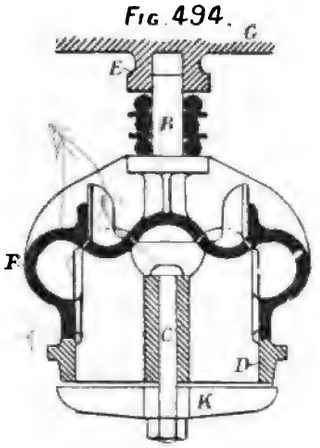

Fig. 495.

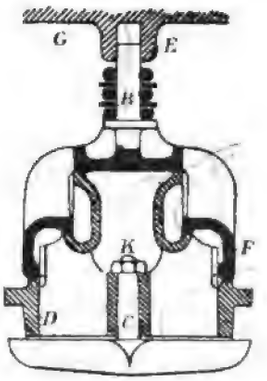

Fig. 496.

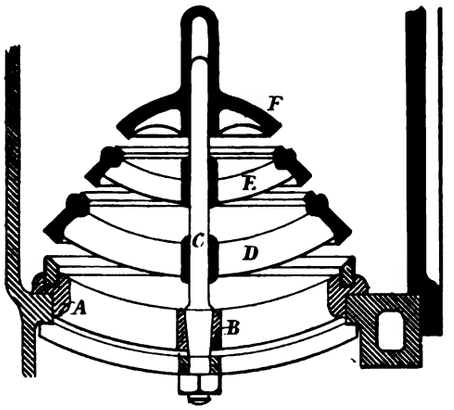

Fig. 501.

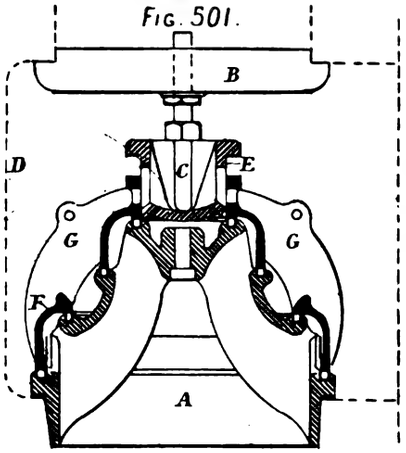

Fig. 497.

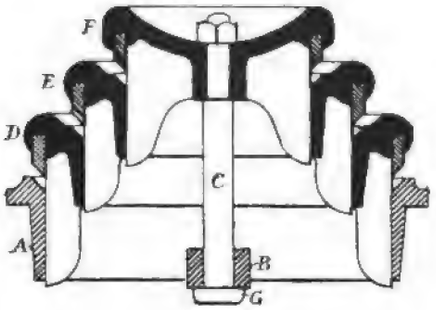

Fig. 500.

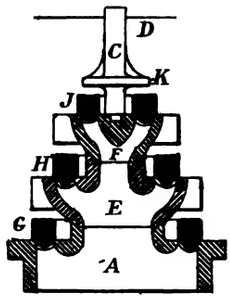

Fig. 518.

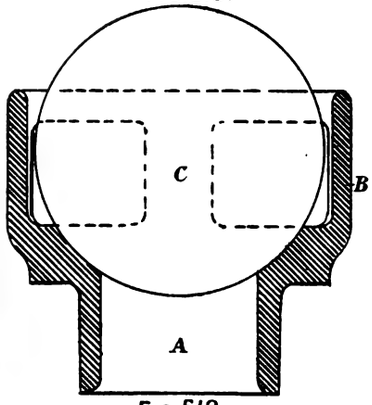

Fig. 502.

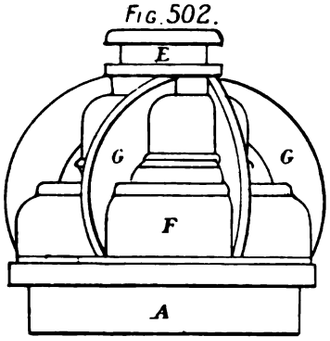

Fig. 498.

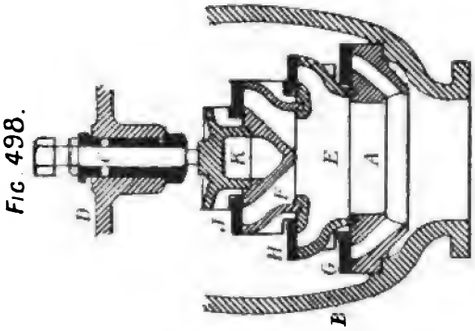

Fig. 503.

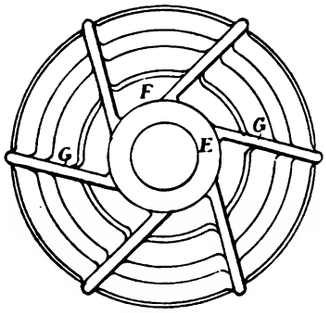

Fig. 499.

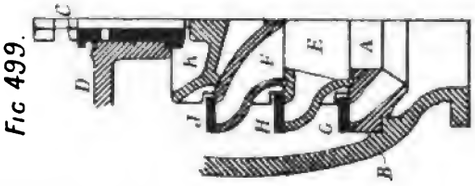

Fig. 519.

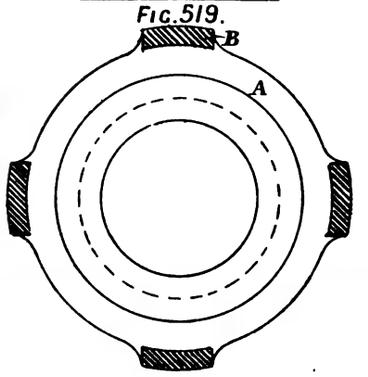

Fig.504.

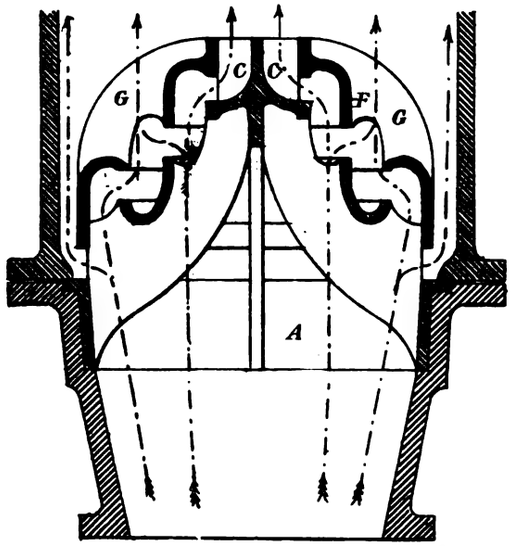

Fig.520

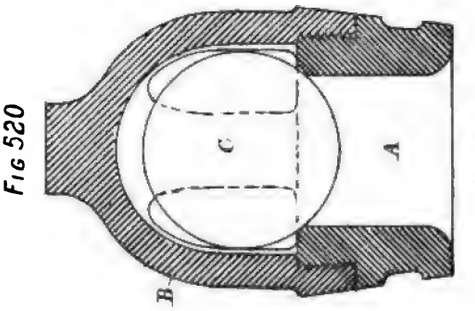

Fig.521.

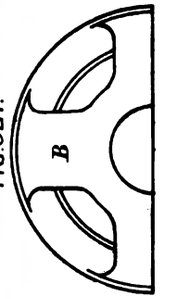

Fig.506.

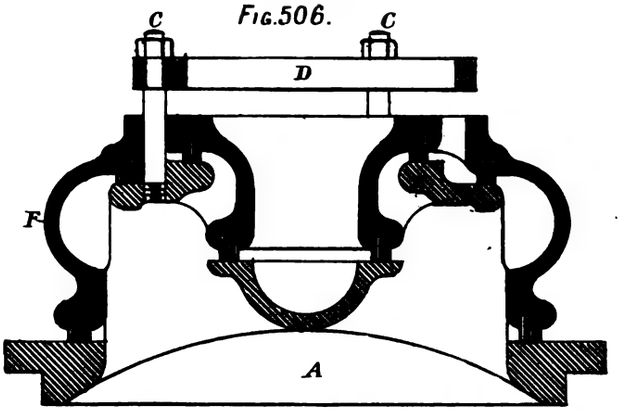

Fig.511.

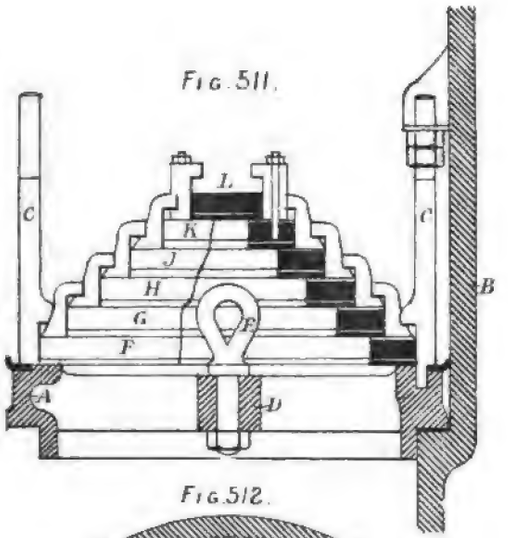

Fig.505.

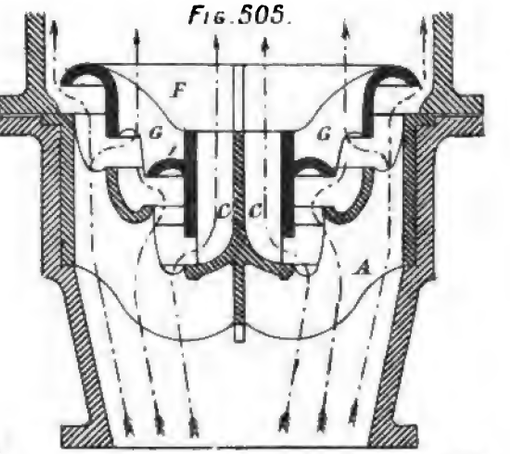

Fig.512.

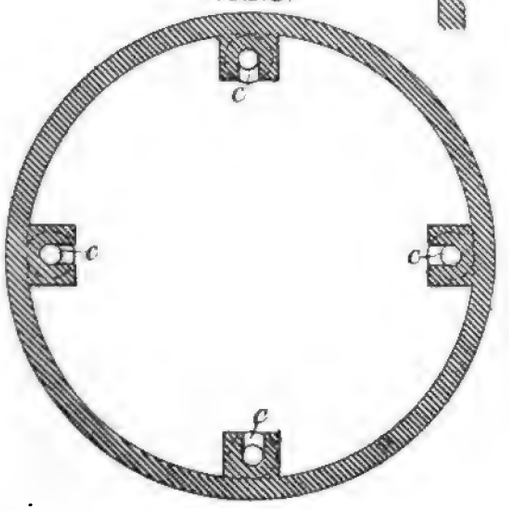

Fig.513.

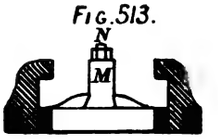

Fig.514.

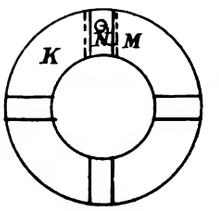

Fig.507.

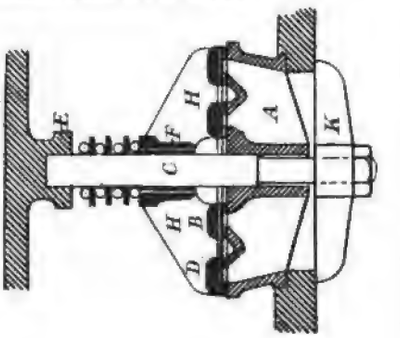

Fig. 509.

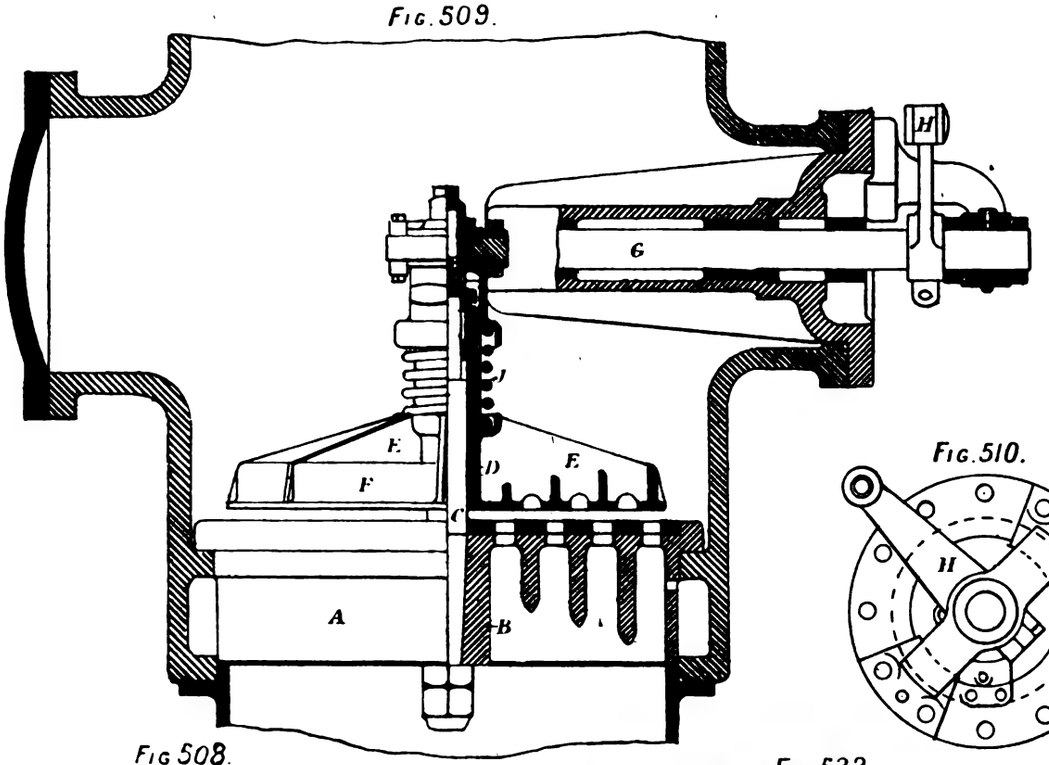

Fig. 510.

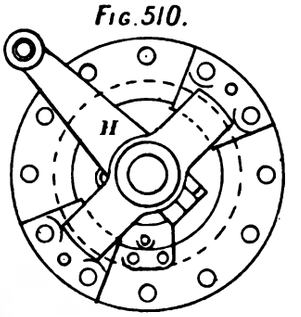

Fig 508.

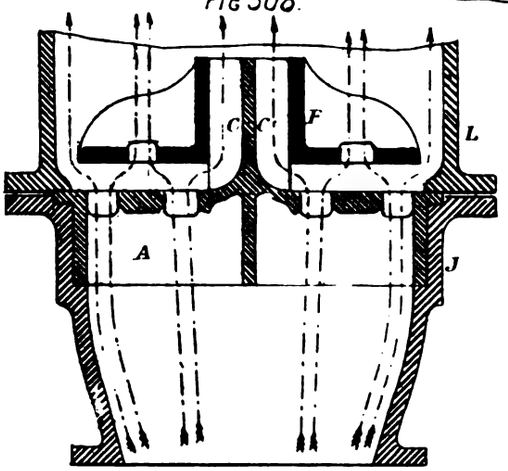

Fig. 522.

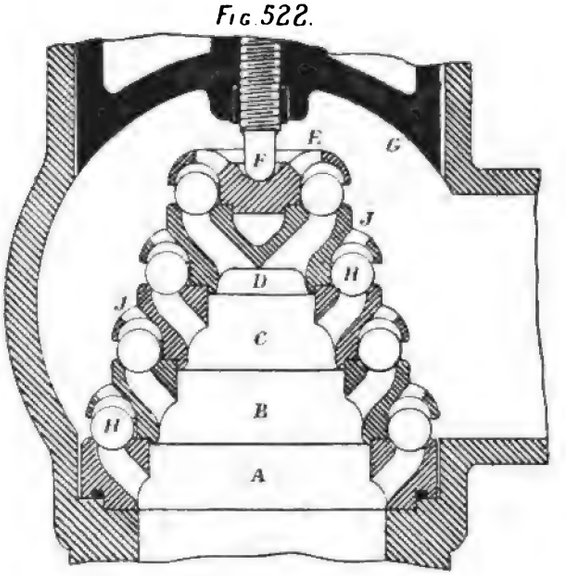

Fig. 524.

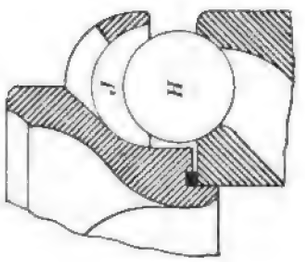

Fig. 523.

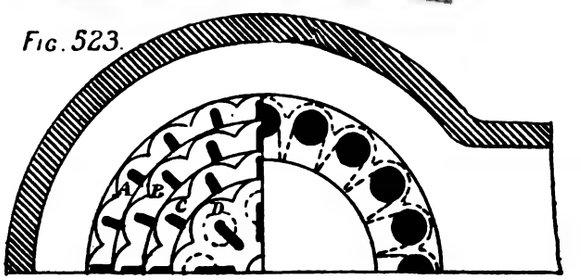

Plate. CXXVIII.

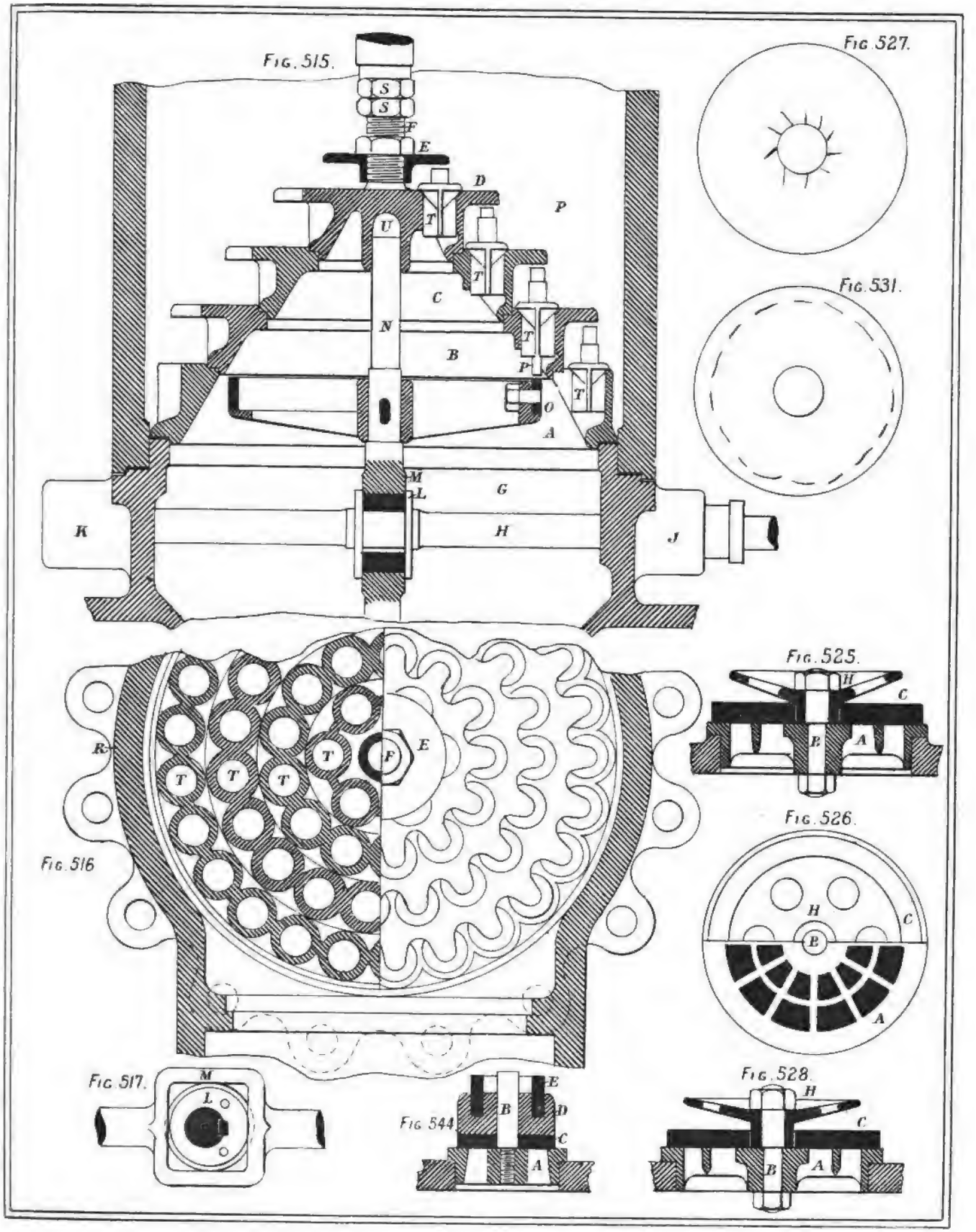

FIG. 529.

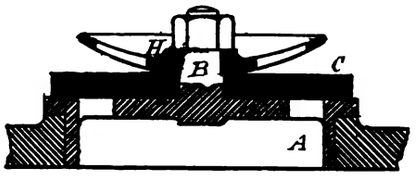

FIG. 532.

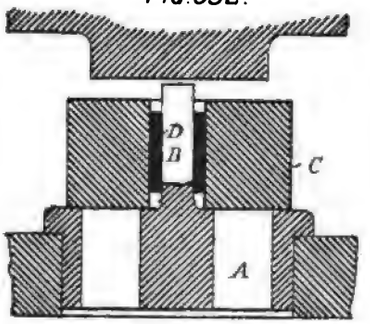

FIG. 534

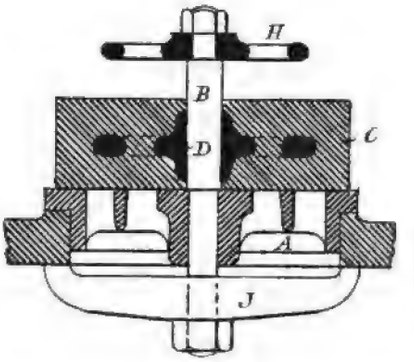

FIG. 535

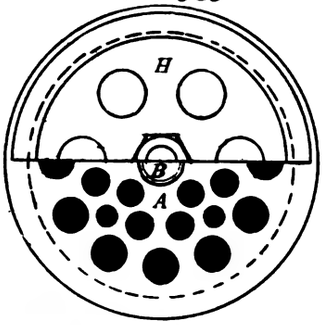

FIG. 533.

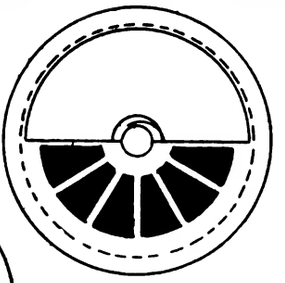

FIG. 535.

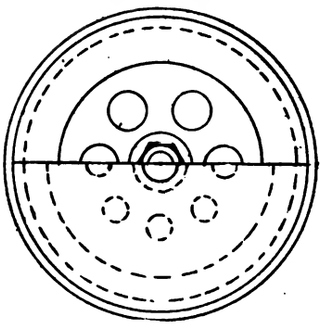

FIG. 536.

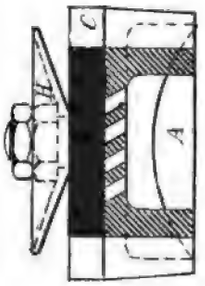

FIG. 537.

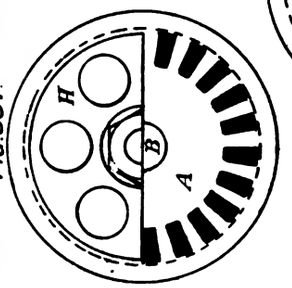

FIG 538.

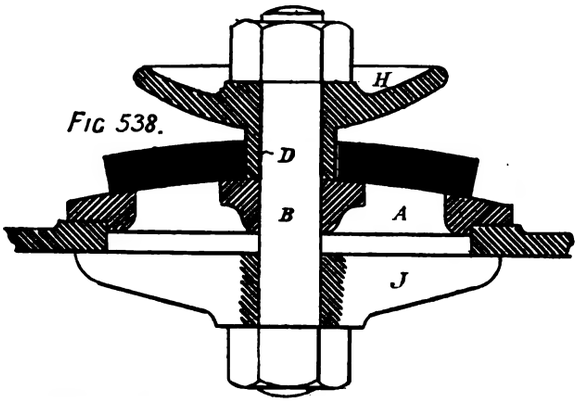

FIG. 539.

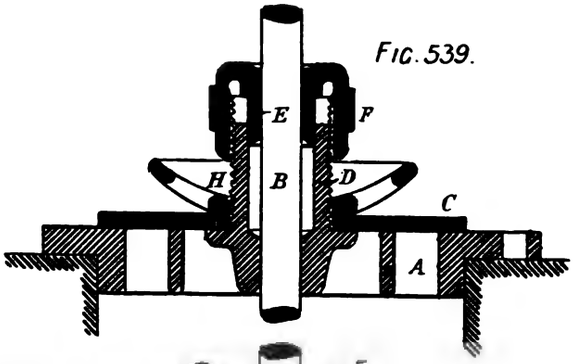

FIG. 542.

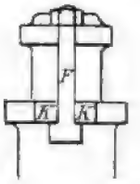

FIG 540

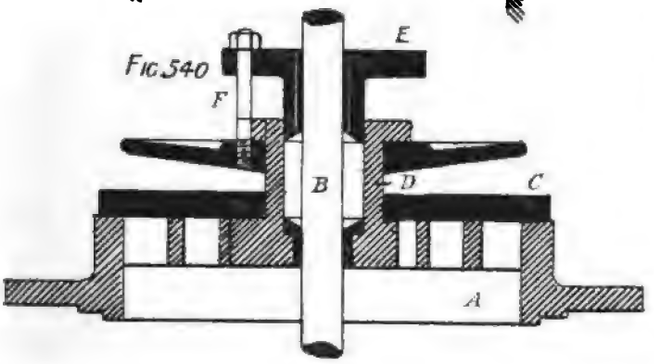

FIG 541.

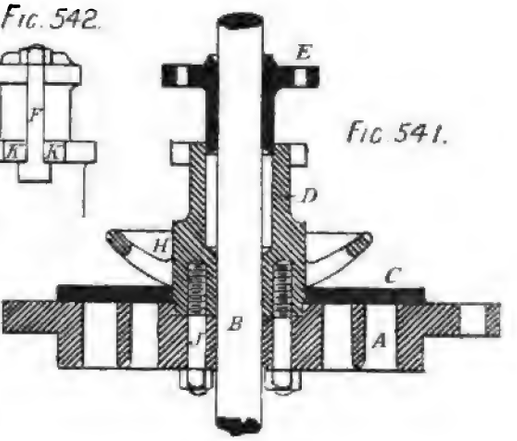

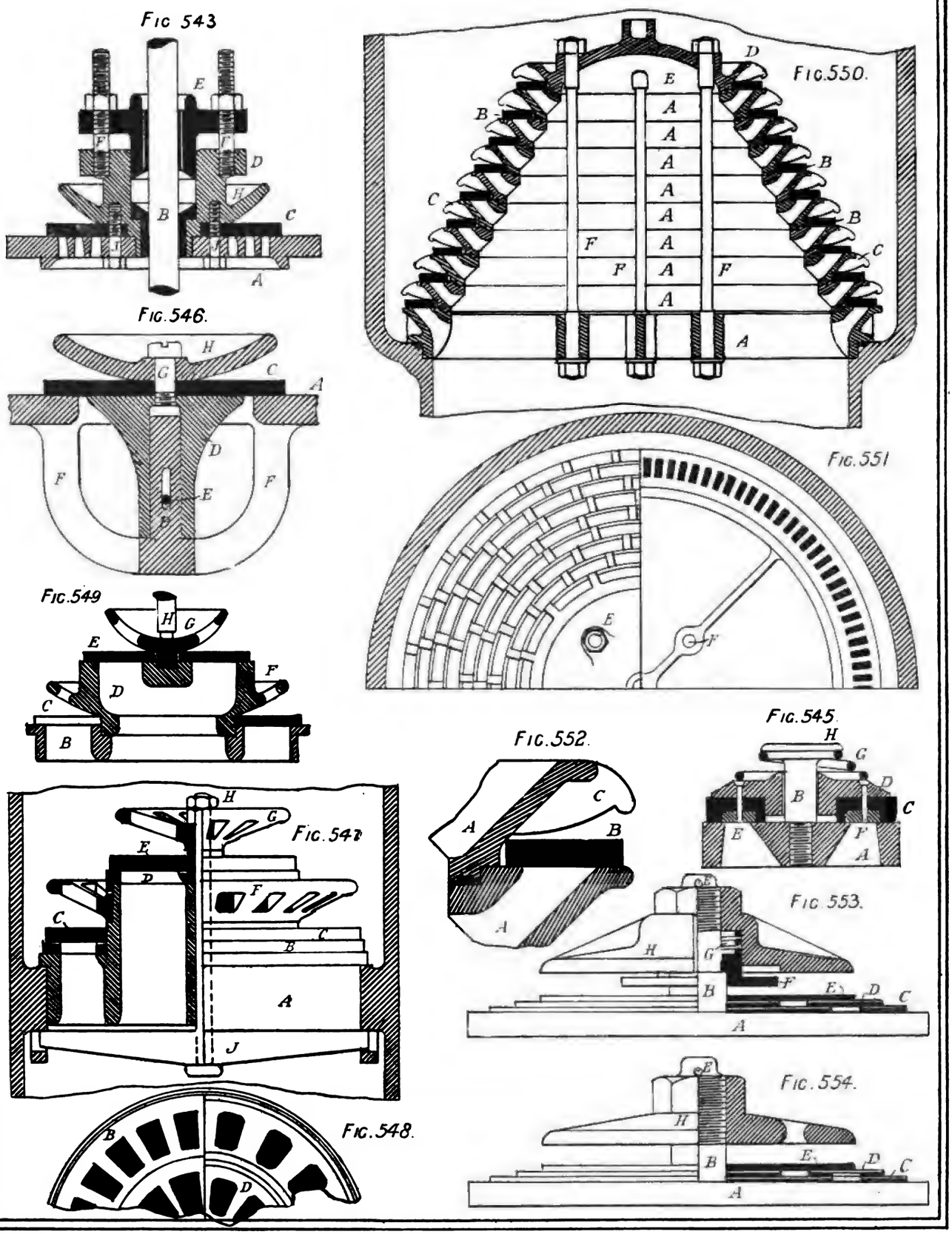
FIG 543
E
F
F
D
H
B
C
A
FIG.546.
H
G
C
A
D
F
F
E
B
FIG.549
H
G
E
F
D
C
B
FIG.547
H
G
E
D
F
C
C
B
A
J
FIG.548.
B
D
FIG.550.
D
E
B
A
A
A
A
A
A
A
B
B
C
C
F
F
F
A
FIG.551
E
F
FIG.552.
C
A
B
A
FIG.545.
H
G
D
B
C
E
F
A
FIG.553.
E
H
G
F
B
E
D
C
A
FIG.554.
E
H
B
E
D
C
A

FIG. 555.

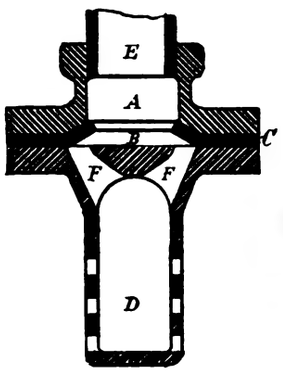

FIG. 557

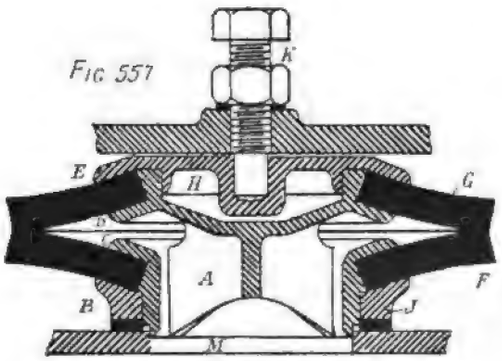

FIG. 561.

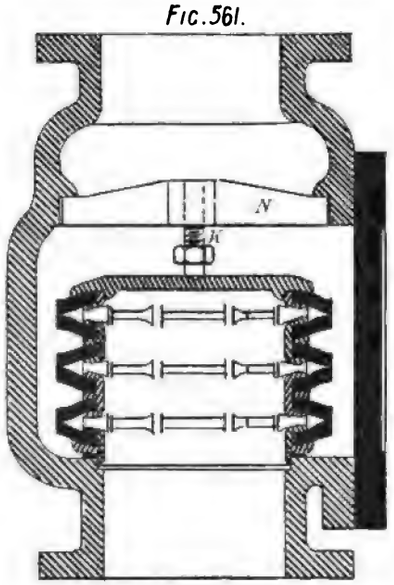

FIG. 556.

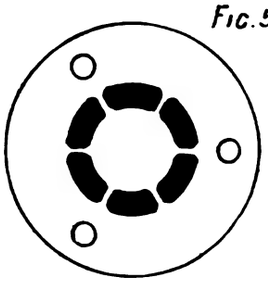

FIG 558

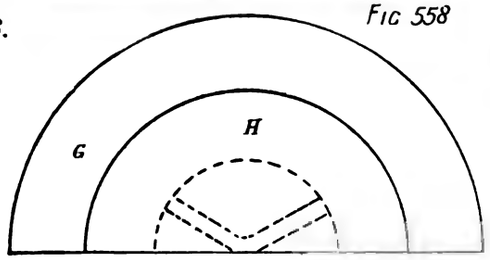

FIG. 562.

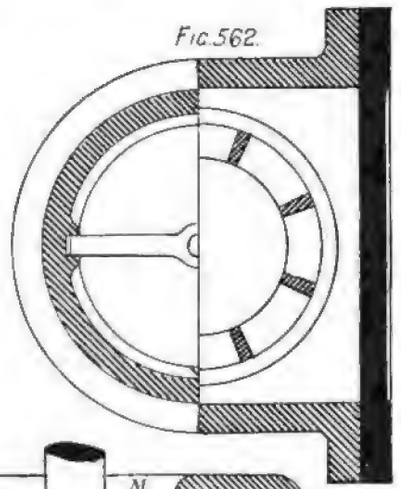

FIG. 559.

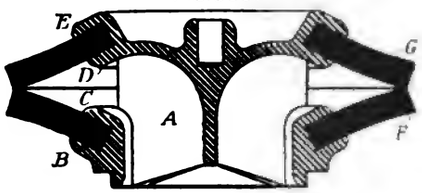

FIG. 565

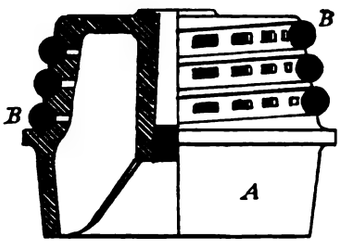

FIG 563.

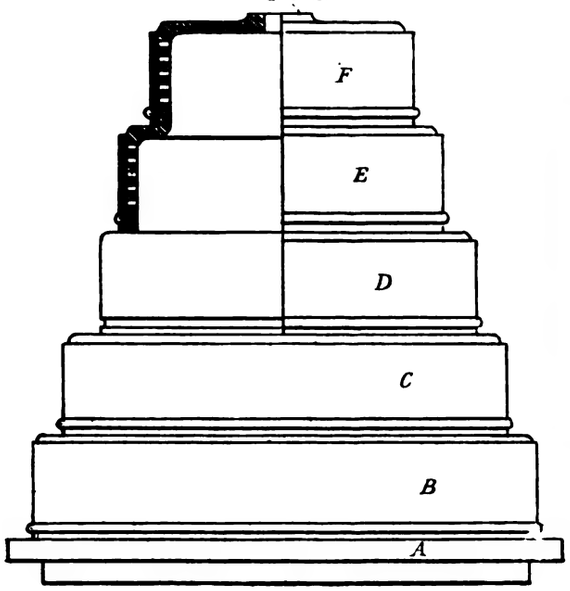

FIG 560.

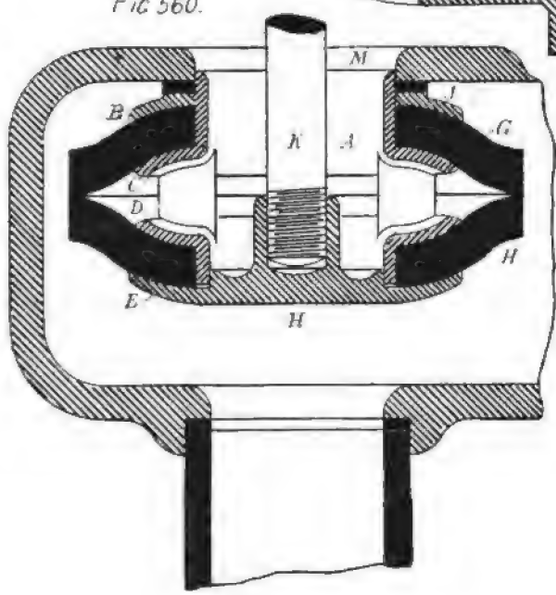

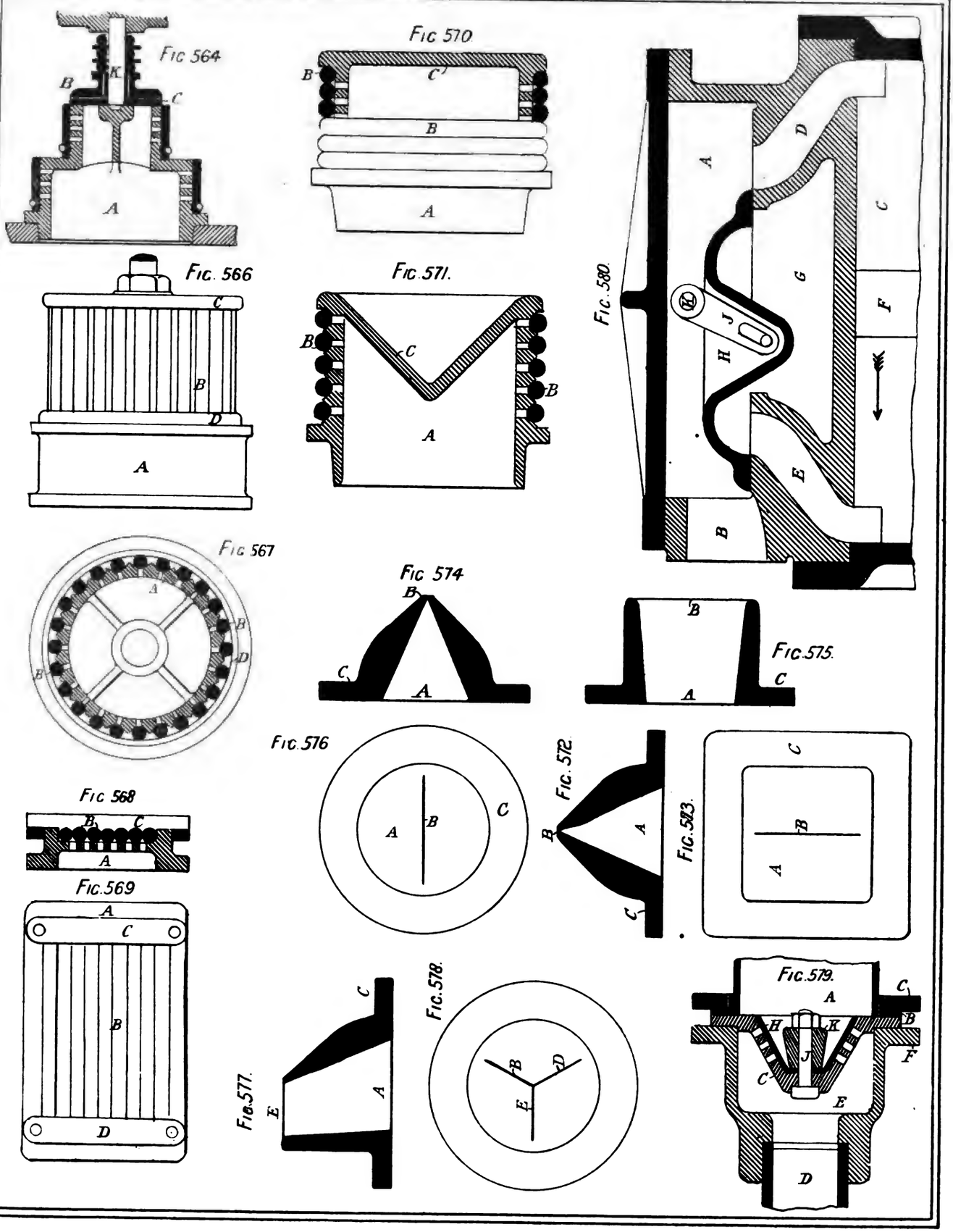
Fig 564
B
K
C
A
Fig 570
B
C
B
A
Fig. 566
C
B
D
A
Fig. 571.
B
C
B
A
Fig. 580.
D
A
C
G
F
H
J
E
B
Fig 567
A
B
D
B
Fig 574
B
C
A
B
Fig. 575.
A
C
Fig. 576
A
B
C
Fig 568
B
C
A
Fig. 572
B
A
C
Fig. 573.
C
B
A
Fig. 569
A
C
B
D
Fig. 577.
C
A
E
Fig. 578.
B
D
E
Fig. 579.
A
C
H
K
B
J
F
C
E
D

FIG. 581

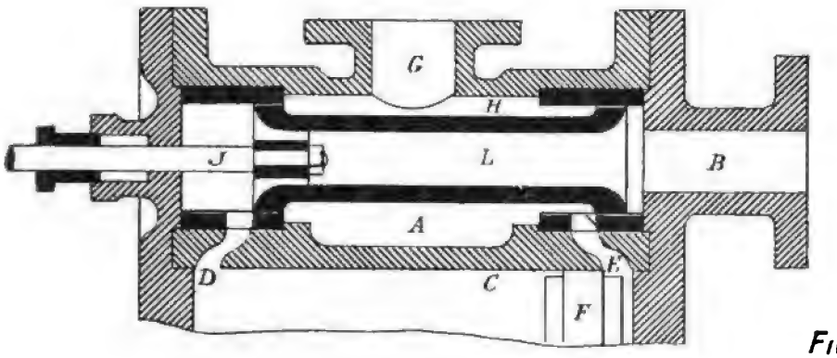

FIG. 584.

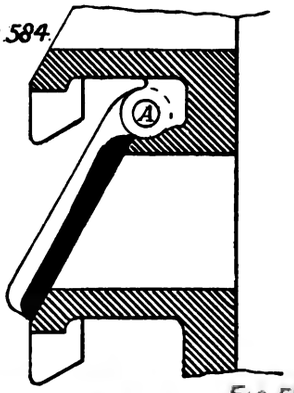

FIG. 603.

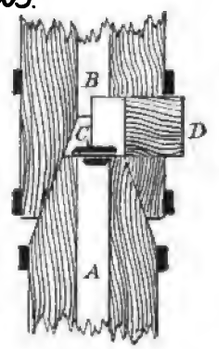

FIG. 585

FIG. 582.

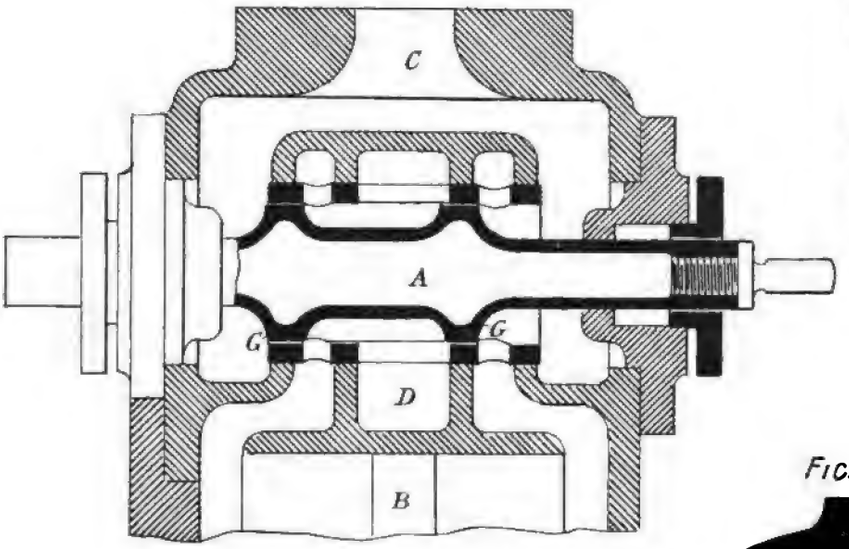

FIG. 586

FIG. 590.

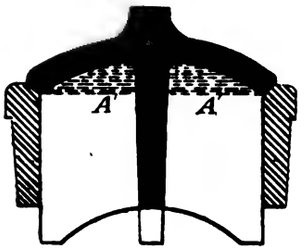

FIG. 587.

FIG. 583.

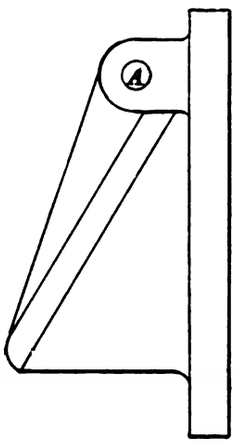

FIG 591.

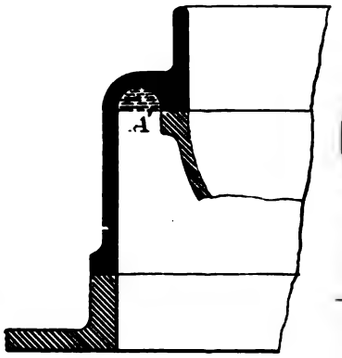

FIG. 589.

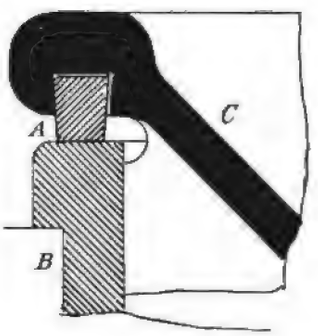

FIG. 588.

FIG. 592.

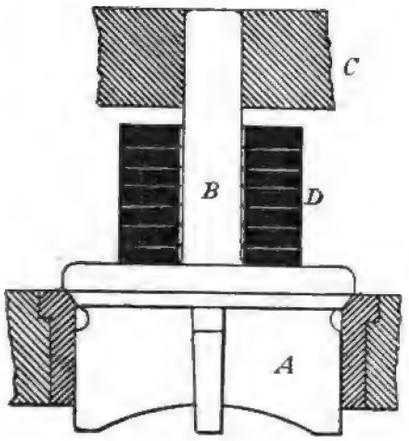

FIG. 593.

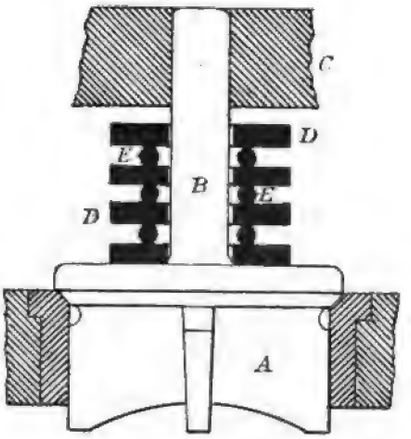

FIG. 594.

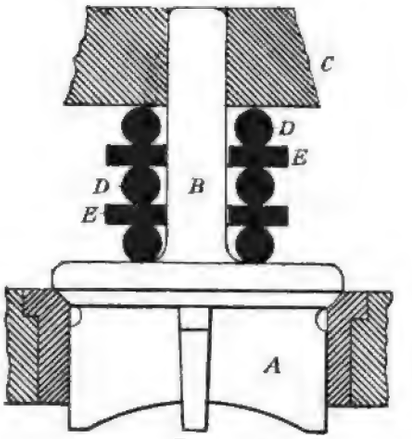

FIG. 595.

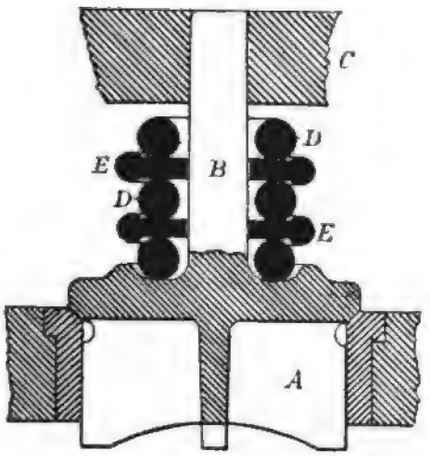

FIG. 597.

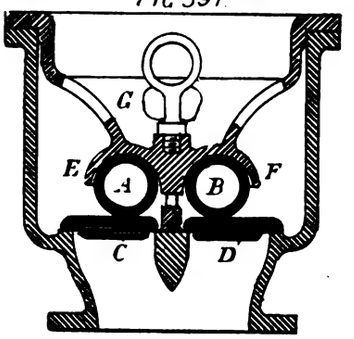

FIG. 598.

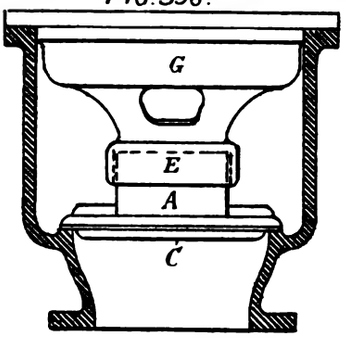

FIG. 599.

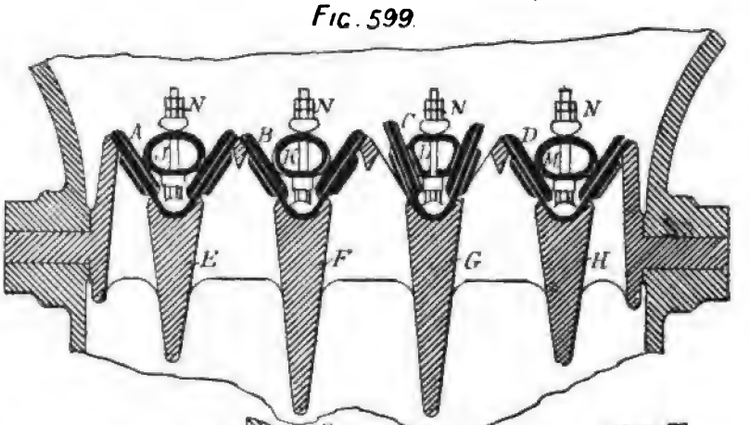

FIG. 596.

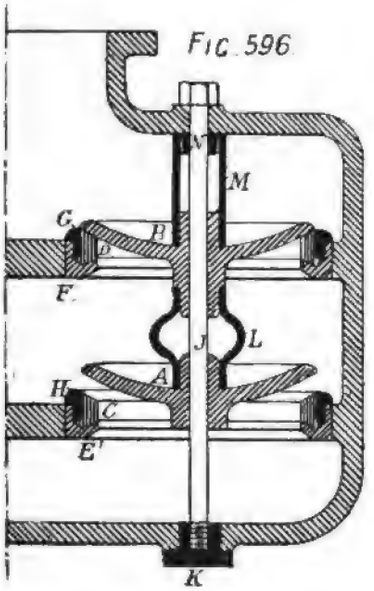

FIG. 600.

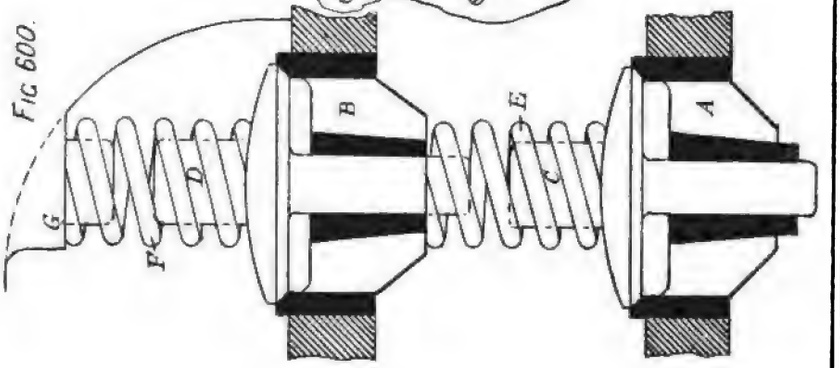

Fig. 601.

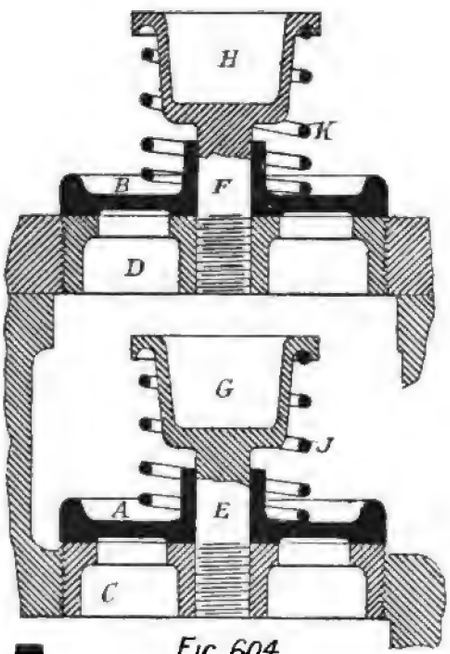

Fig. 606.

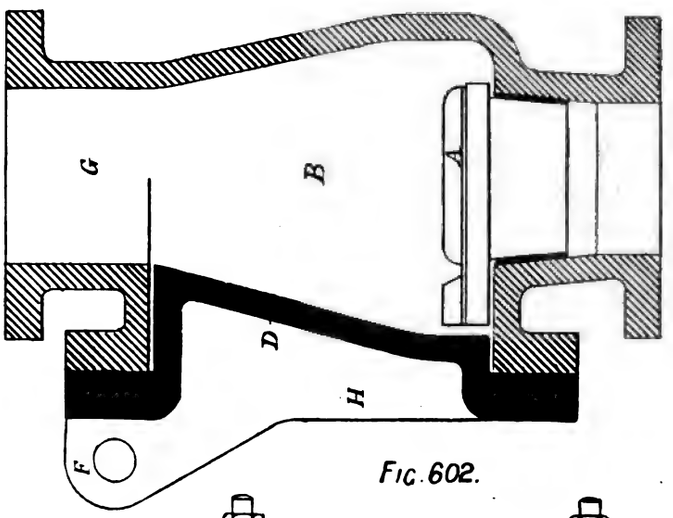

Fig. 602.

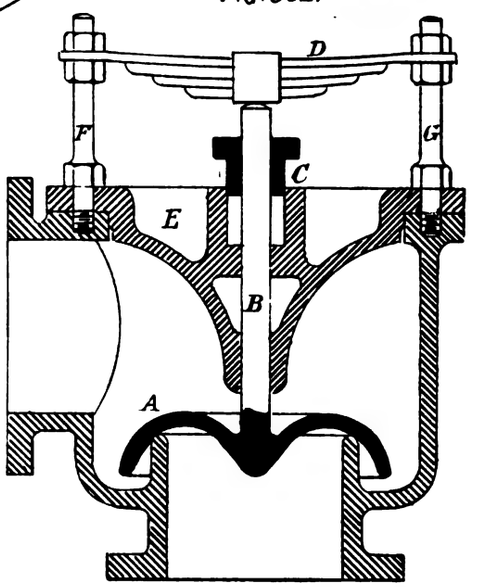

Fig. 604.

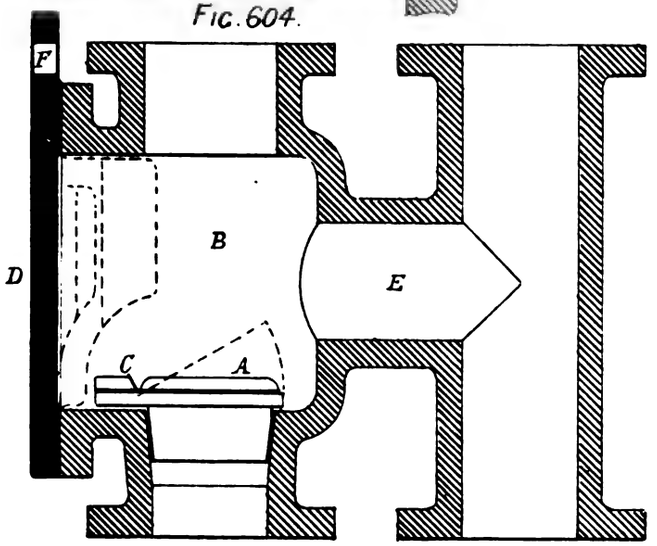

Fig. 605

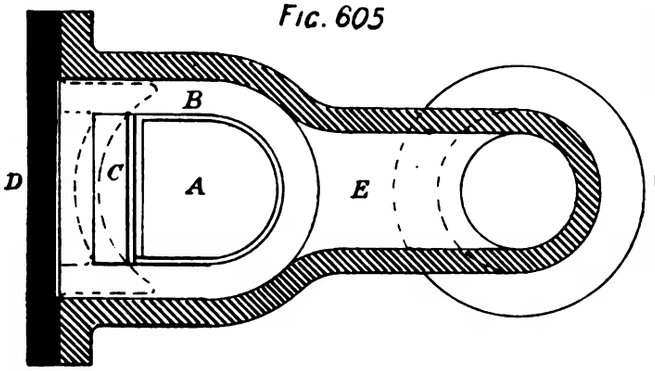

Fig. 615.

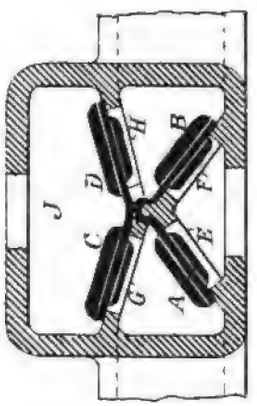

Fig. 616.

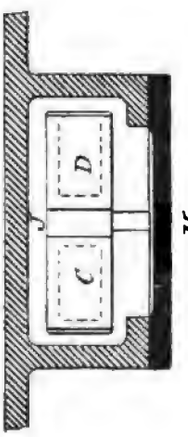

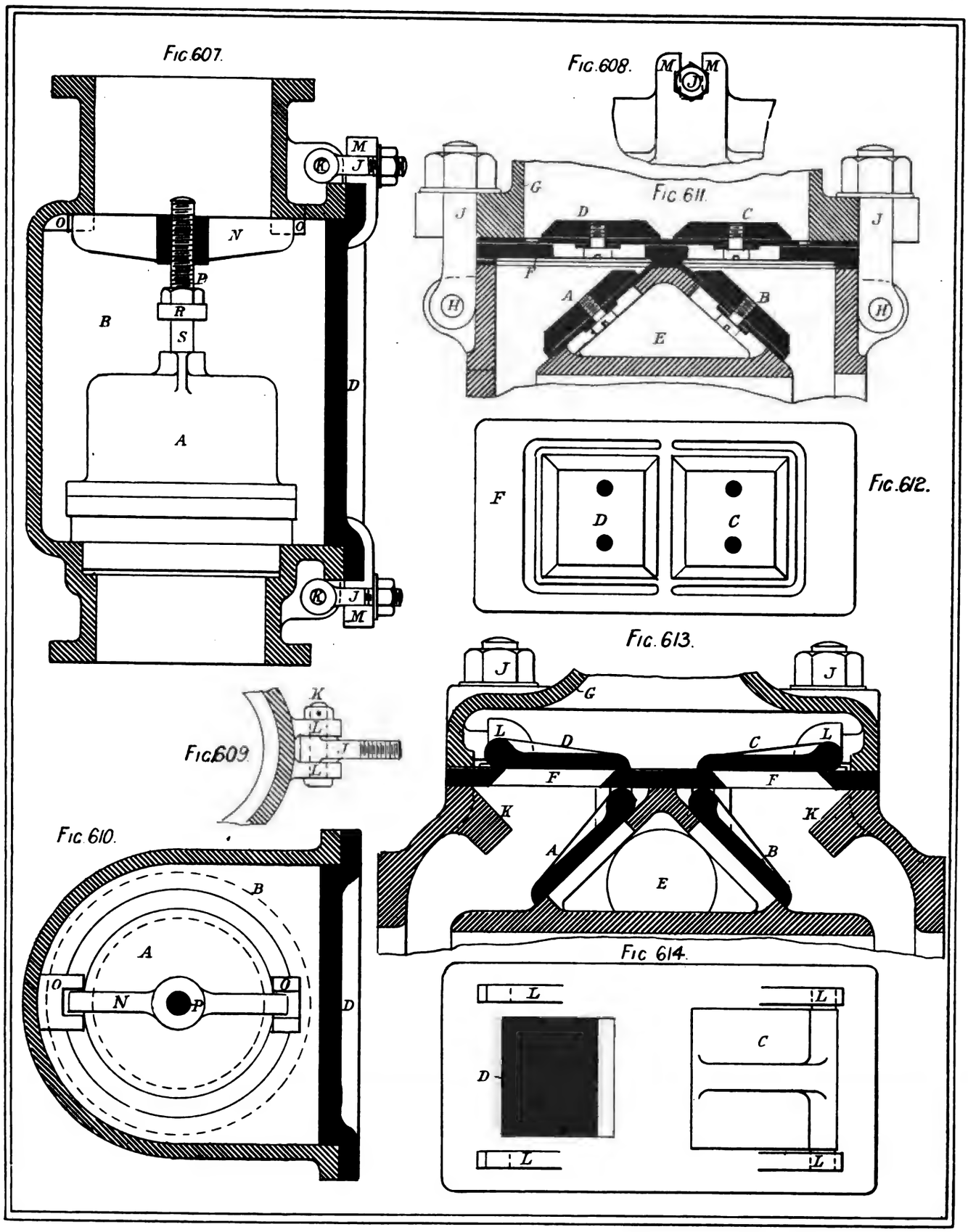
Fig.607.
M
J
K
O
N
Q
P
R
S
B
D
A
K
J
M
Fig.608.
M
M
J
G
Fig 611.
J
D
C
J
F
A
B
H
H
E
F
D
C
Fig.612.
Fig.613.
J
J
G
L
D
C
L
F
F
K
K
A
B
E
Fig.609.
K
L
J
L
Fig.610.
B
A
O
N
P
O
D
Fig 614.
L
L
D
C
L
L

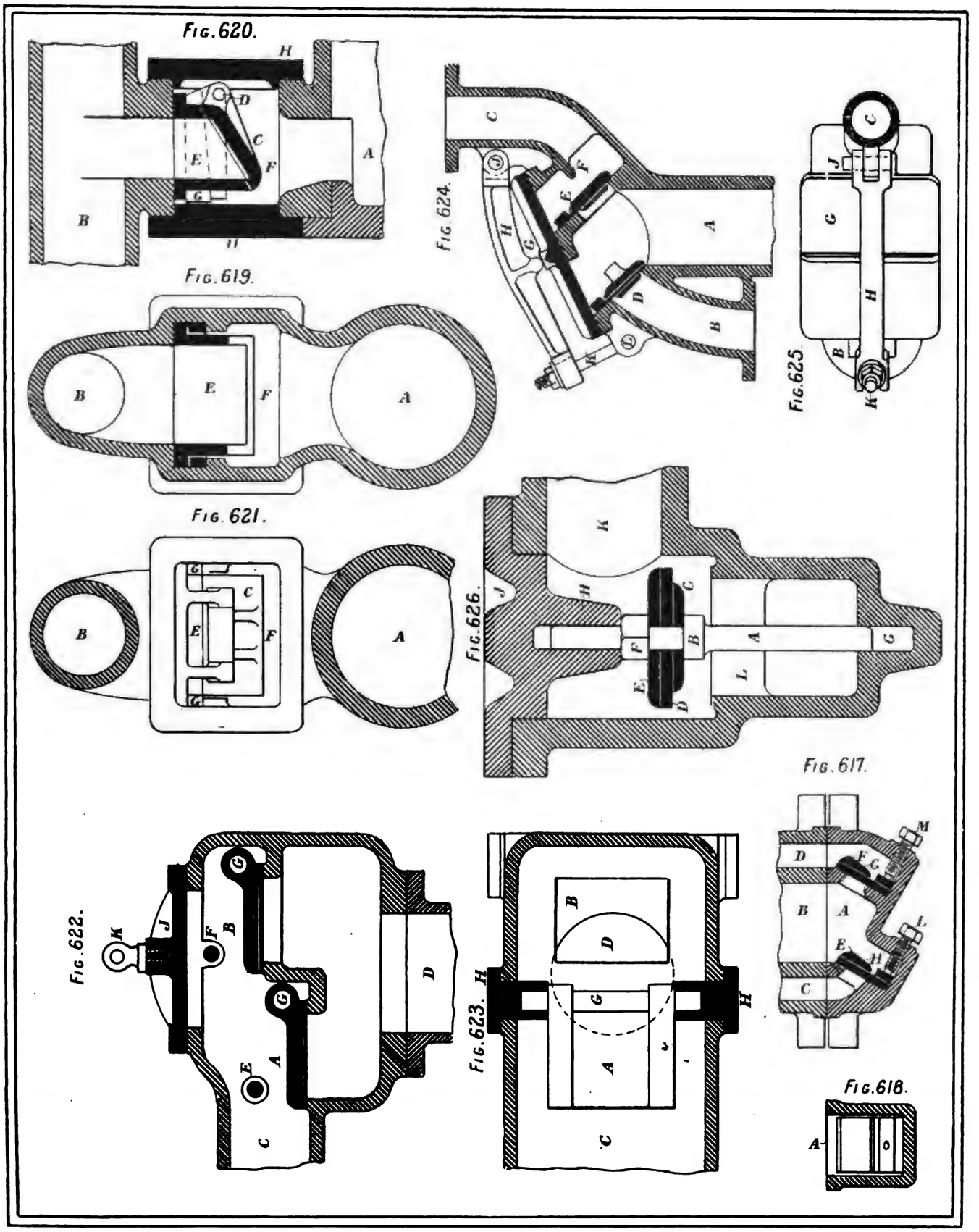
Fig. 620.
H
D
C
E
F
G
A
B
Fig. 619.
B
E
F
A
Fig. 621.
G
C
E
F
A
Fig. 624.
C
F
E
H
G
A
D
B
Fig. 625.
C
J
G
H
B
K
Fig. 626.
K
J
H
C
B
F
A
G
E
D
L
Fig. 617.
M
D
F
G
B
A
L
E
H
C
Fig. 622.
K
J
F
B
G
D
G
E
A
C
Fig. 623.
B
D
H
G
H
A
C
Fig. 618.
A

Fig. 628.

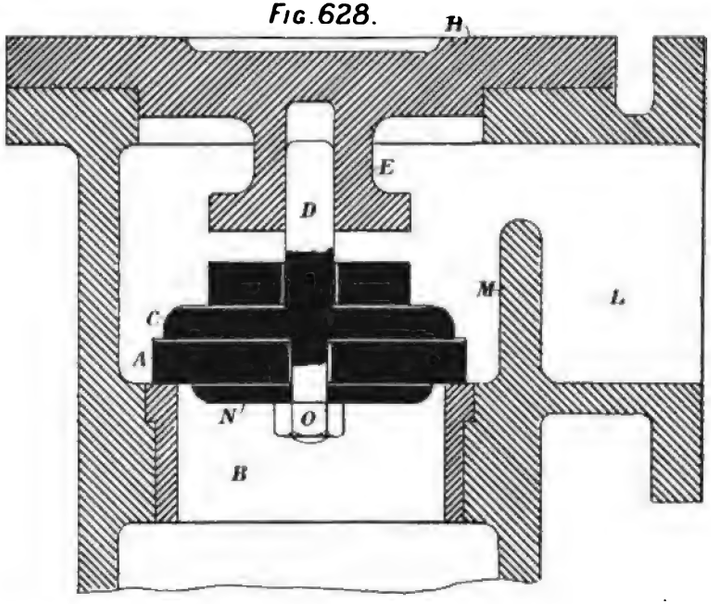

Fig. 627.

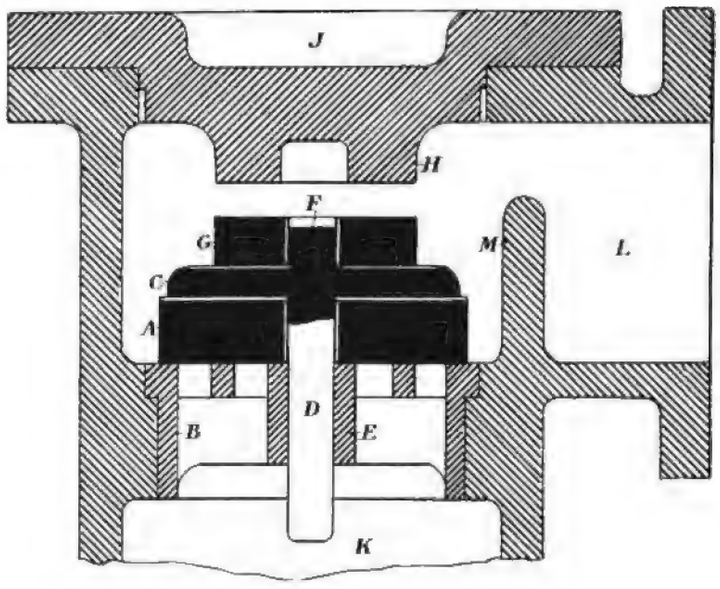

Fig 631.

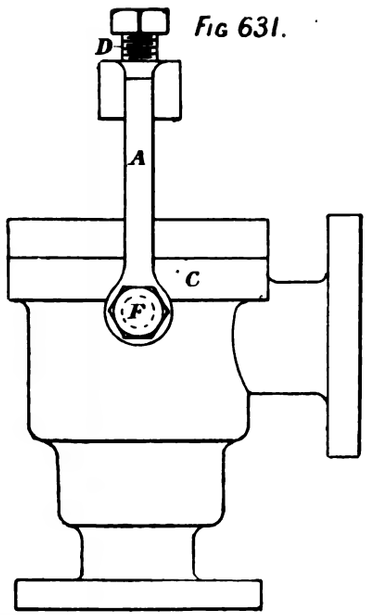

Fig. 632.

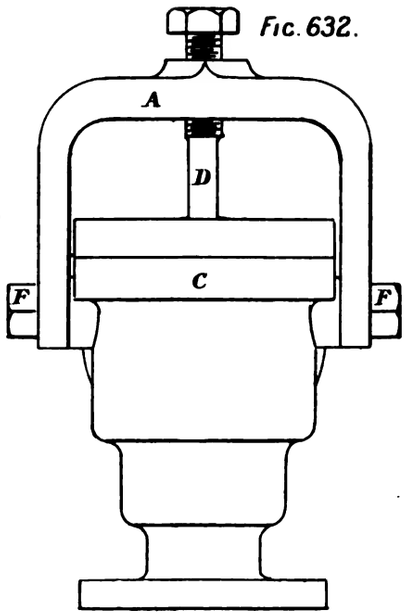

Fig. 629.

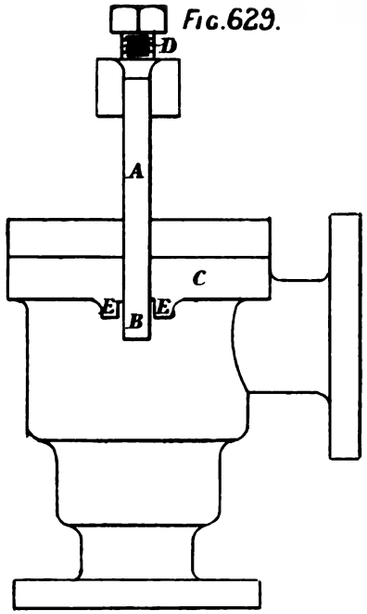

Fig. 630.

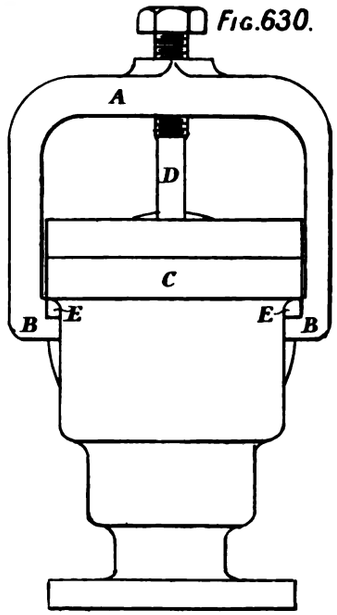

Plate CXXXVIII.

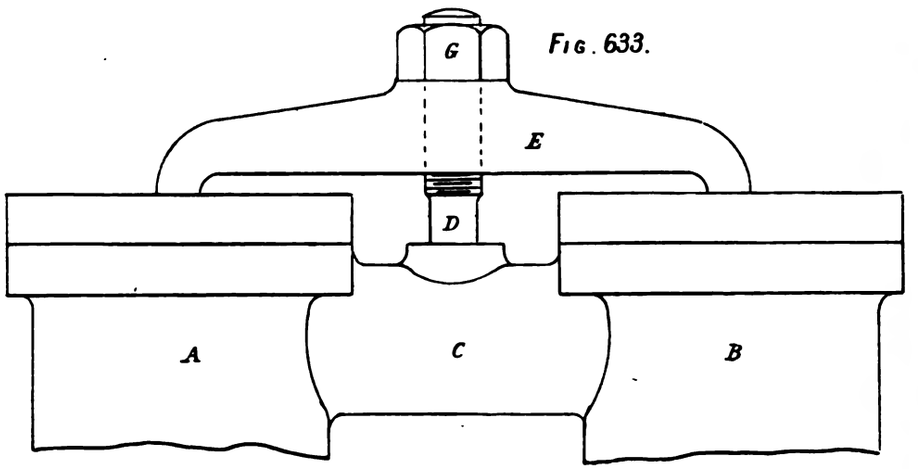

Fig. 633.

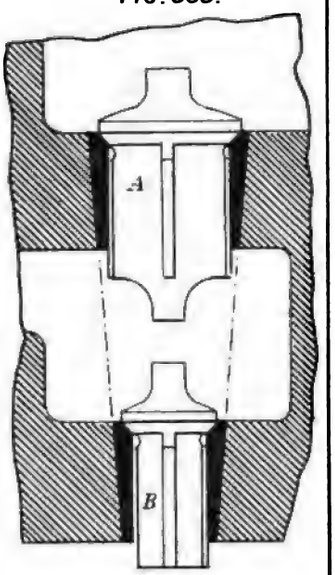

Fig. 635.

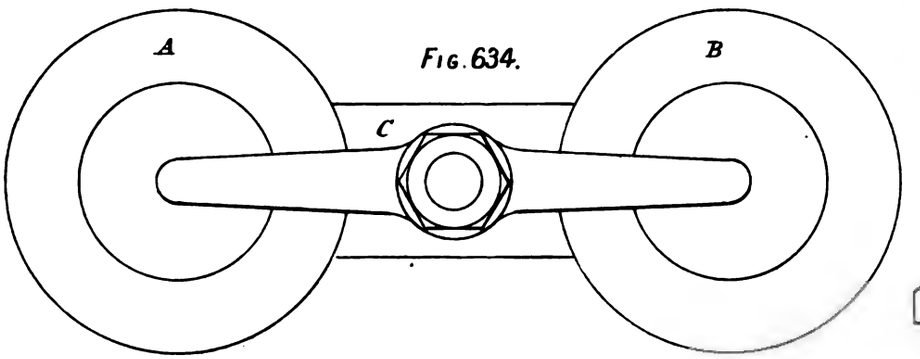

Fig. 634.

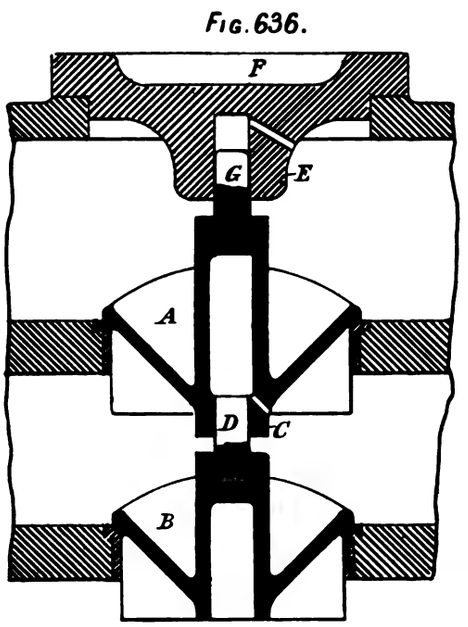

Fig. 636.

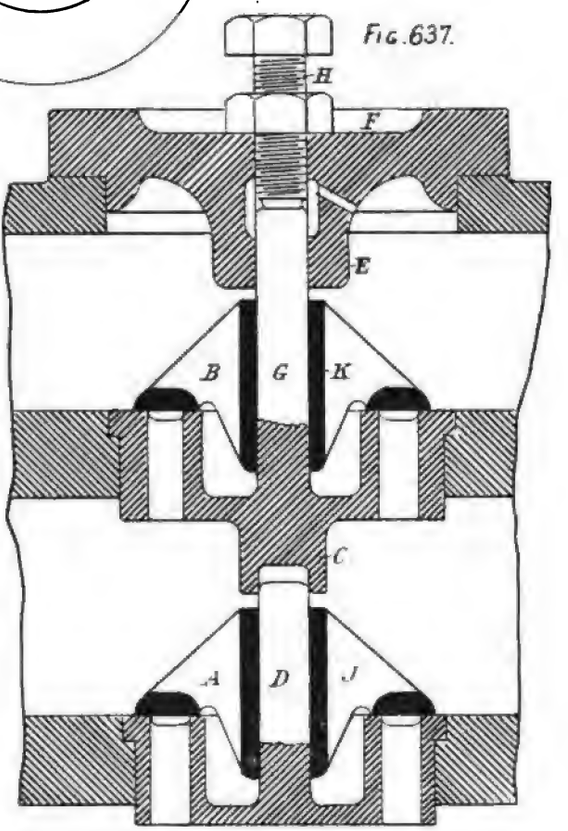

Fig. 637.

Fig. 638.

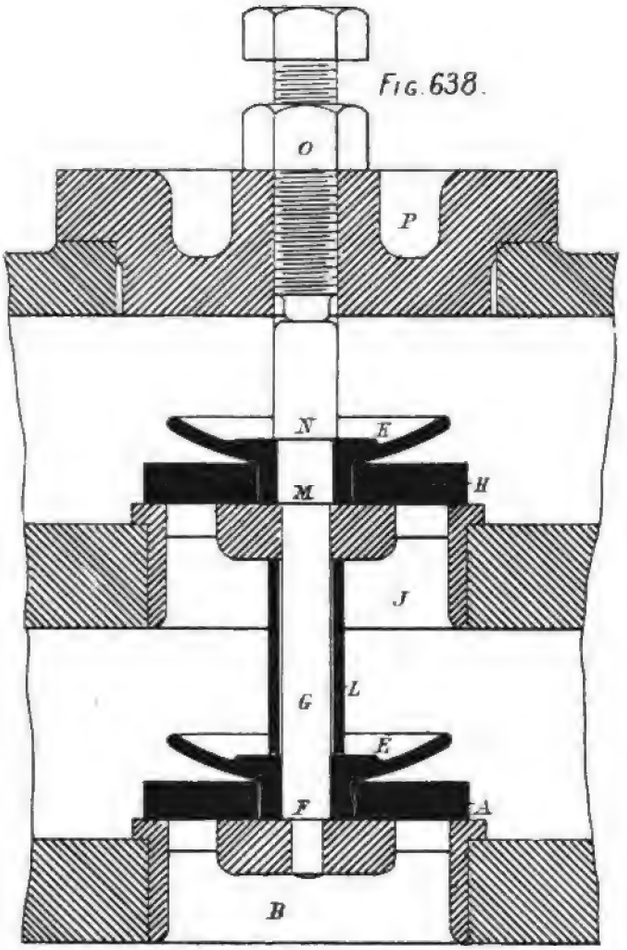

Fig. 639.

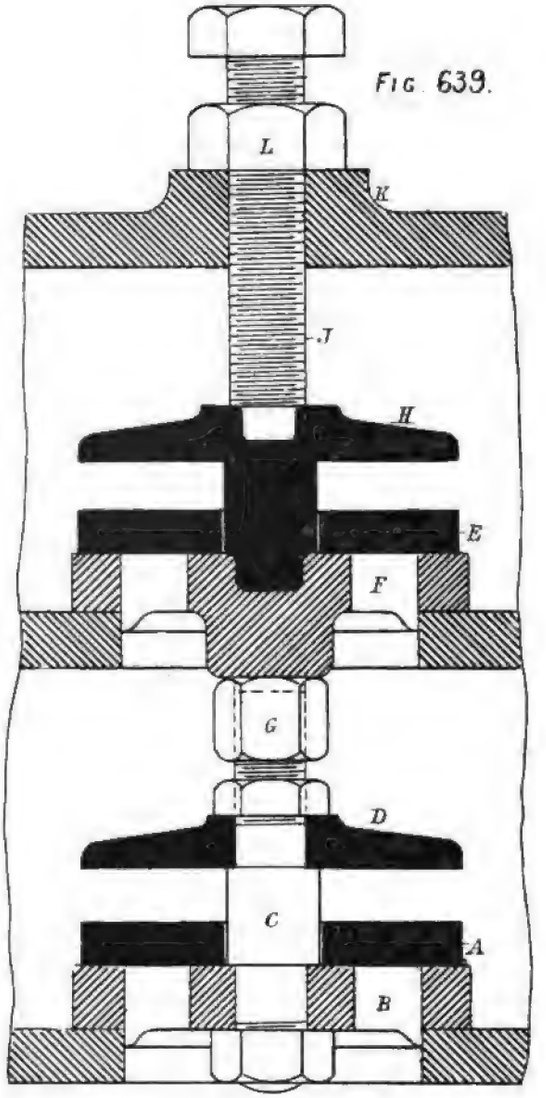

Fig. 640.

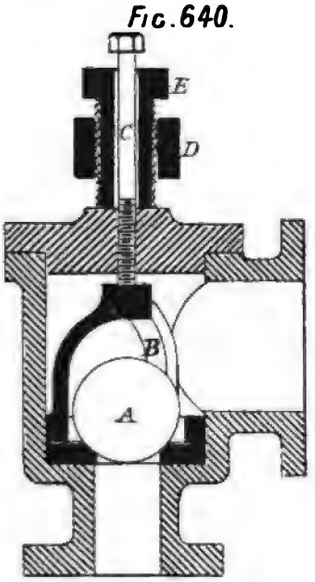

Fig. 641.

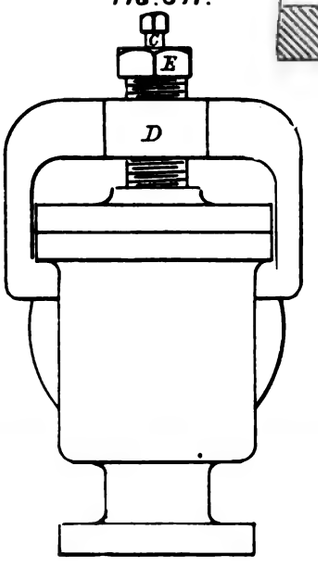

Fig. 643.

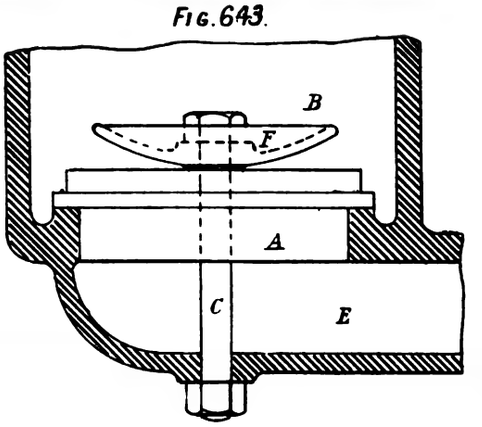

FIG. 642.

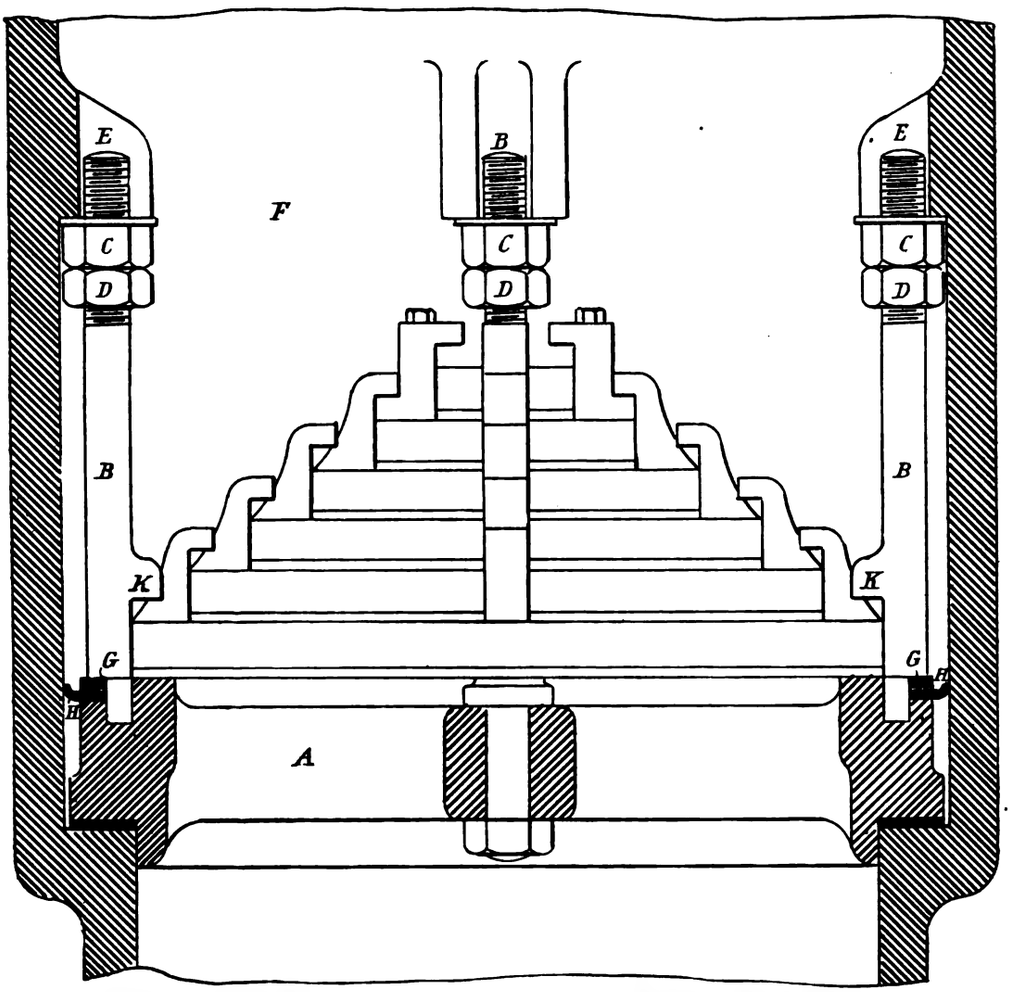

FIG. 645.

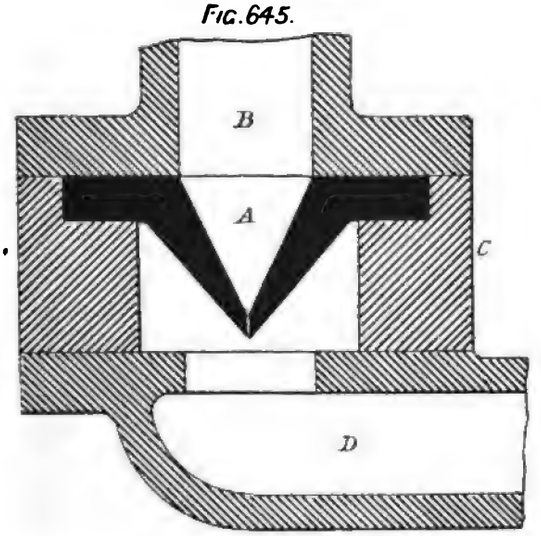

FIG. 646.

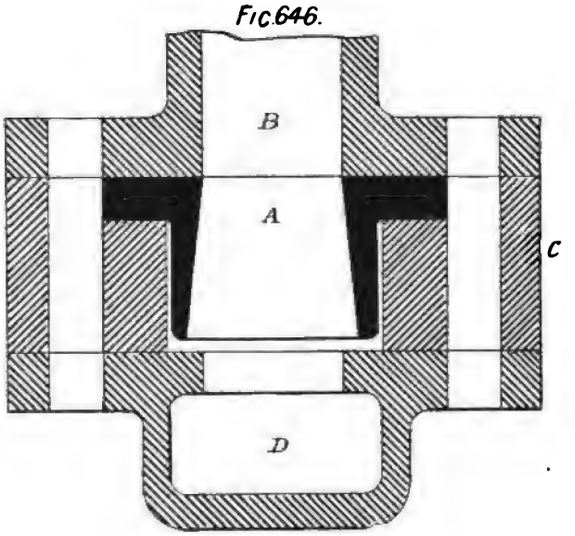

Fig 644.

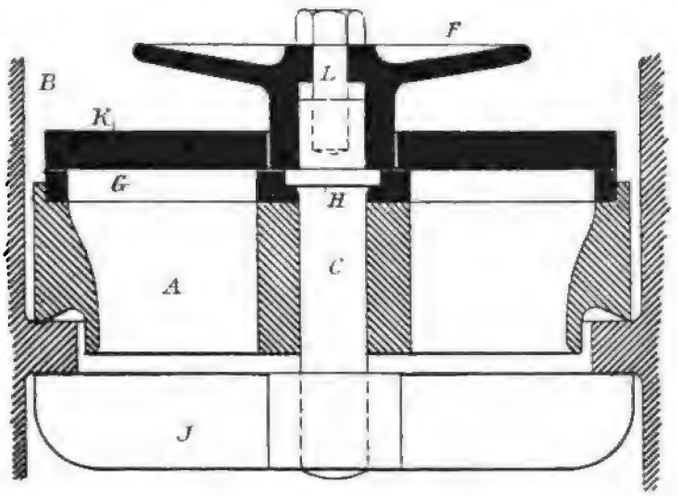

Fig. 647.

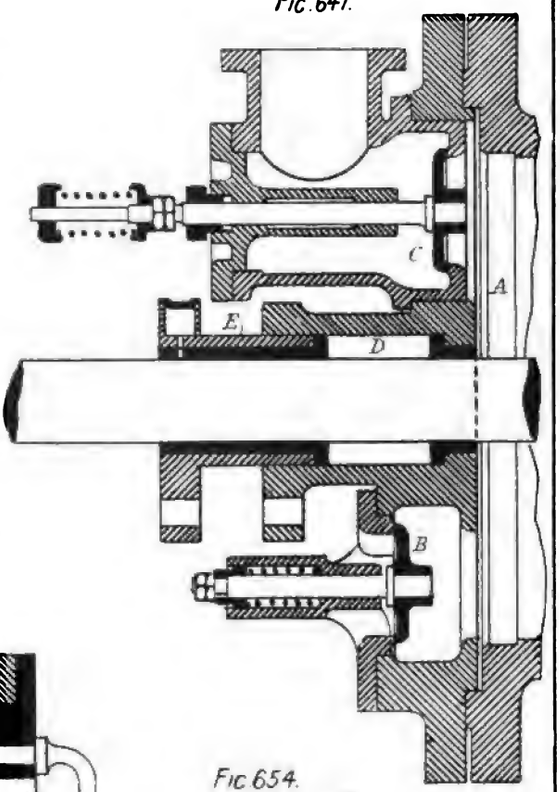

Fig. 648.

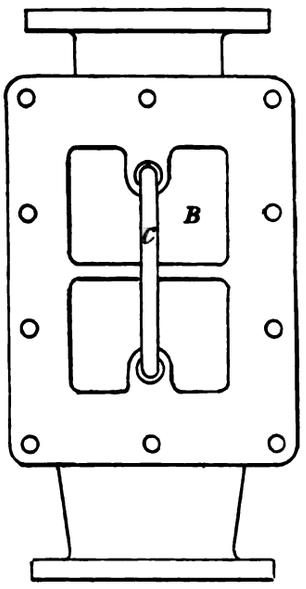

Fig. 649.

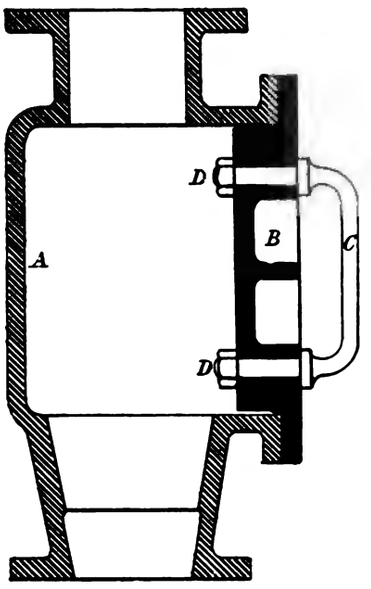

Fig. 654.

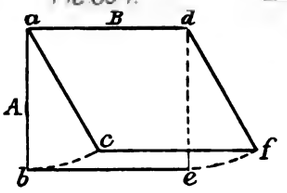

Fig. 650.

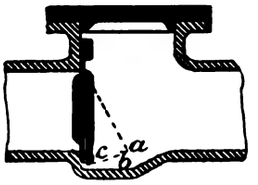

Fig. 652.

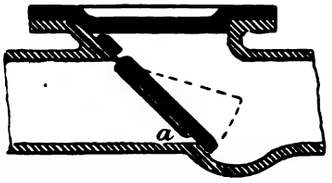

Fig. 653.

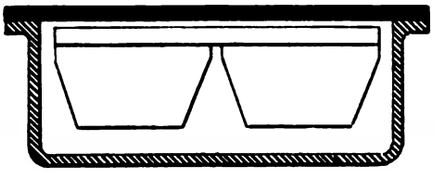

Fig. 651.

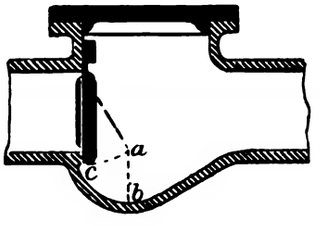

Plate CXLIII

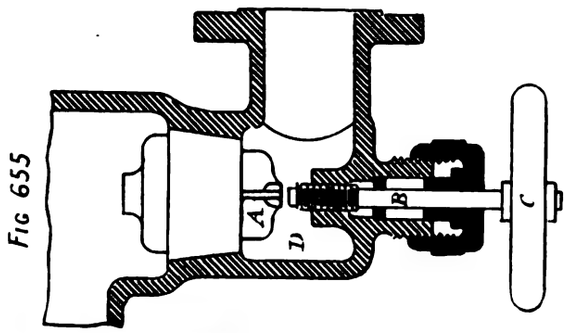

Fig 655

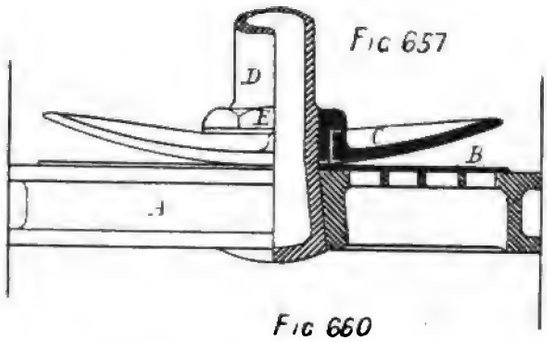

Fig 657

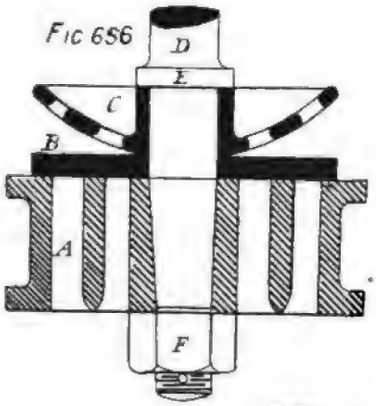

Fig 656

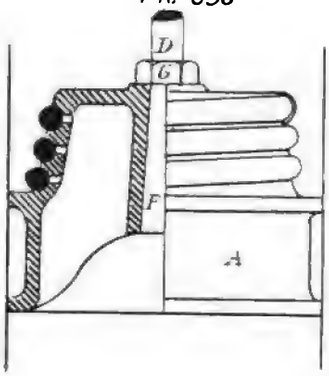

Fig 658

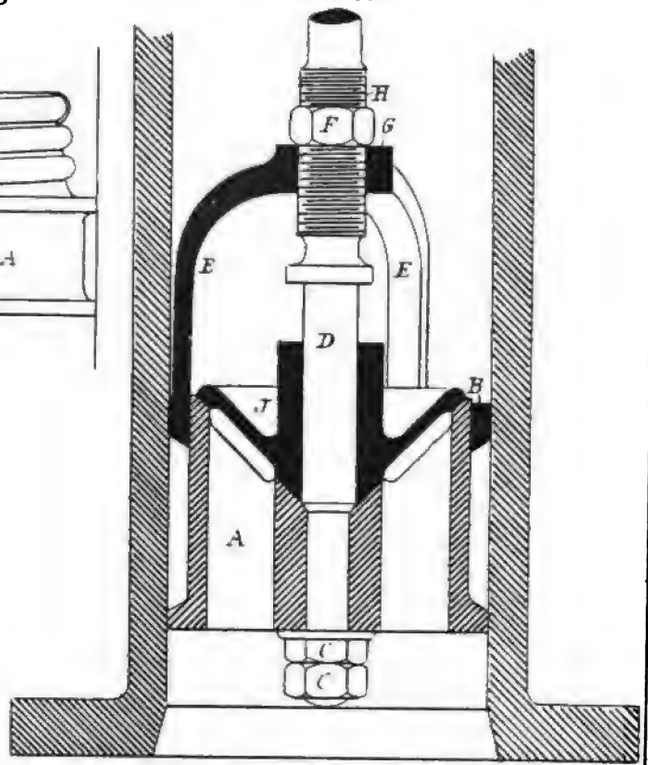

Fig 660

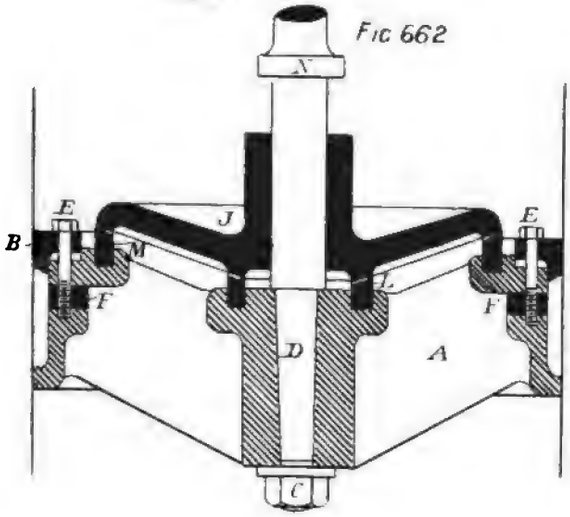

Fig 662

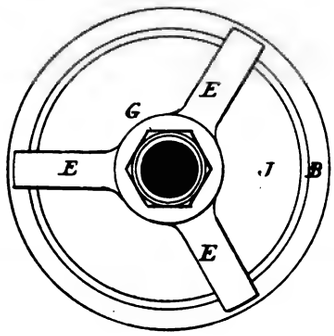

Fig 661

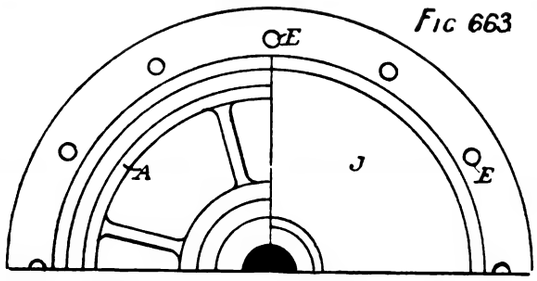

Fig 663

Fig. 659

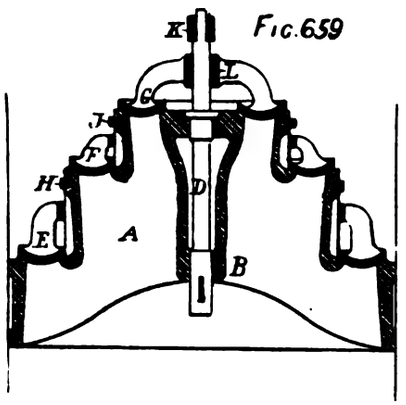

Fig 664

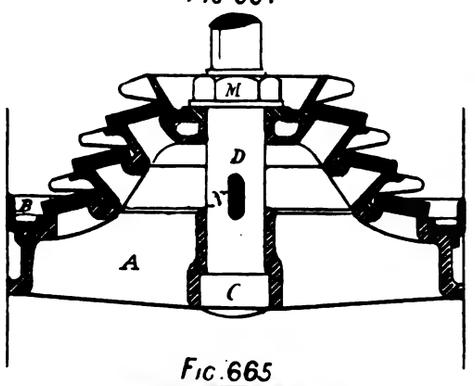

Fig. 665

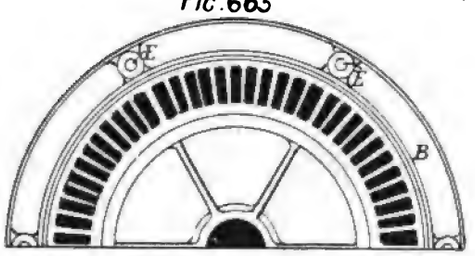

Fig. 668

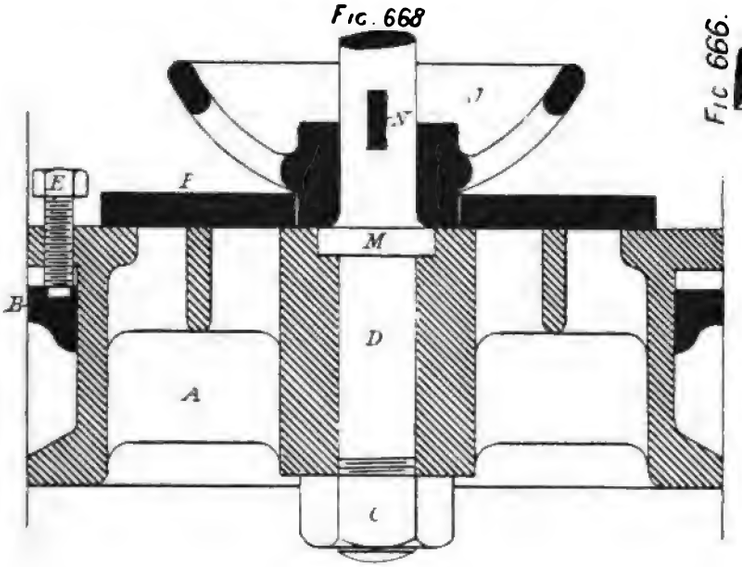

Fig 667

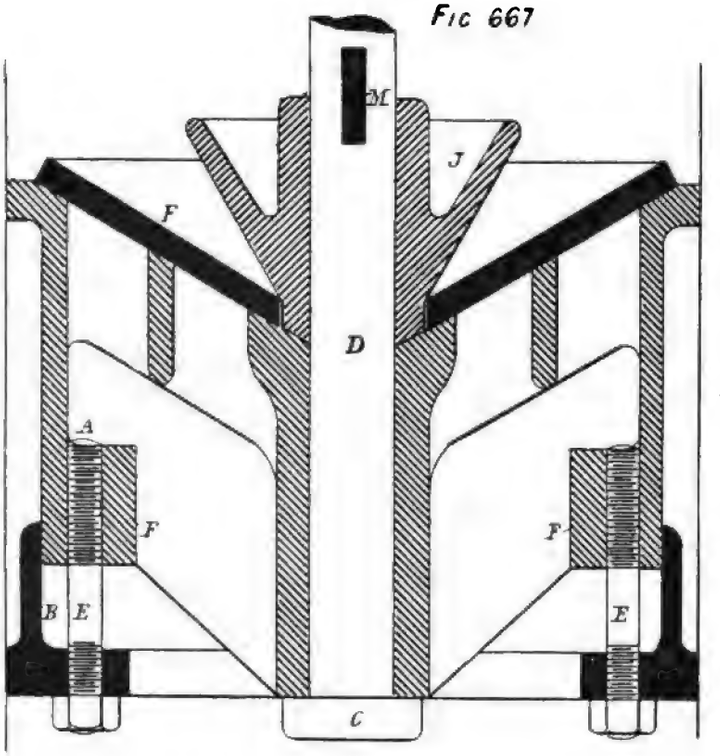

Fig 666.

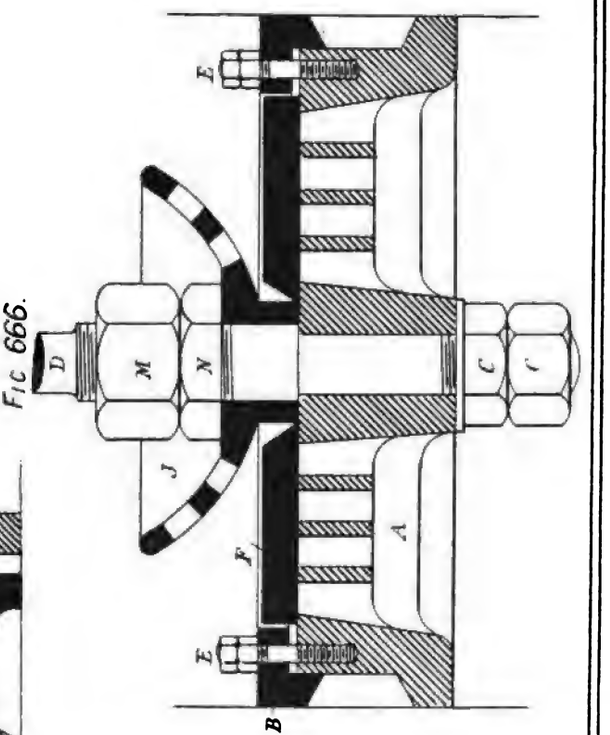

Fig. 669.

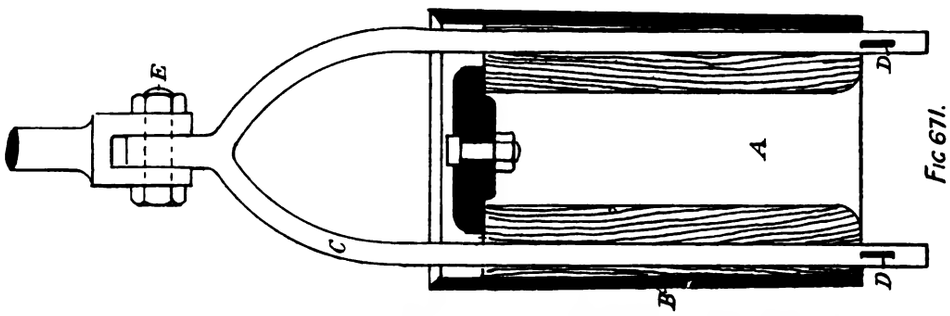

Fig. 671.

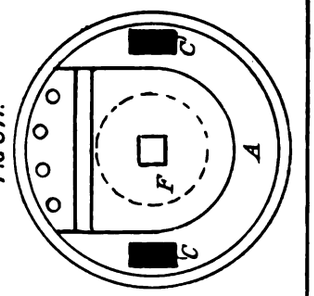

Fig. 670.

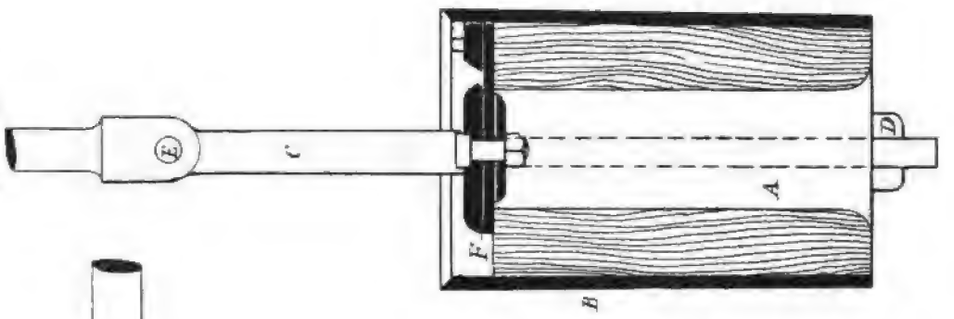

Fig. 680.

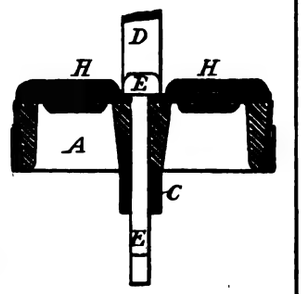

Fig. 672.

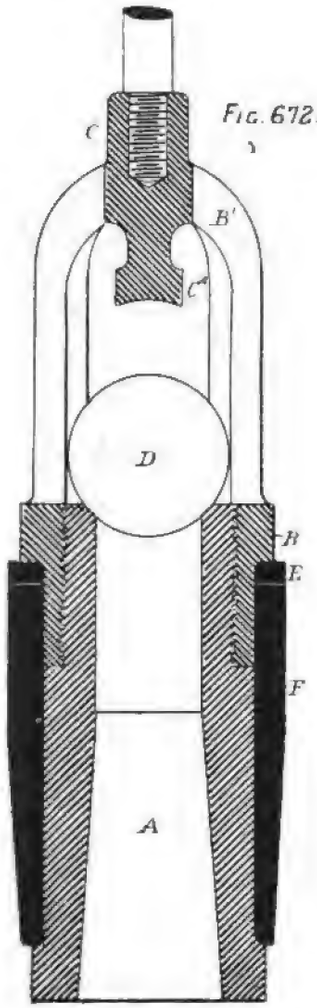

Fig. 673.

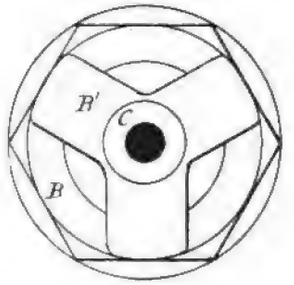

Fig. 674.

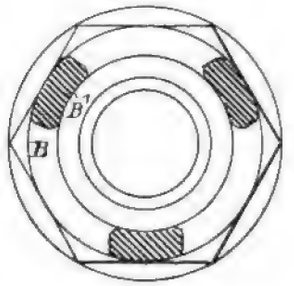

Fig. 677.

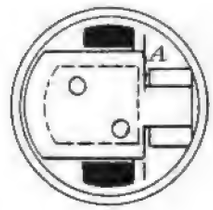

Fig. 681.

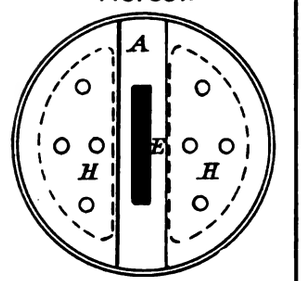

Fig. 675.

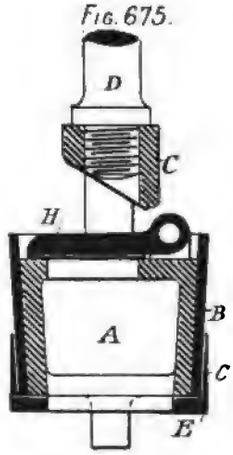

Fig. 676.

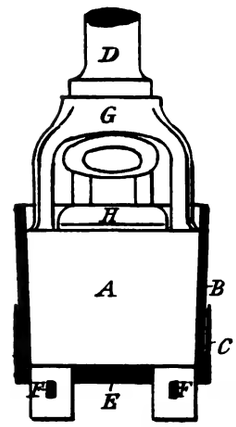

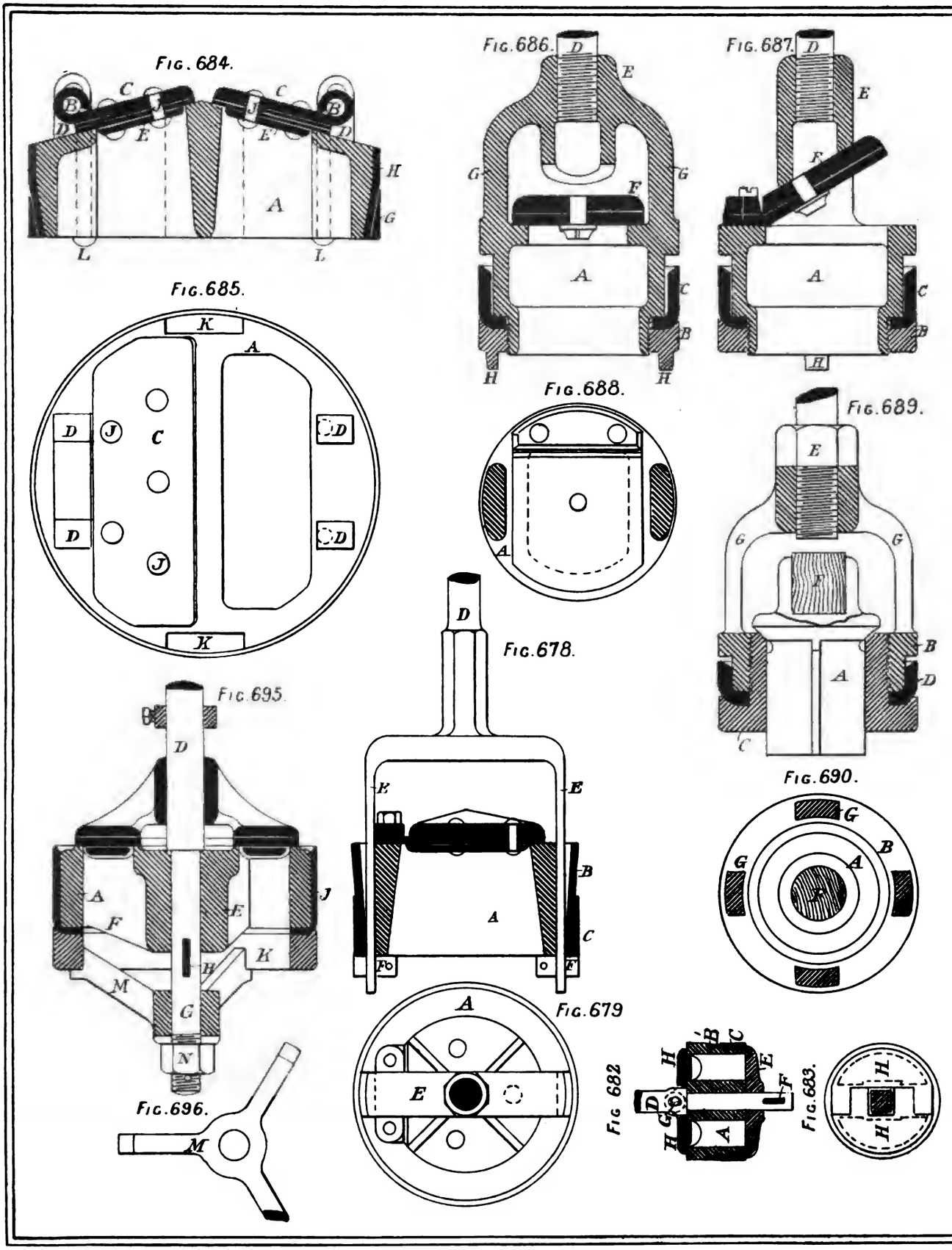
Fig. 684.
Fig. 686.
Fig. 687.
Fig. 685.
Fig. 688.
Fig. 689.
Fig. 678.
Fig. 690.
Fig. 695.
Fig. 679
Fig. 682
Fig. 683.
Fig. 696.

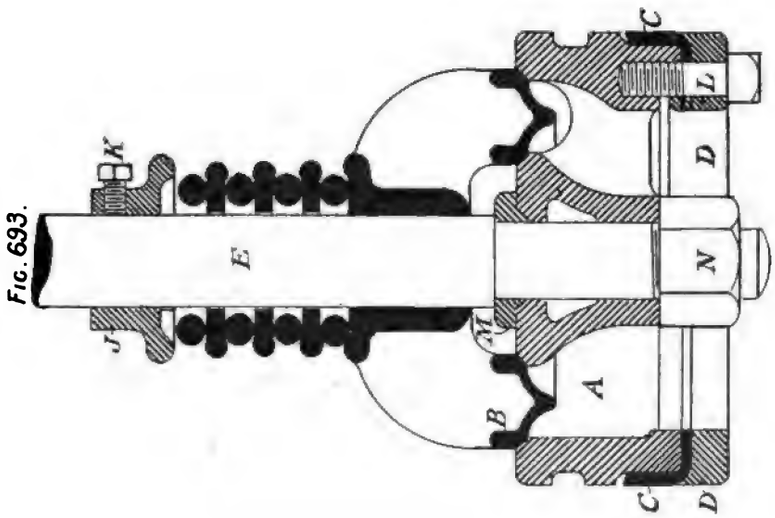

Fig. 693.

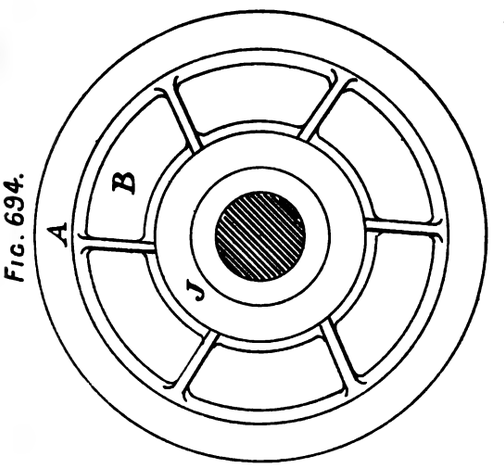

Fig. 694.

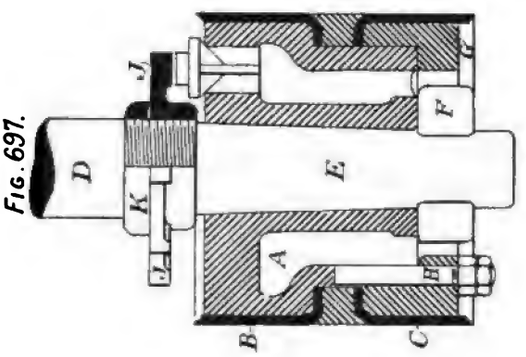

Fig. 697.

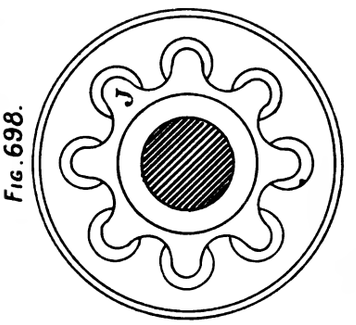

Fig. 698.

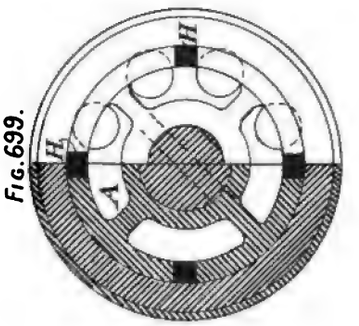

Fig. 699.

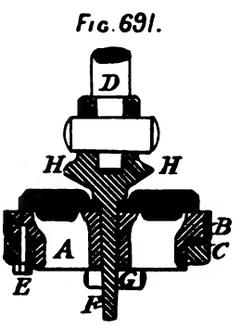

Fig. 691.

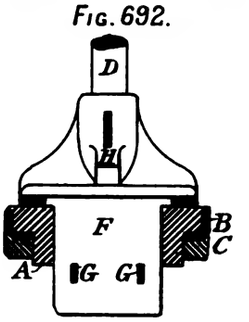

Fig. 692.

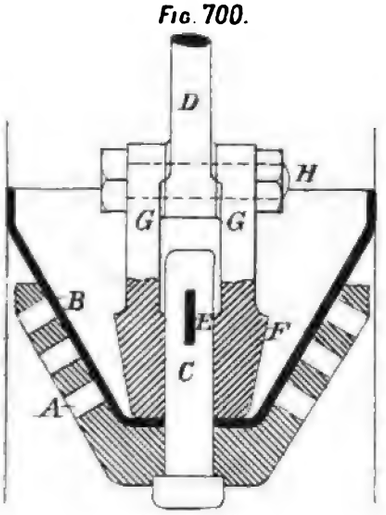

Fig. 700.

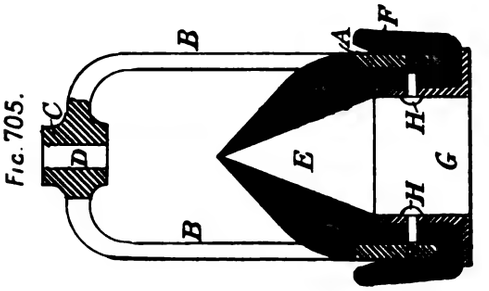

Fig. 705.

Fig. 701.

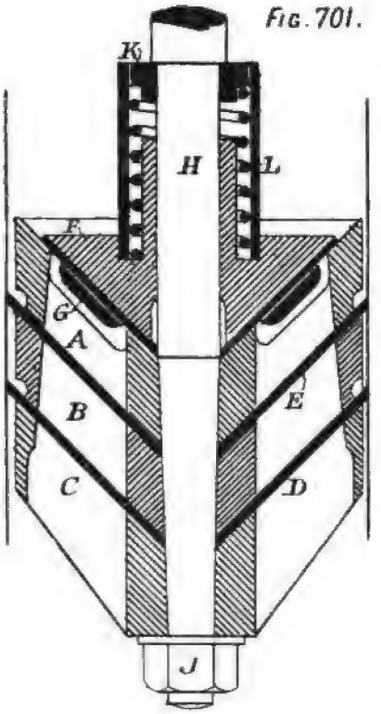

Fig. 703.

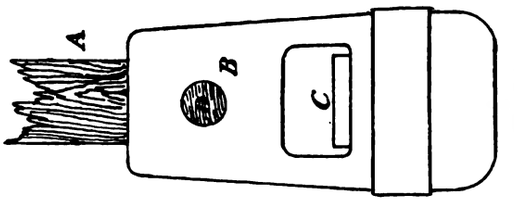

Fig. 714.

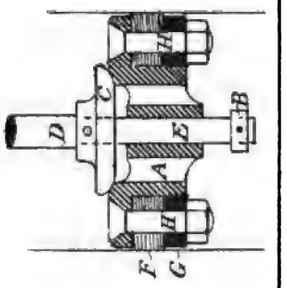

Fig. 702.

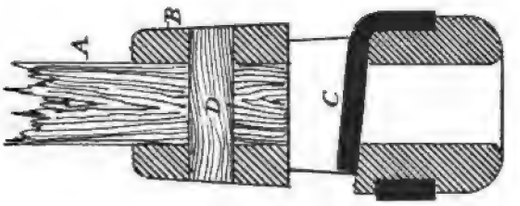

Fig. 704.

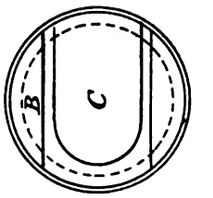

Fig. 711.

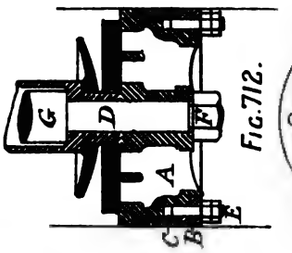

Fig. 712.

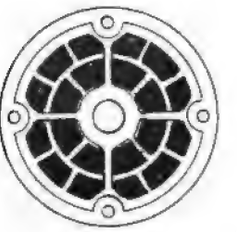

Fig. 706.

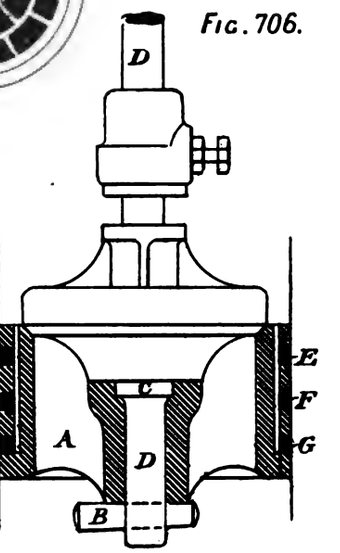

Fig. 708.

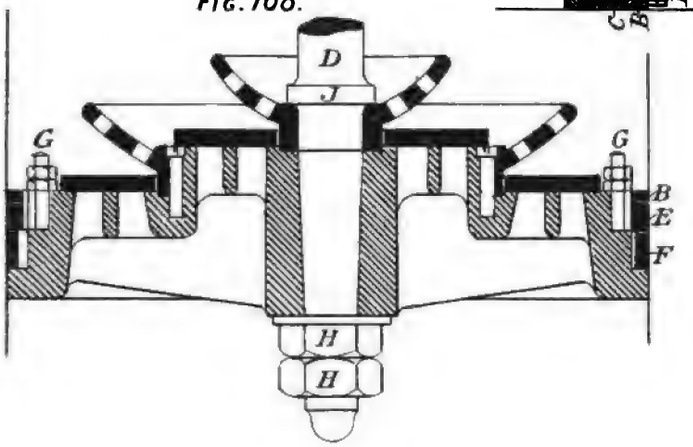

Fig. 709.

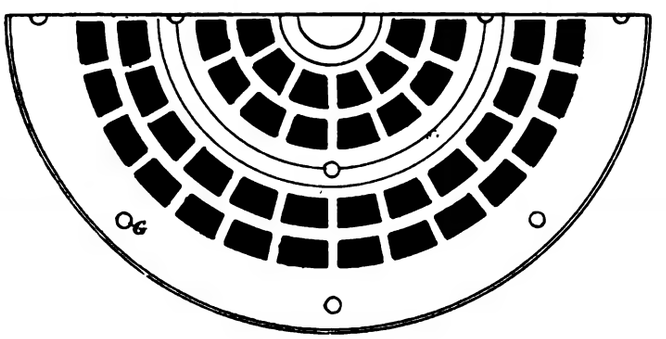

Fig. 707.

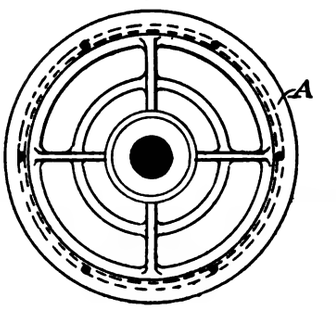

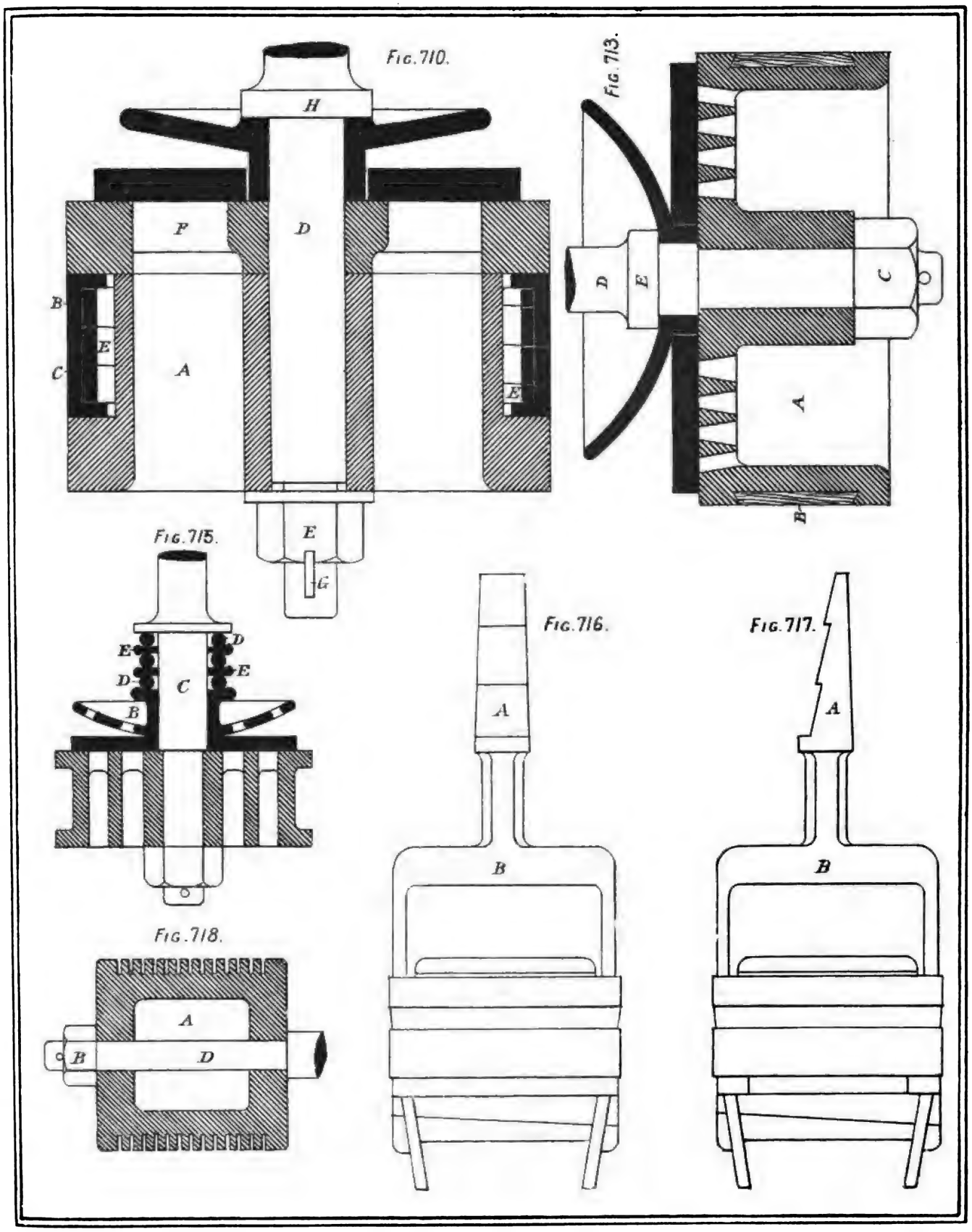
Fig. 710.
H
F
D
B
E
C
A
E
E
G
Fig. 713.
D
E
C
A
B
Fig. 715.
E
D
C
D
E
B
Fig. 716.
A
B
Fig. 717.
A
B
Fig. 718.
A
B
D

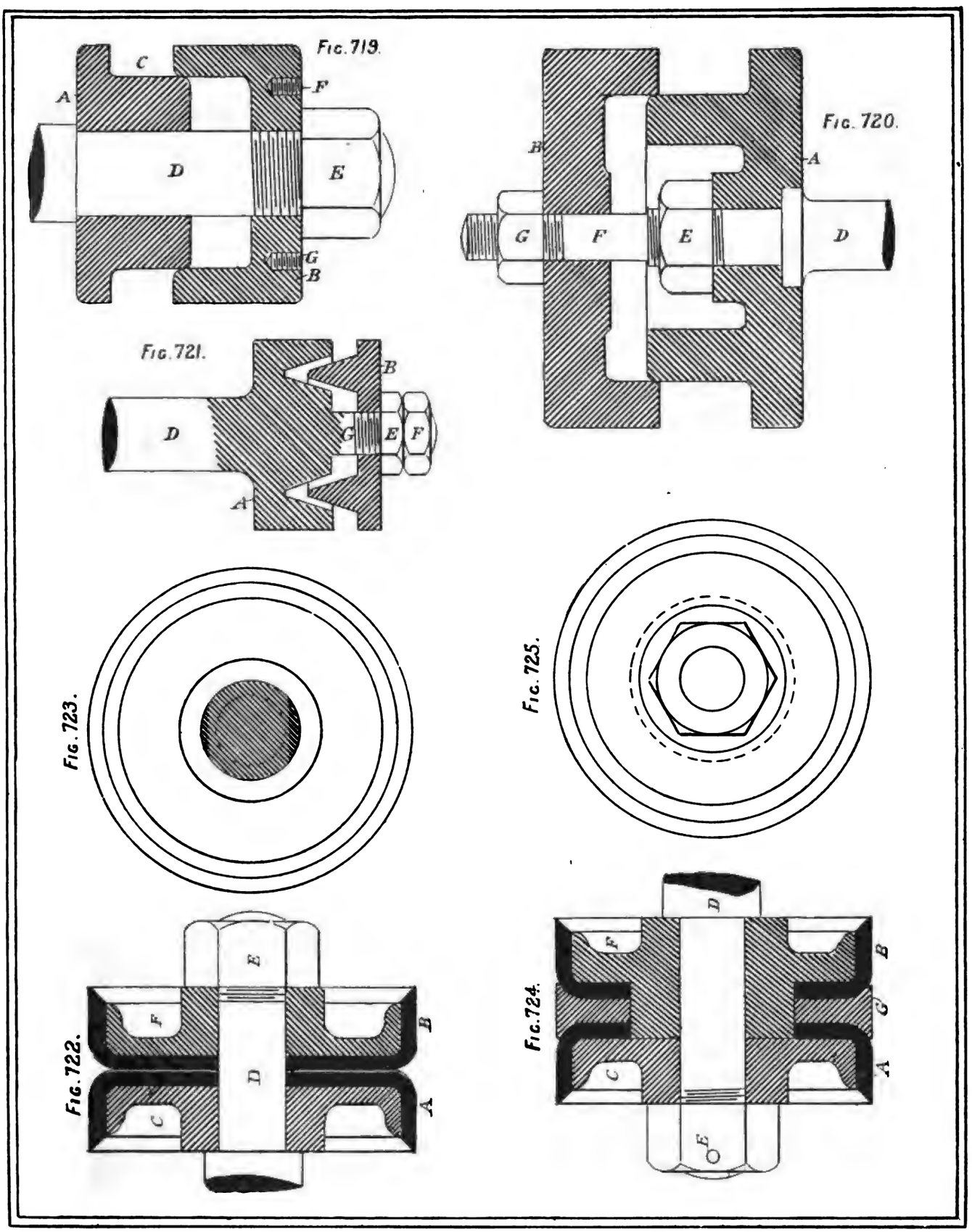
Fig. 719.
C
A
F
D
E
G
B
Fig. 720.
B
A
G
F
E
D
Fig. 721.
B
D
G
E
F
A
Fig. 723.
Fig. 725.
Fig. 722.
E
F
B
D
C
A
Fig. 724.
D
F
B
G
C
A
E

Fig. 727.

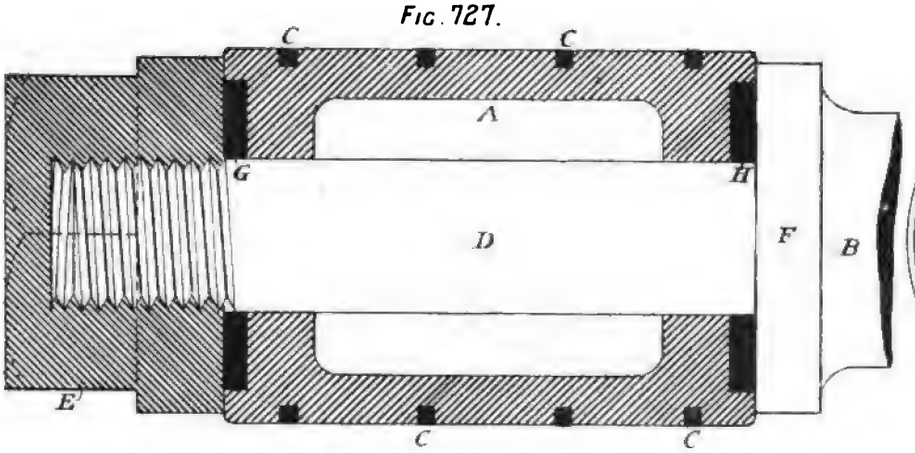

Fig. 728.

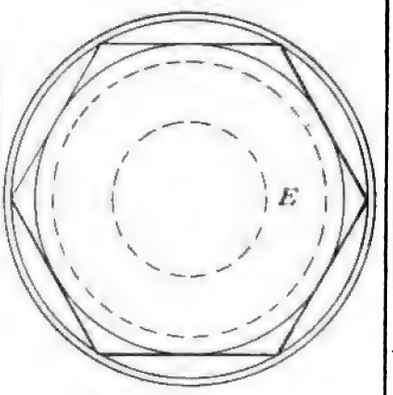

Fig. 726.

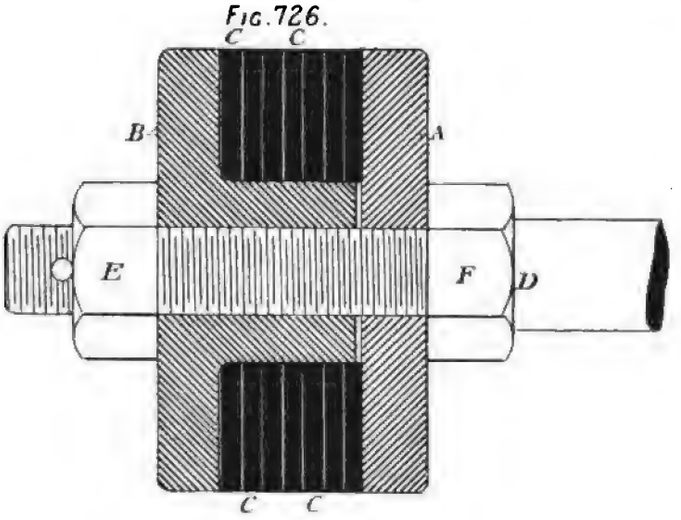

Fig. 735.

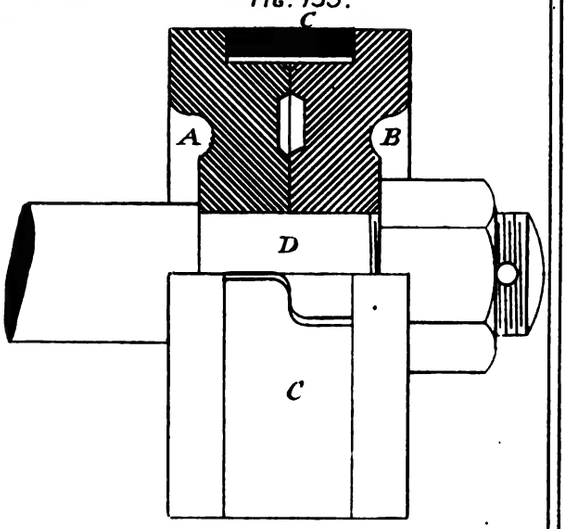

Fig. 729.

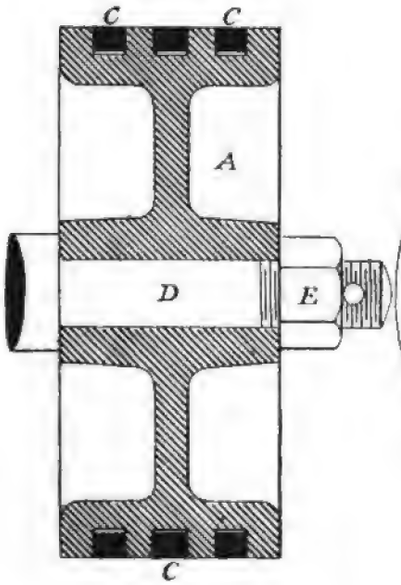

Fig. 730.

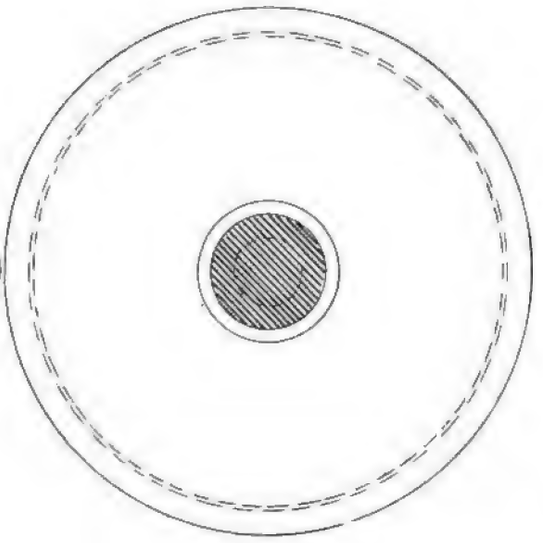

Fig. 736.

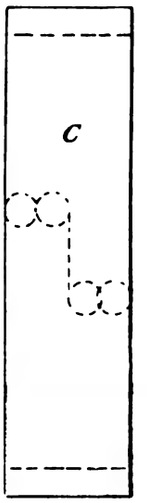

Fig. 737.

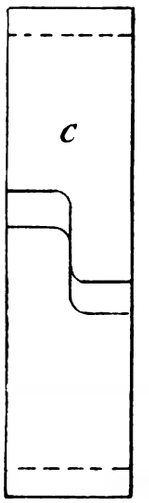

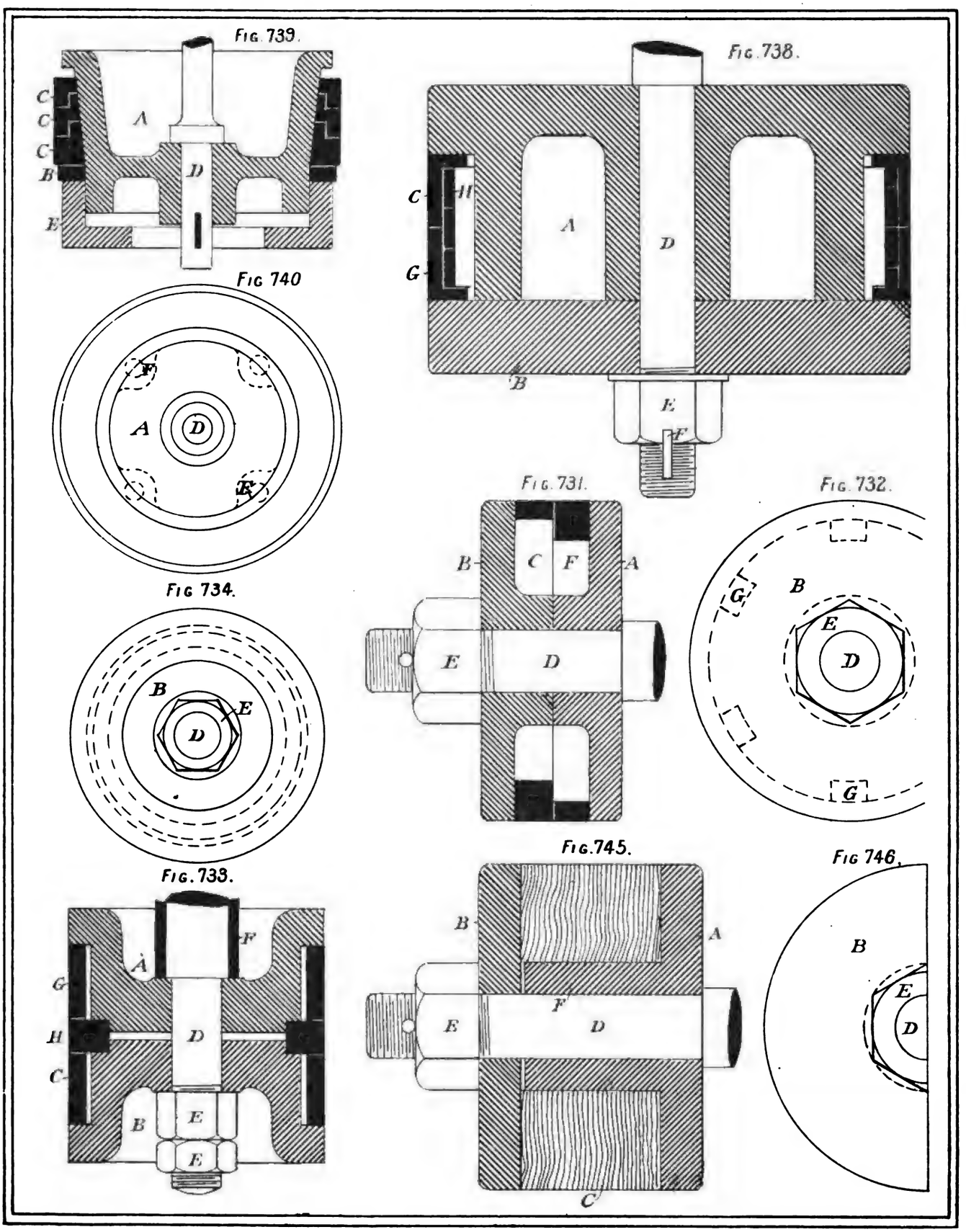
Fig. 739.
C
C
C
B
E
A
D
Fig. 738.
C
H
G
A
D
B
E
F
Fig 740
A
D
E
Fig. 731.
B
C
F
A
E
D
Fig. 732.
G
B
E
D
G
Fig 734.
B
E
D
Fig. 733.
A
F
G
H
C
D
B
E
E
Fig. 745.
B
A
F
E
D
C
Fig 746.
B
E
D

Fig. 741.

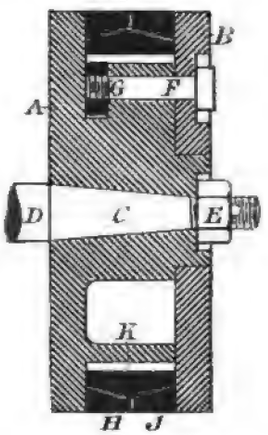

Fig. 742.

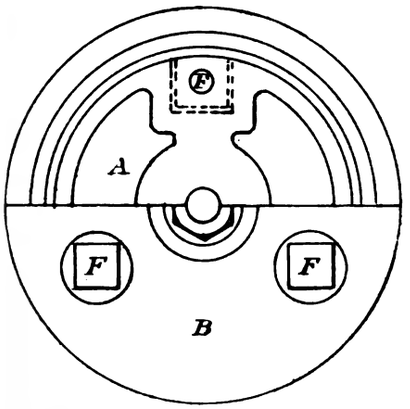

Fig. 743.

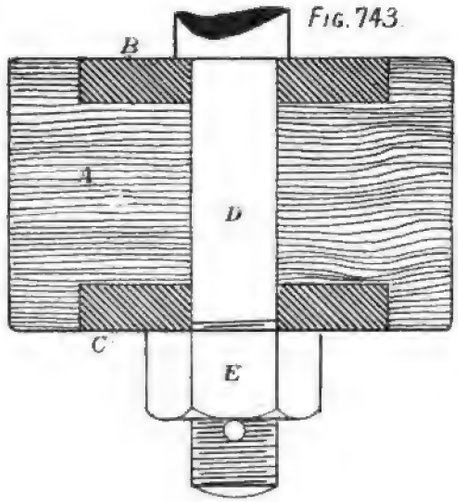

Fig. 747.

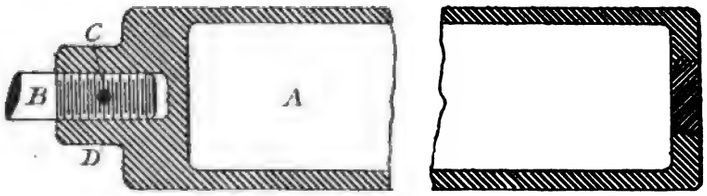

Fig. 744.

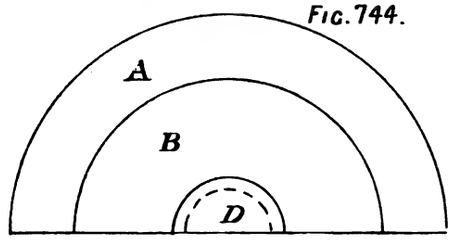

Fig. 748.

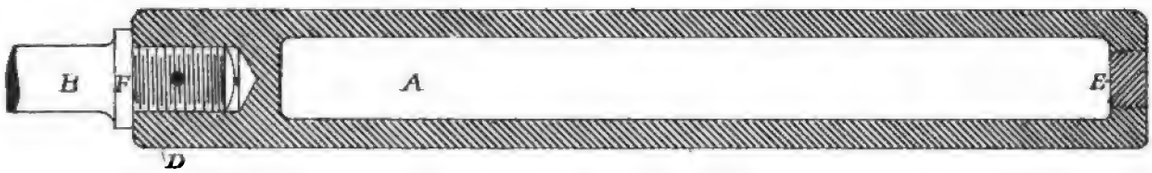

Fig 749

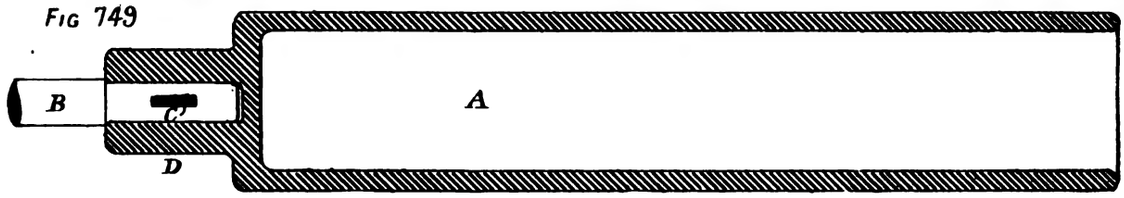

Fig. 750.

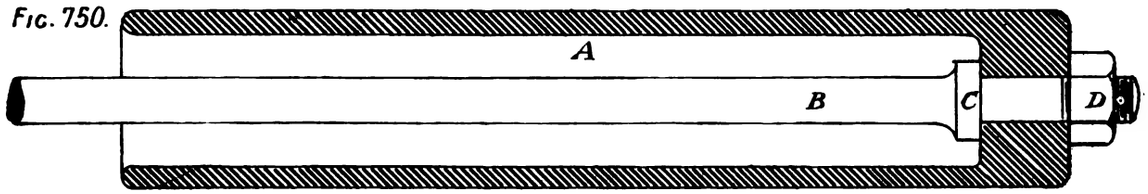

Fig. 751.

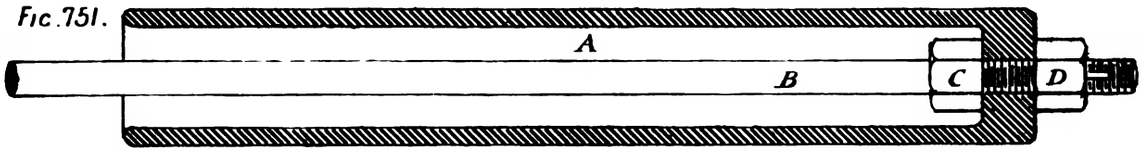

FIG. 752

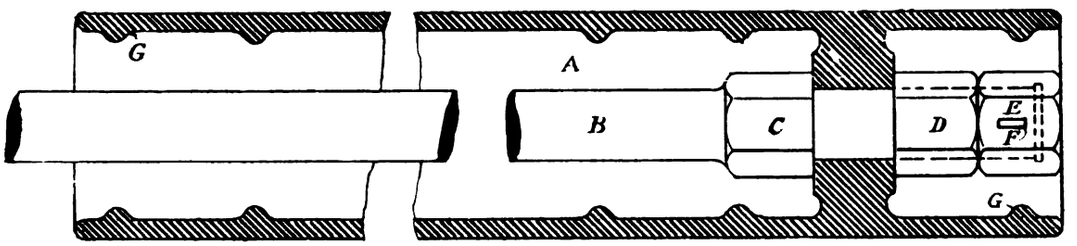

FIG. 753

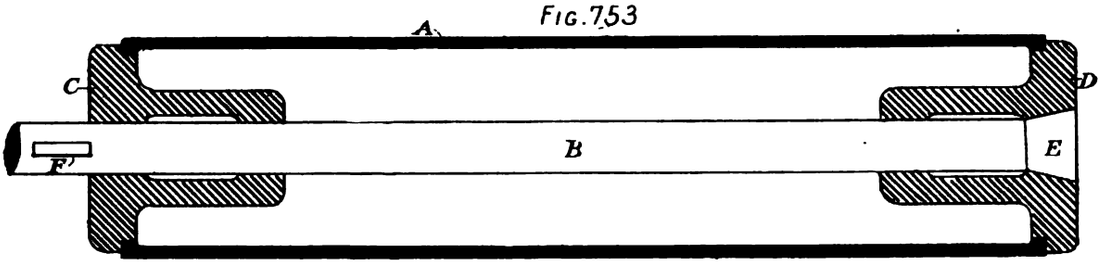

FIG. 754.

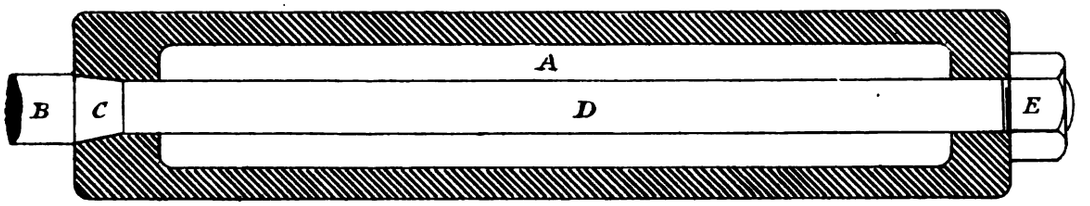

FIG. 755.

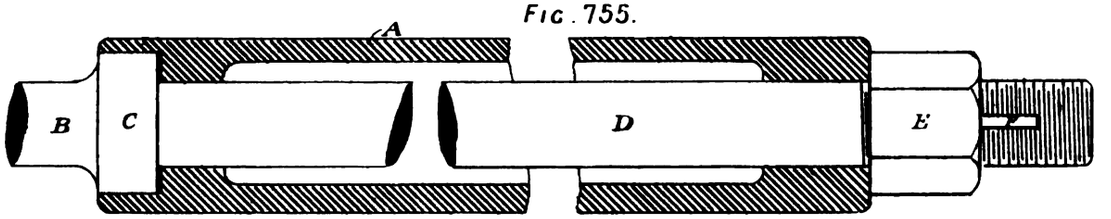

FIG. 756.

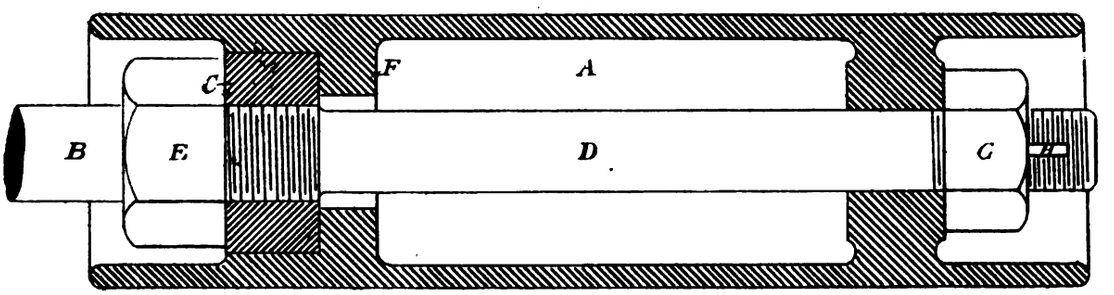

FIG. 759.

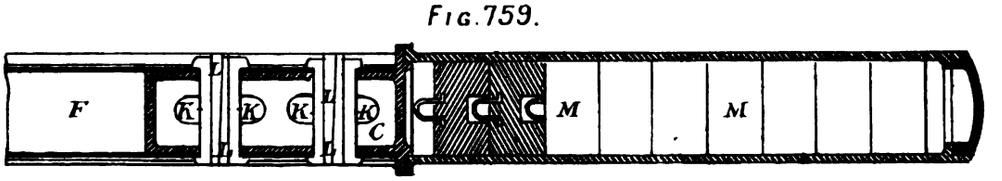

FIG. 757.

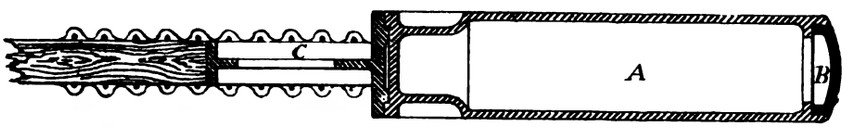

FIG. 758.

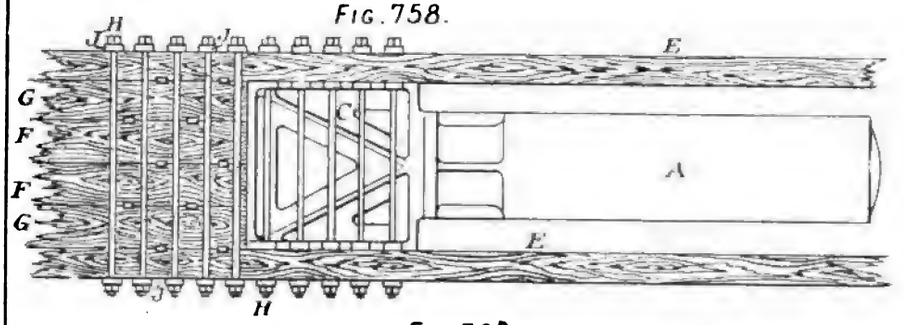

FIG. 760

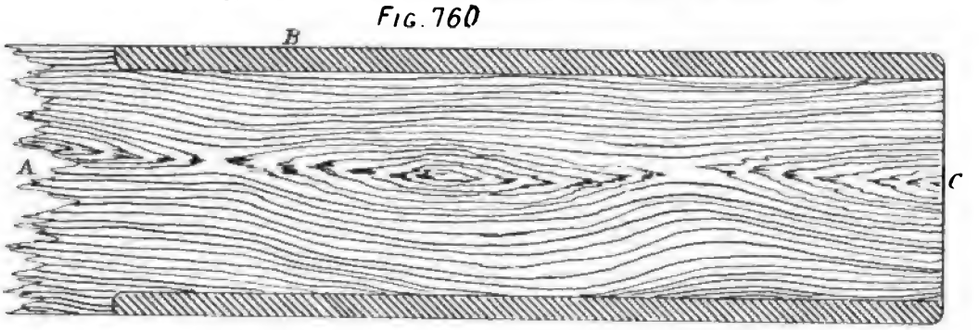

FIG. 761.

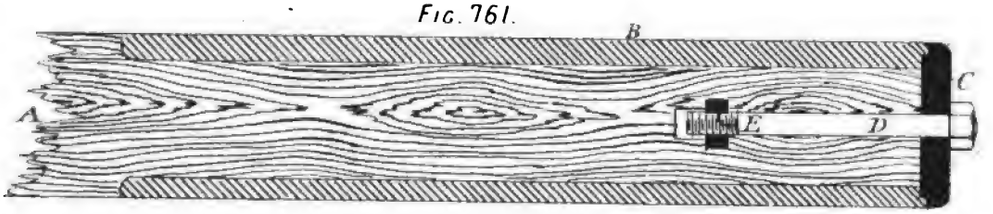

FIG. 762.

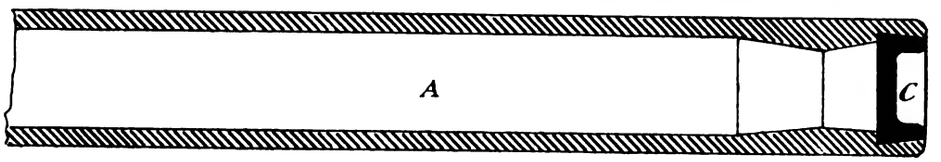

FIG. 764.

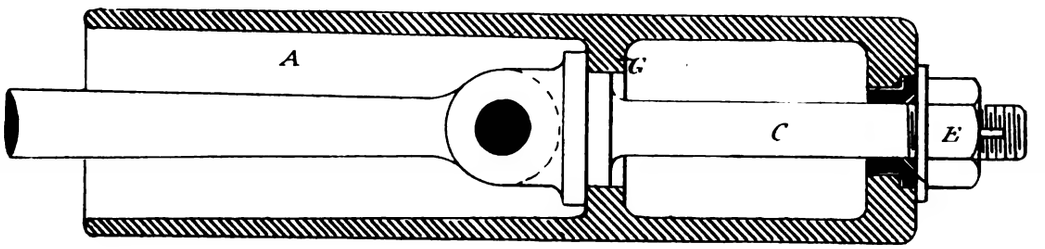

FIG. 763.

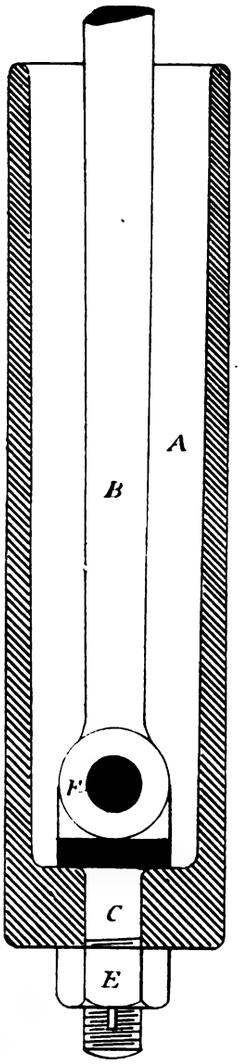

Fig. 765.

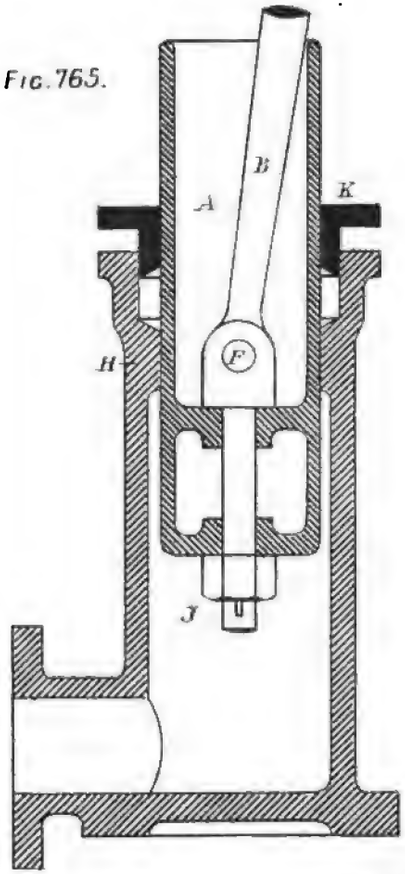

Fig. 766.

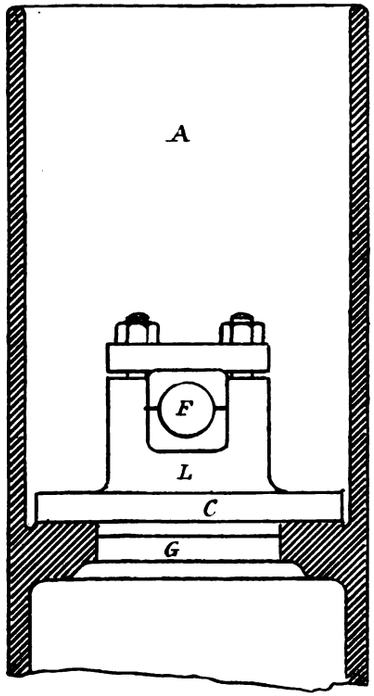

Fig. 767.

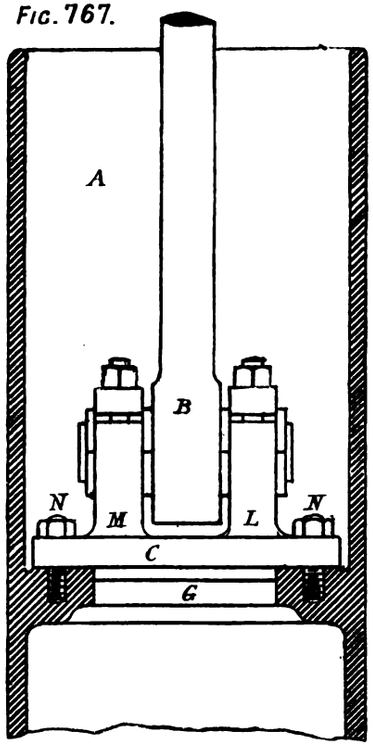

Fig. 768.

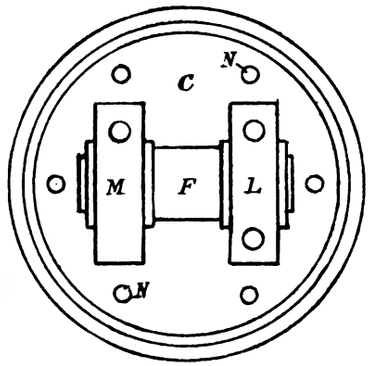

Fig. 769.

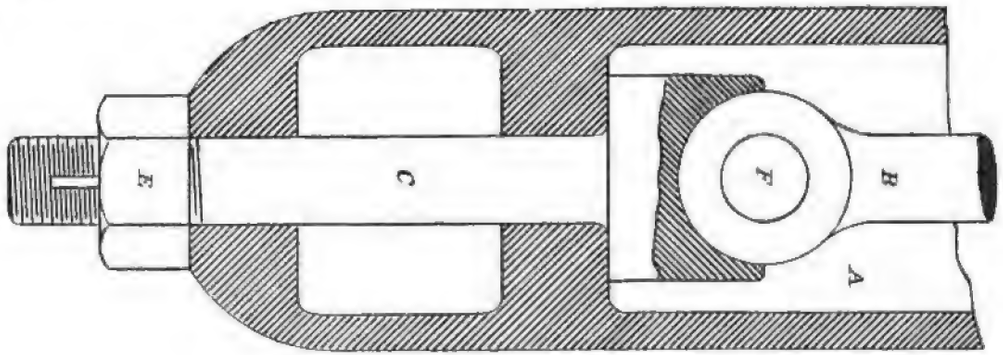

Plate CLVI.

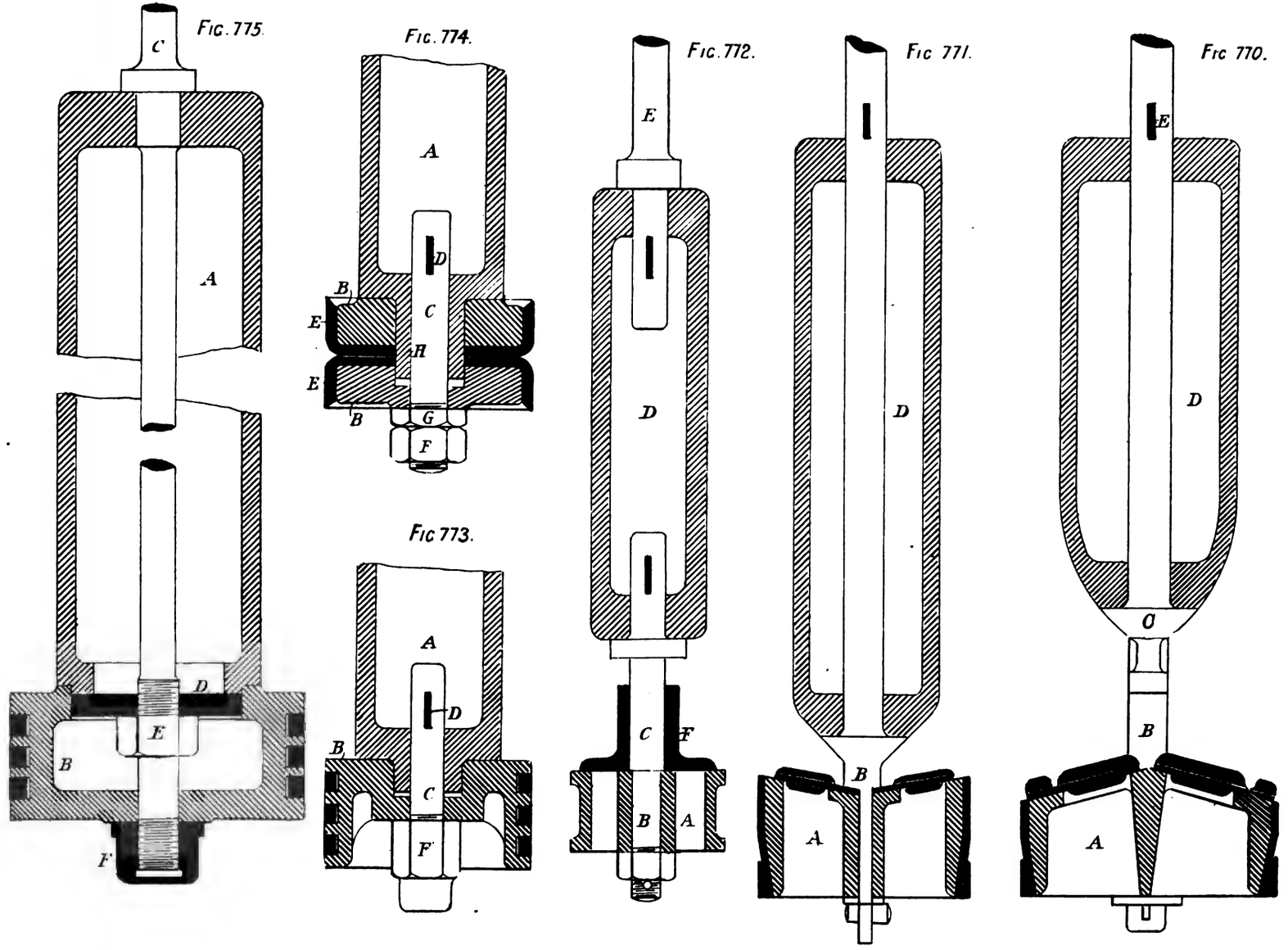
FIG. 775.
C
A
D
E
B
F
FIG. 774.
A
D
B
C
E
R
E
B
G
F
FIG 773.
A
D
B
C
F
FIG. 772.
E
D
C
F
B
A
FIG 771.
D
B
A
FIG 770.
E
D
C
B
A

Plate CLVII.

Plate CLVIII.

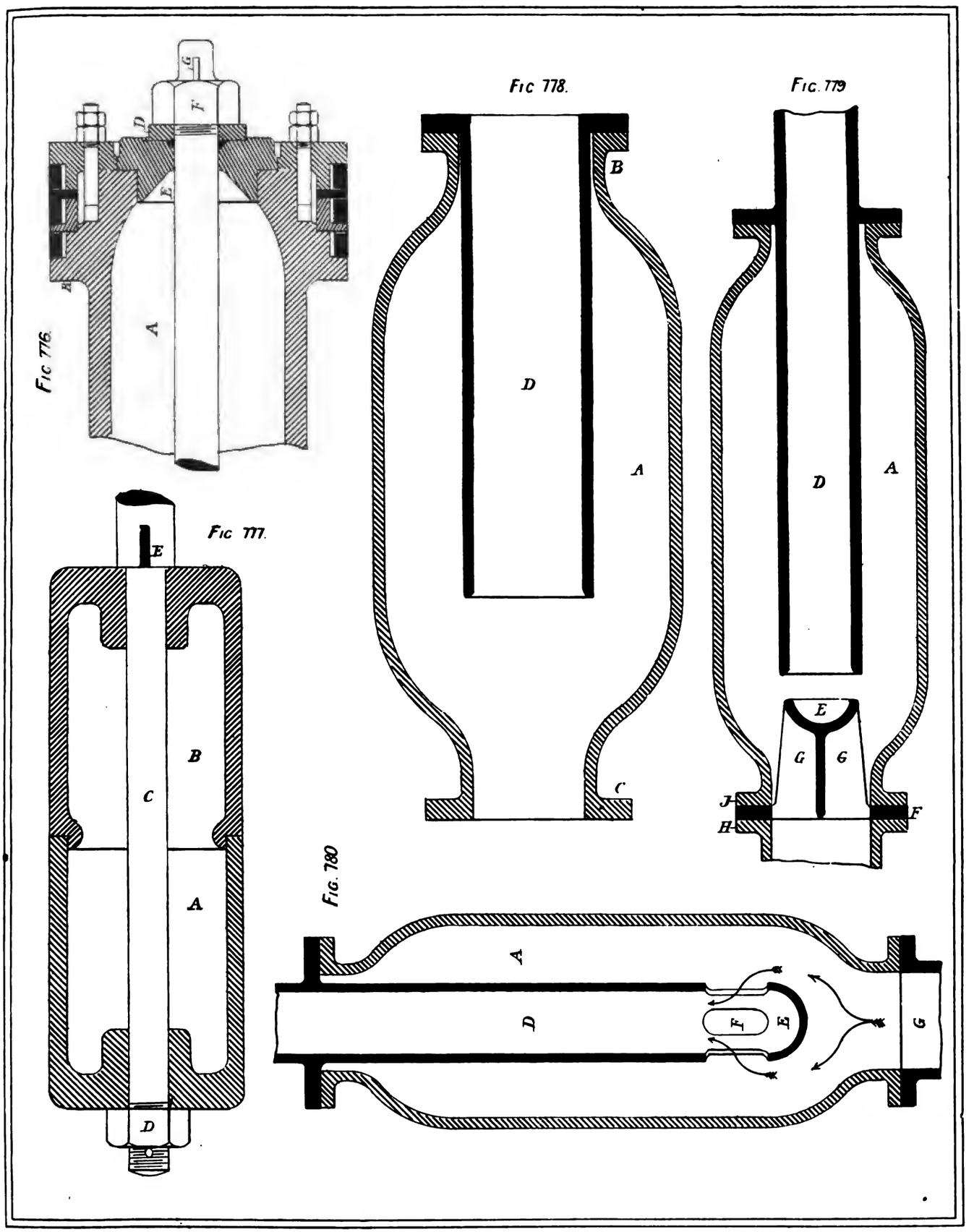

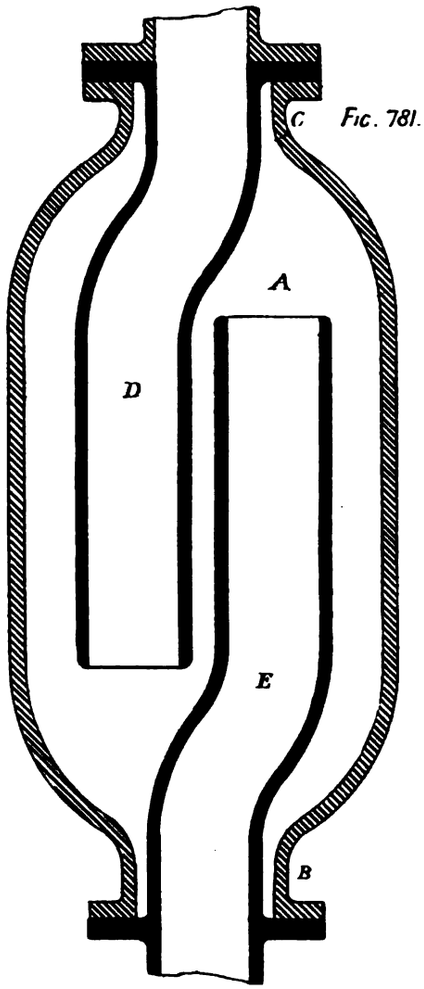

Fig. 781.

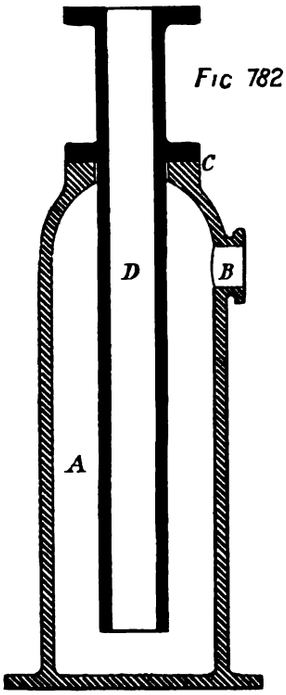

Fig 782.

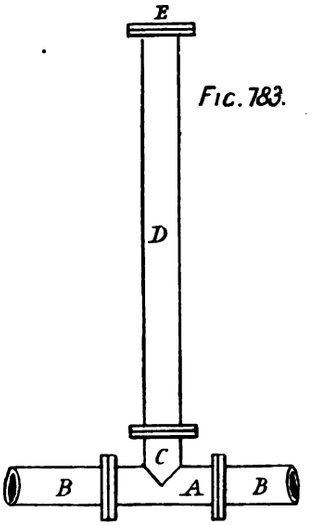

Fig. 783.

Fig. 785.

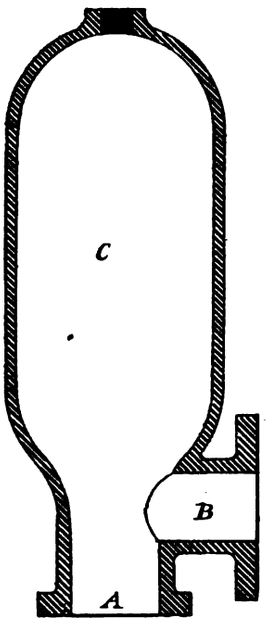

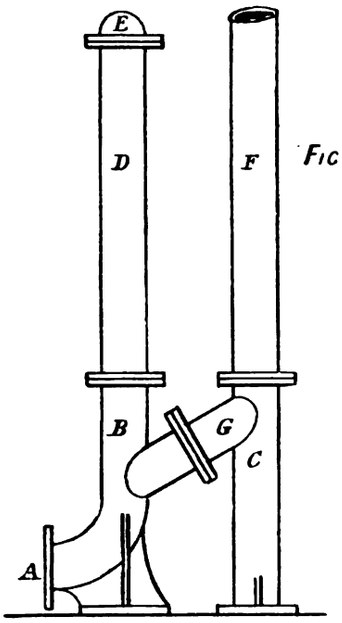

Fig 784.

Fig. 787.

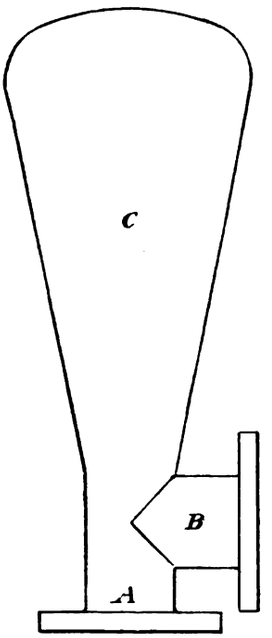

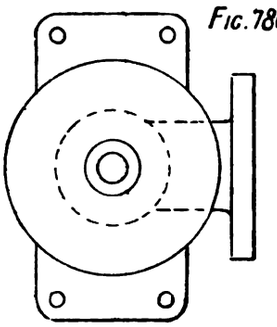

Fig. 786.

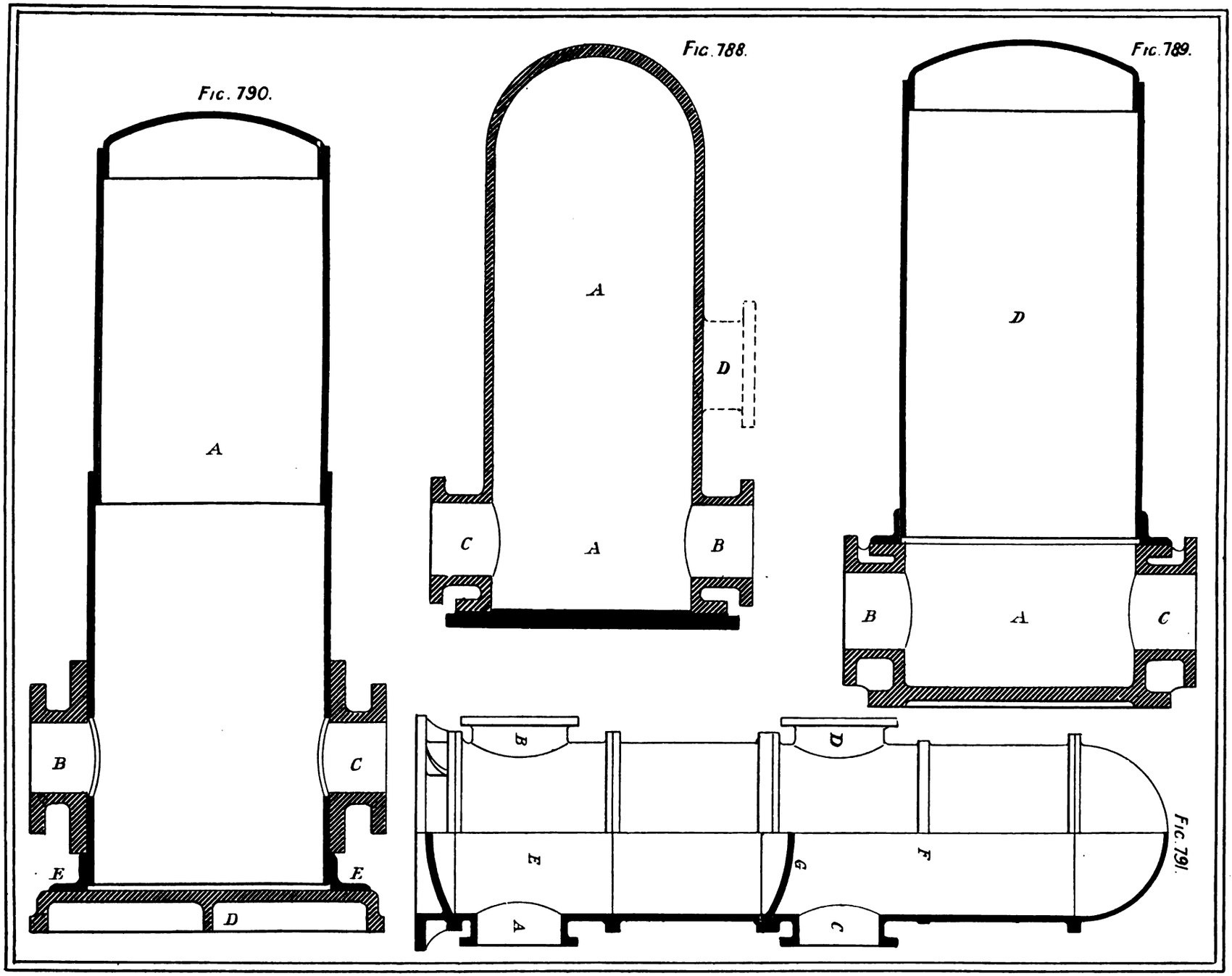

Plate CLX.

Fig. 792.

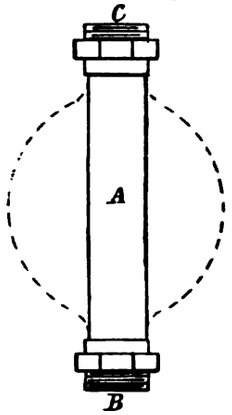

Fig. 793.

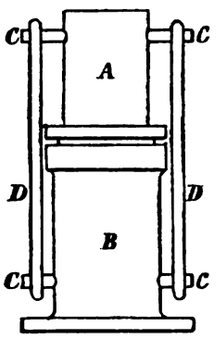

Fig. 794.

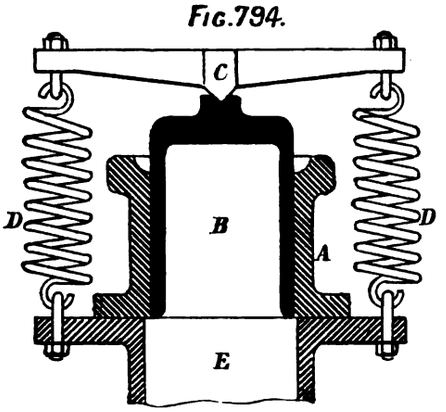

Fig. 795.

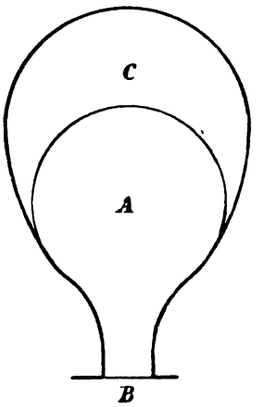

Fig. 798.

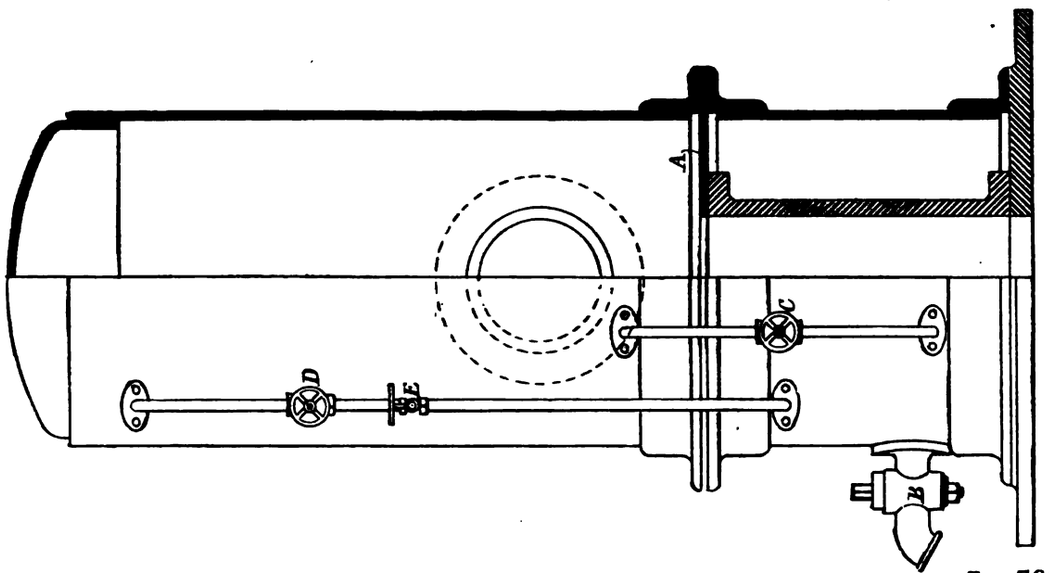

Fig. 796.

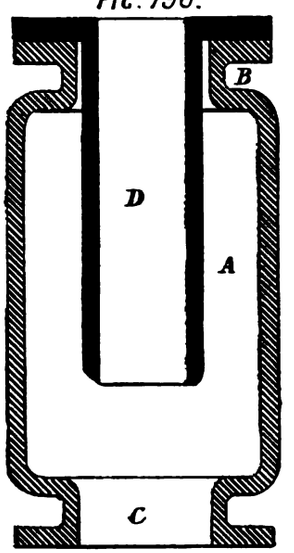

Fig. 797.

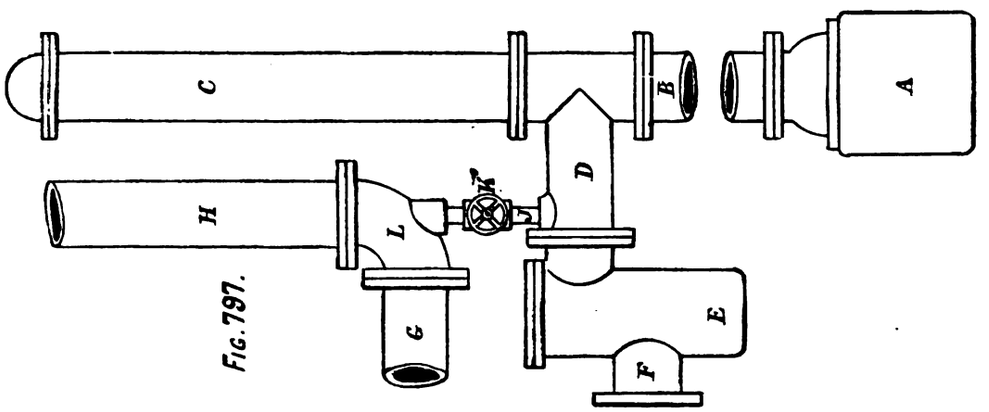

Fig. 800.

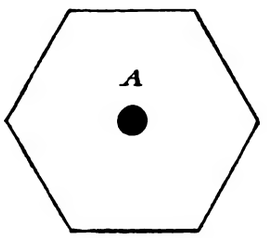

Fig. 799.

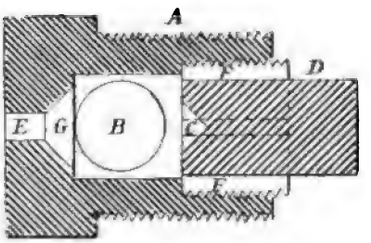

Fig 801.

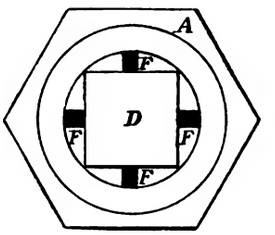

Fig. 803.

Fig. 802.

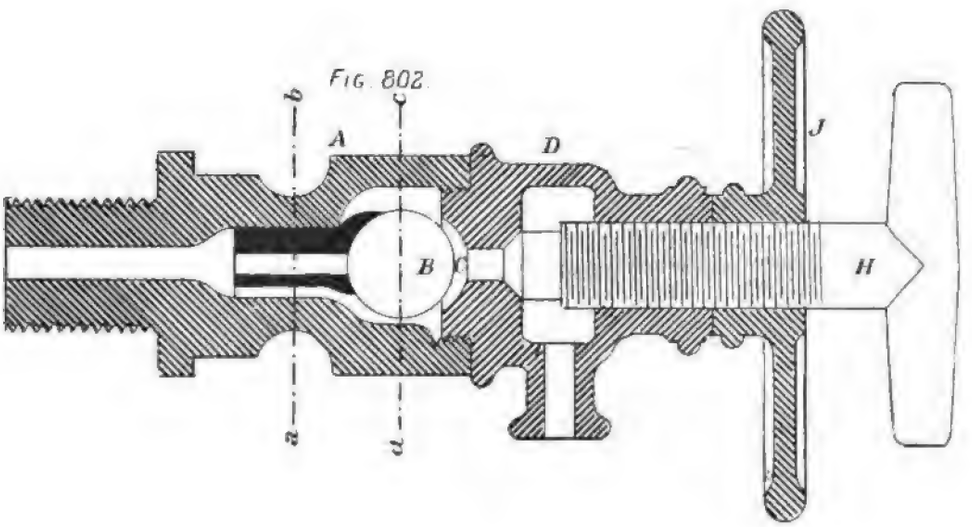

Fig. 804.

Fig. 805.

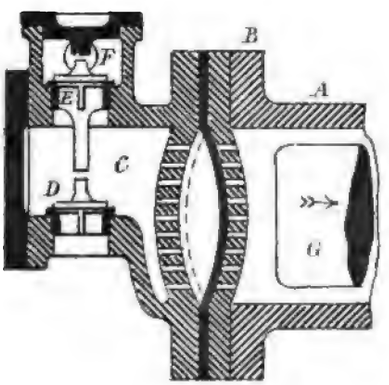

Fig 806.

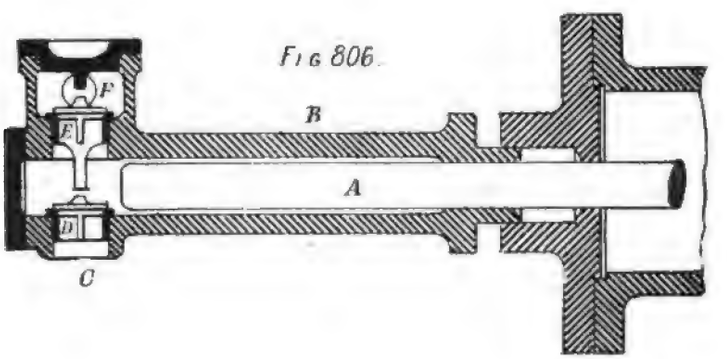

Fig. 807.

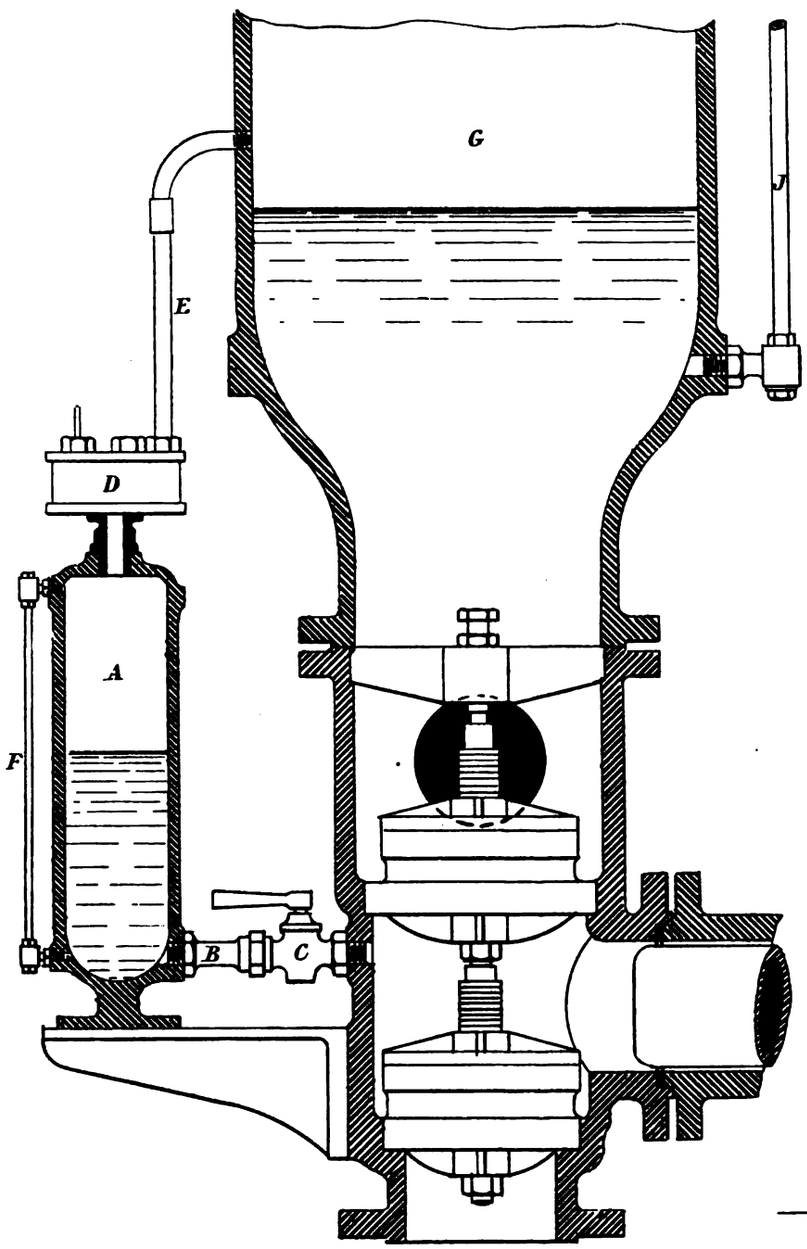

Fig. 808.

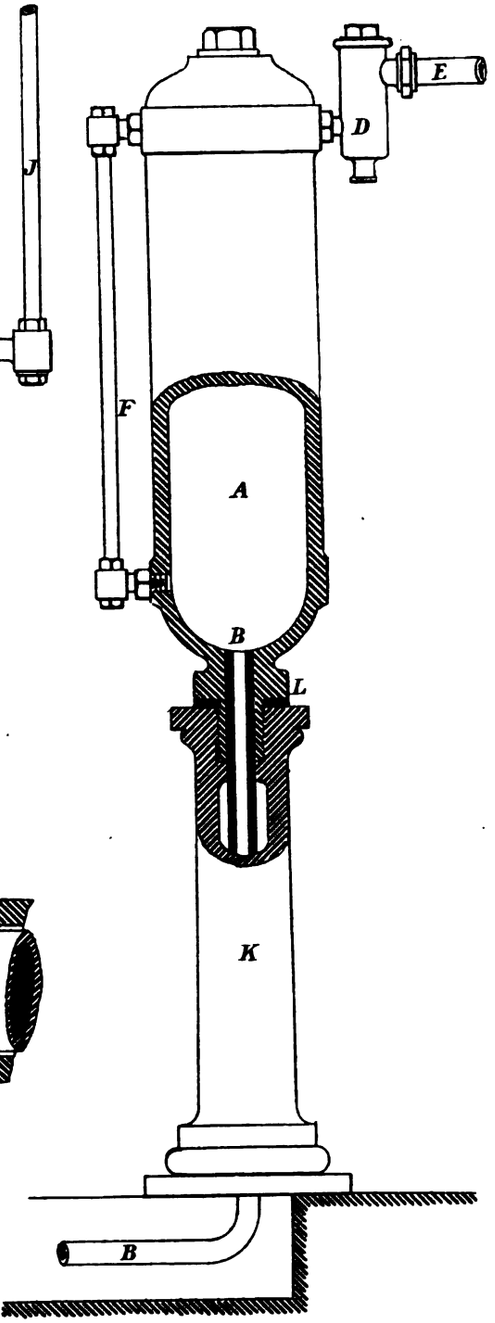

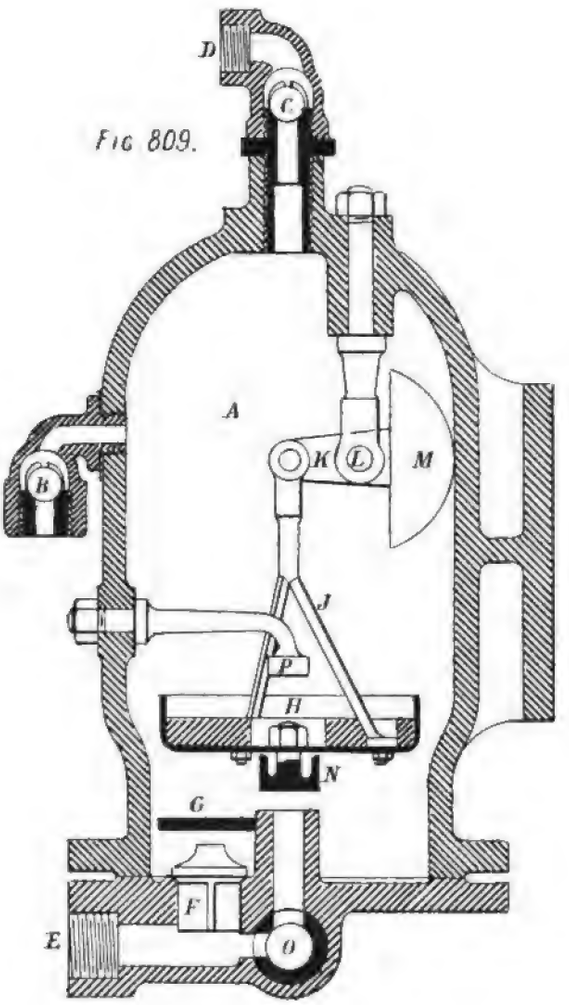

Fig. 809.

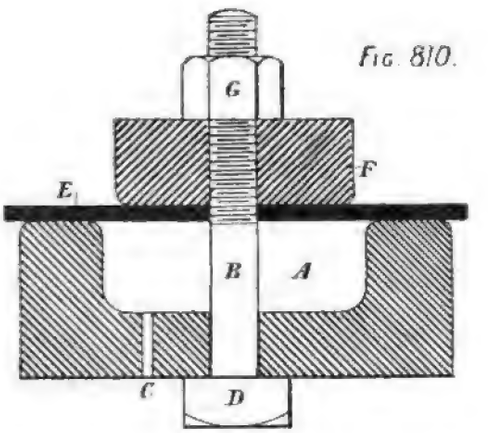

Fig. 810.

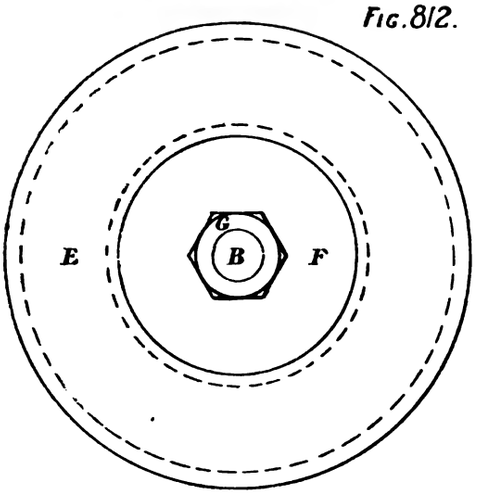

Fig. 812.

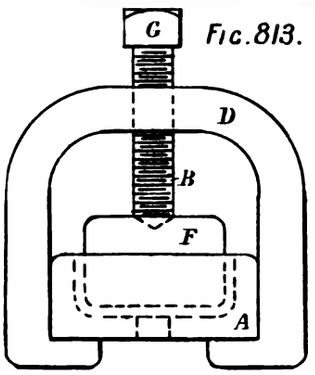

Fig. 813.

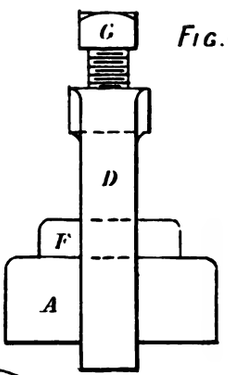

Fig. 814.

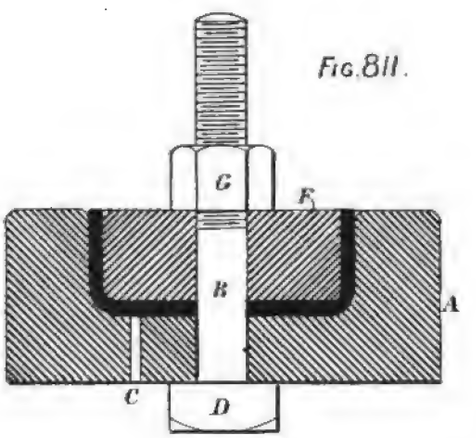

Fig. 811.

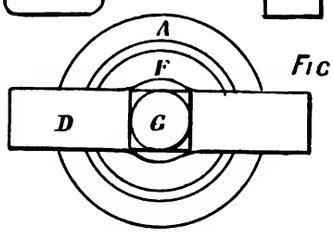

Fig. 815.

Fig. 818.

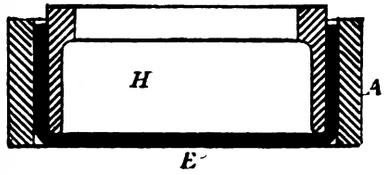

Fig. 819.

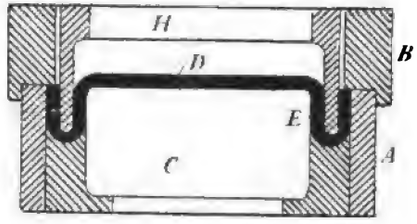

Fig. 820.

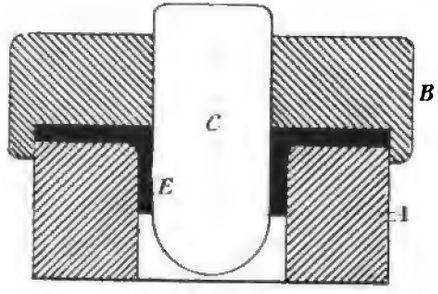

Fig. 816.

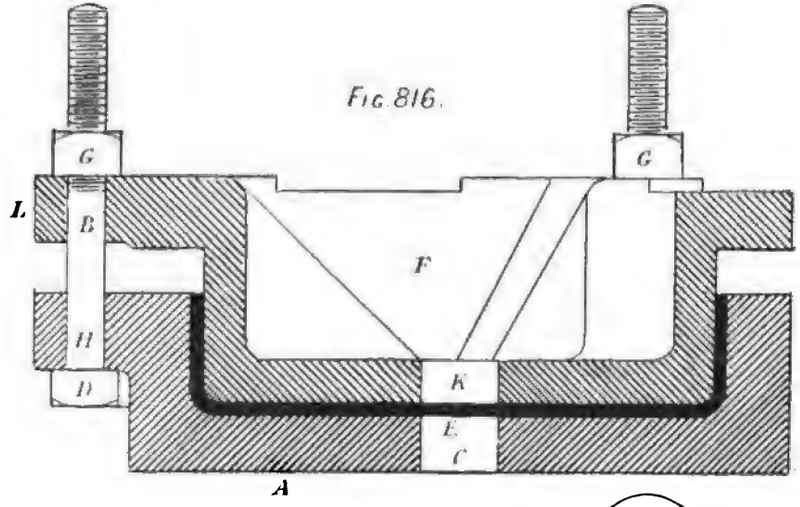

Fig. 817.

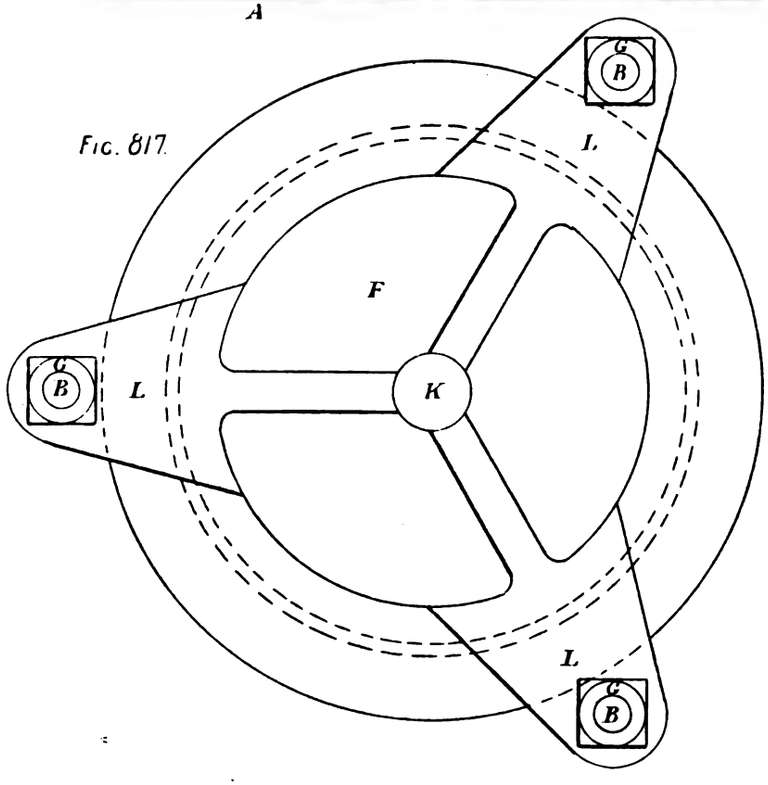

Plate CLXV.

Fig. 822.

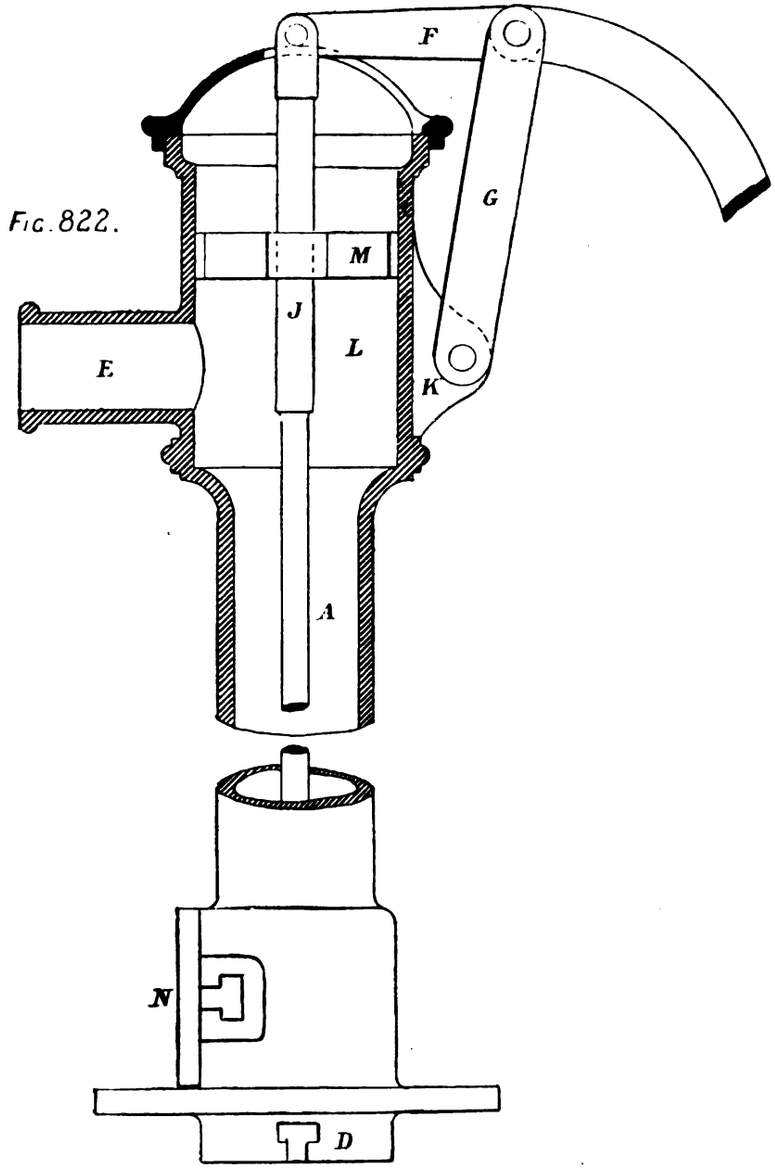

Fig. 821.

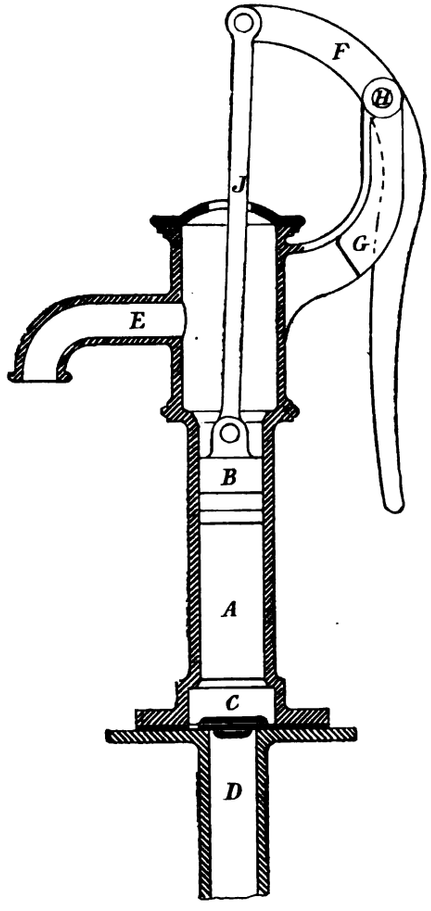

Plate CLXVI.

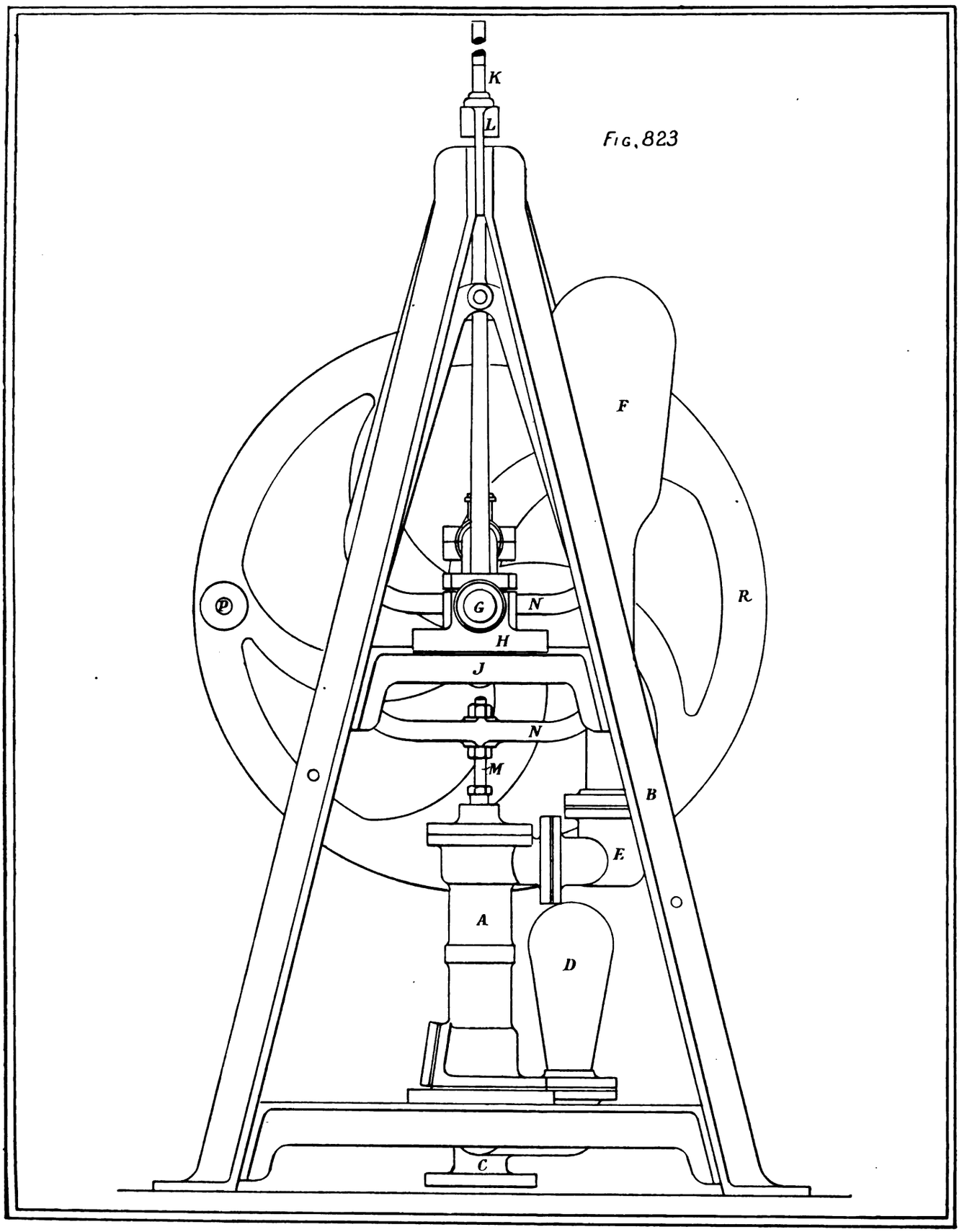

Fig. 823

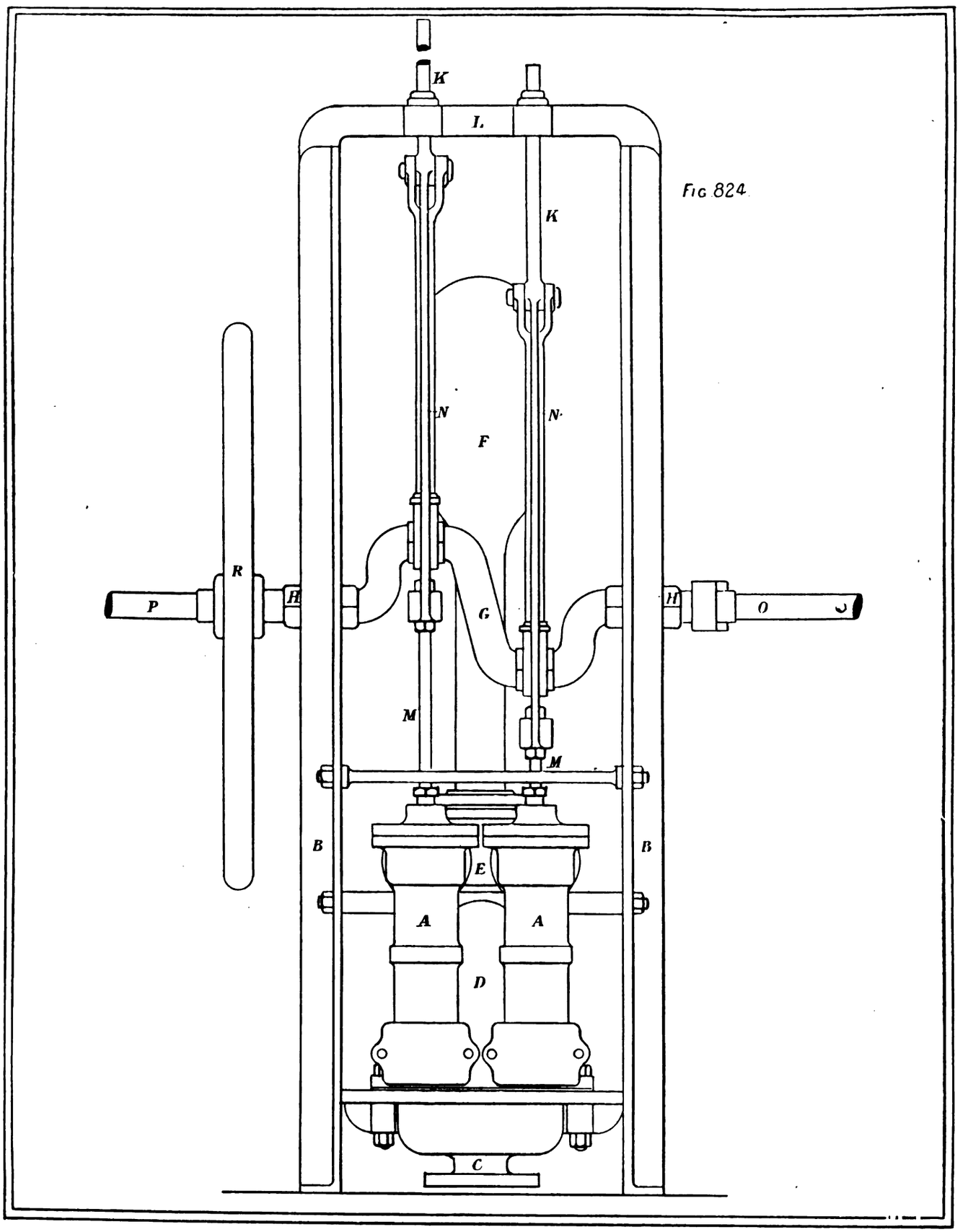

Fig 824

Fig. 825.

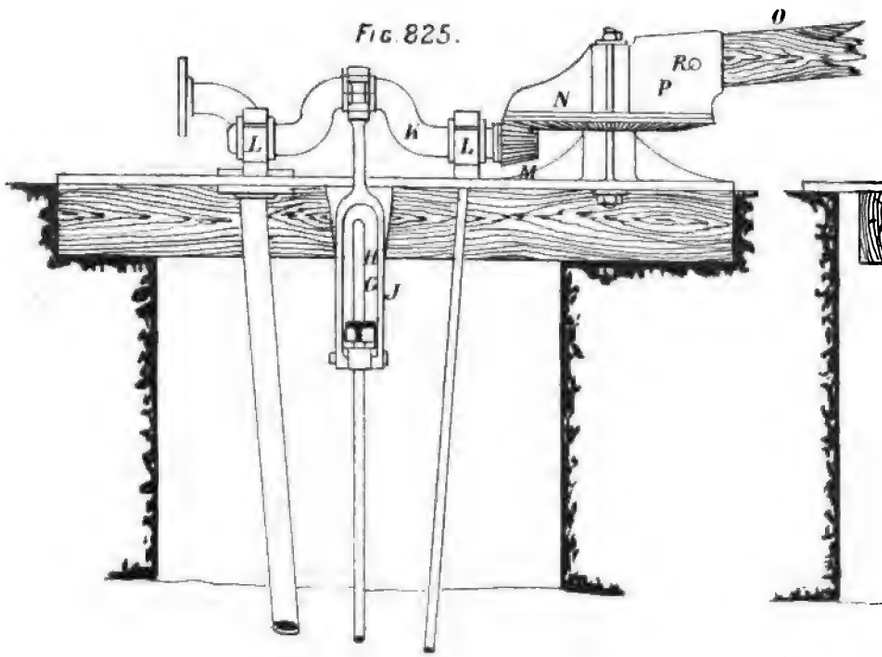

Fig. 826.

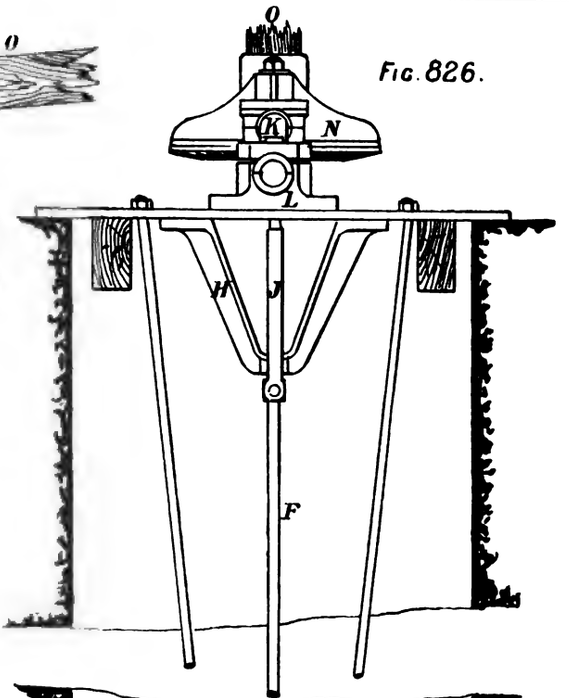

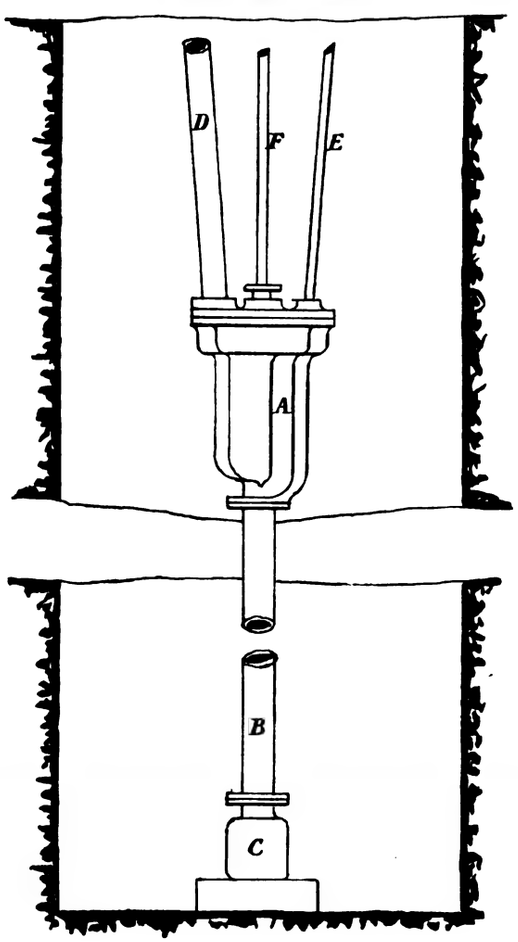

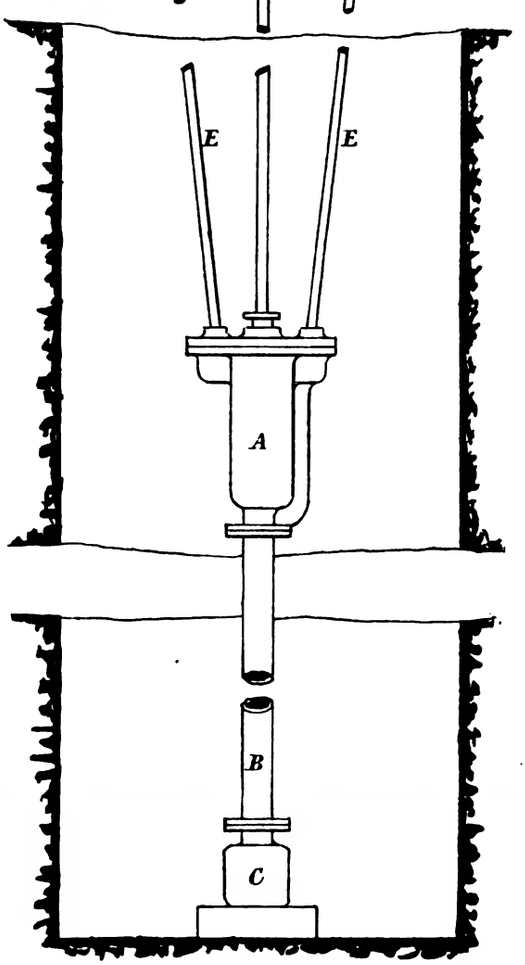

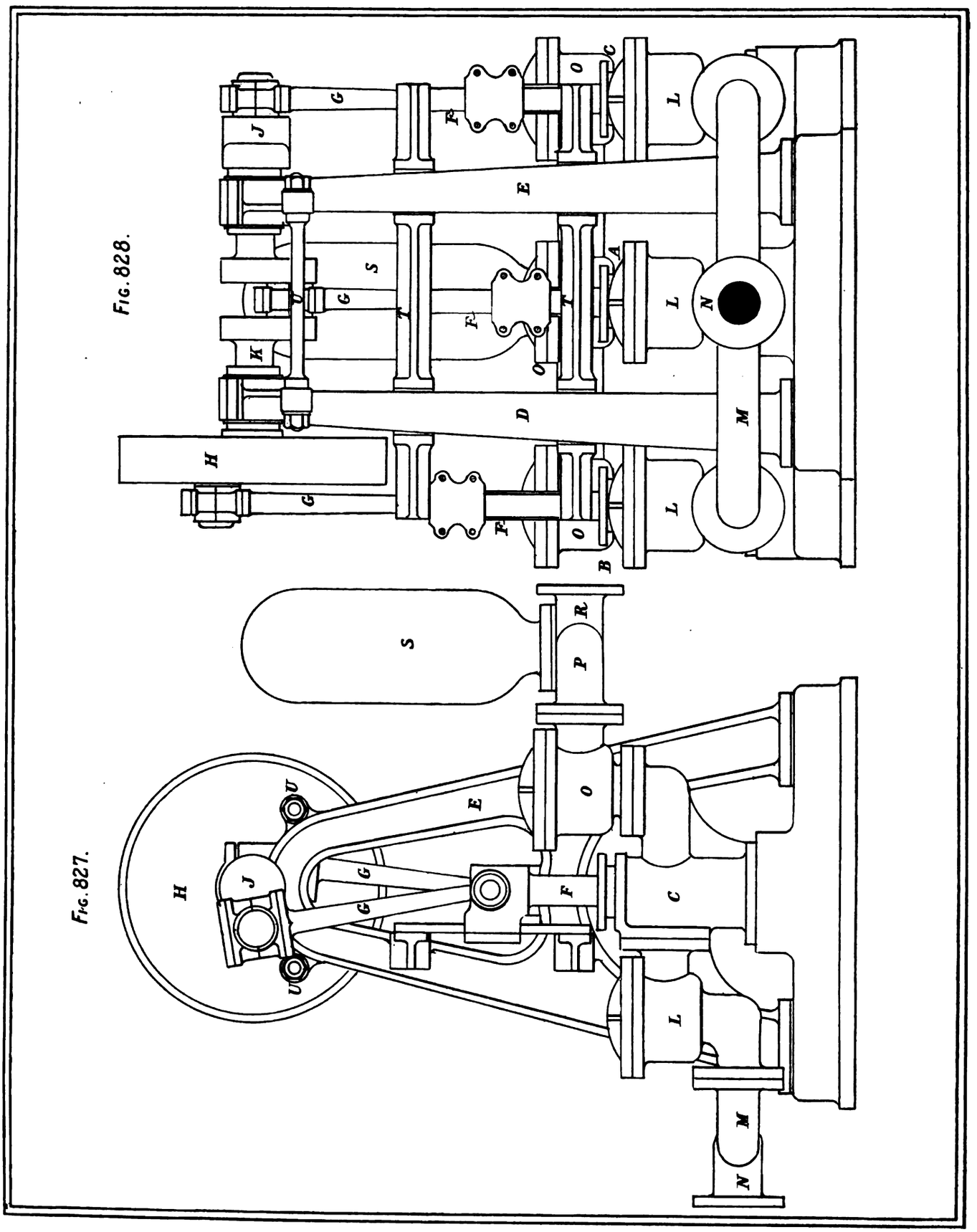
Fig. 828.
Fig. 827.
A
B
C
D
E
F
G
H
J
K
L
M
N
O
P
R
S
T
U

Plate CLXXI.

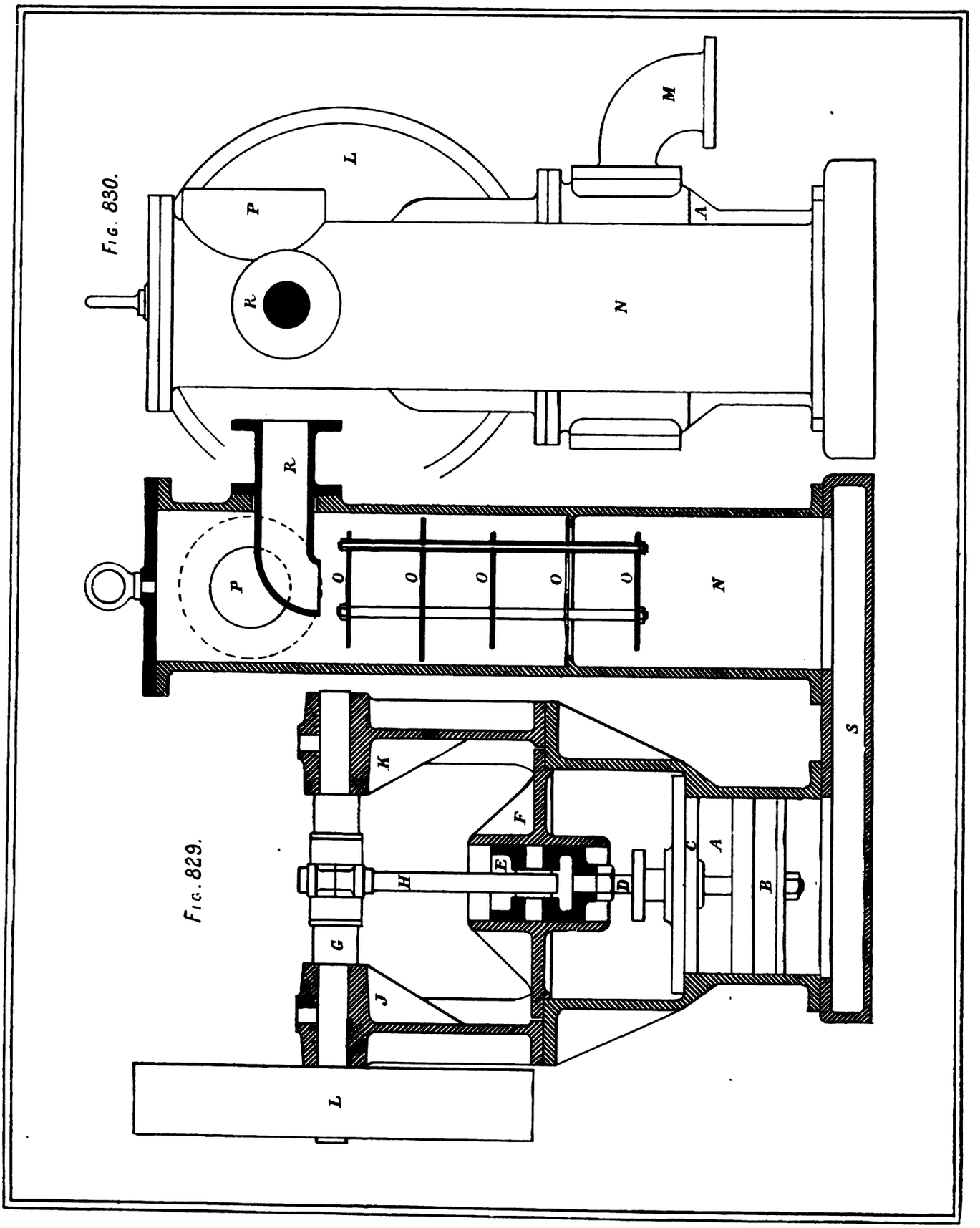

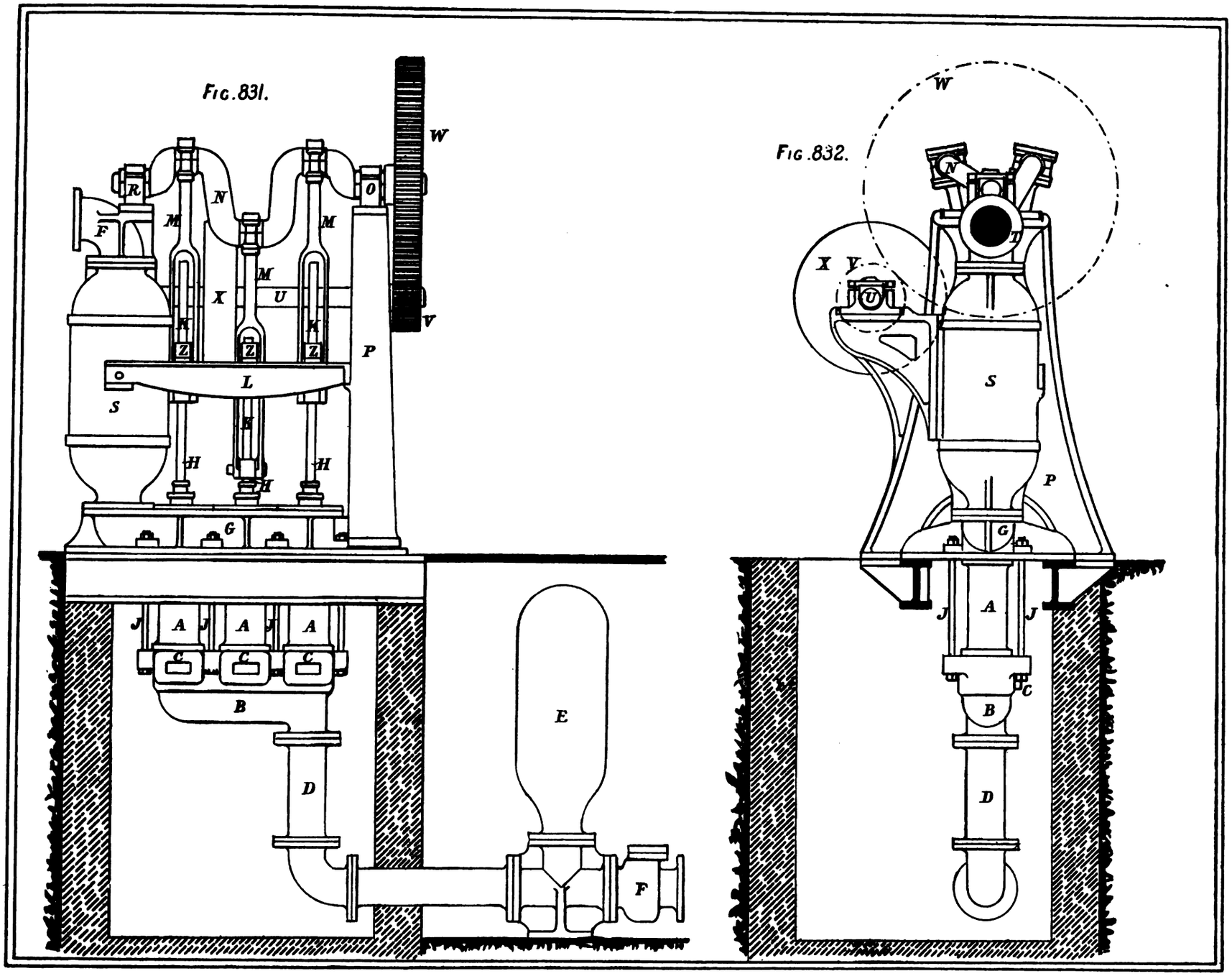

Plate CLXXII.

Fig 845

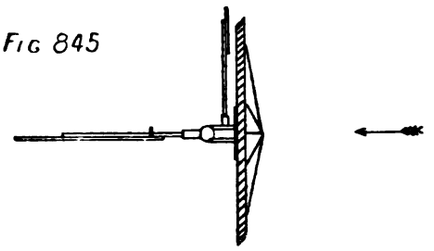

Fig 846.

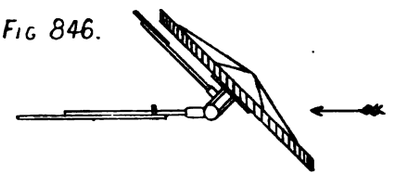

Fig 847

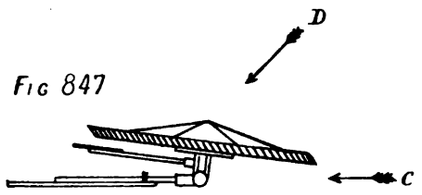

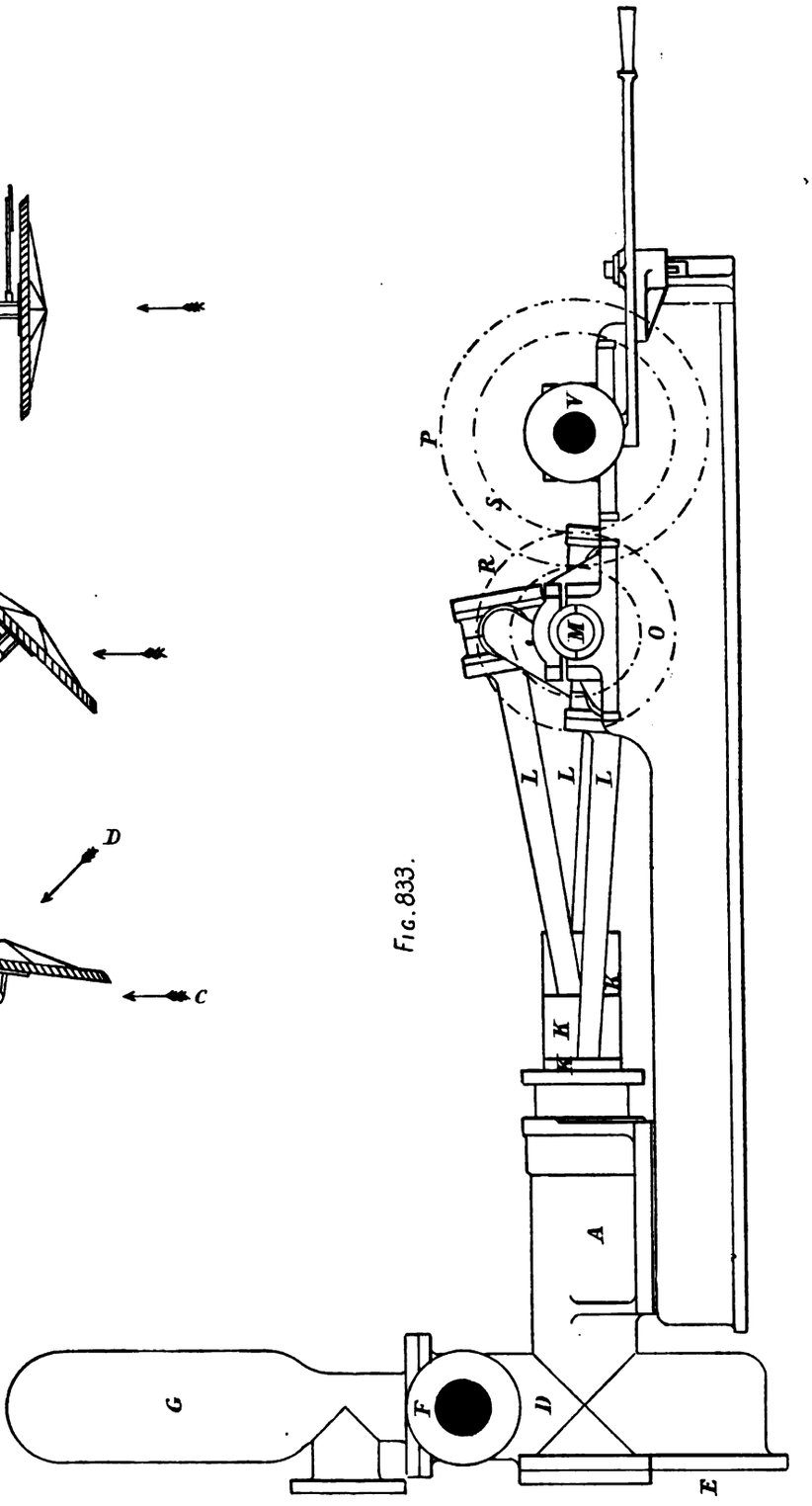

Fig.833.

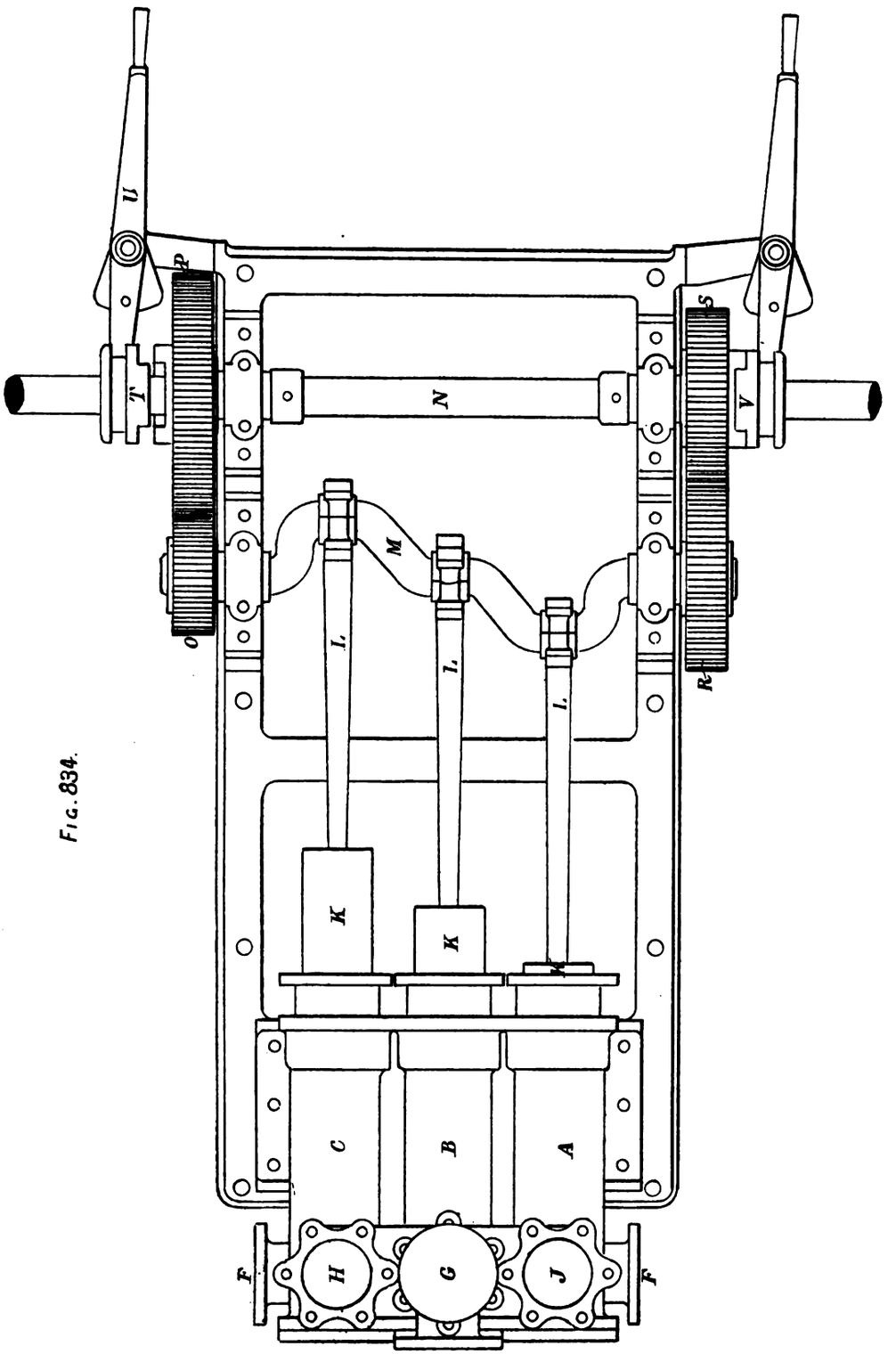

Fig. 834.

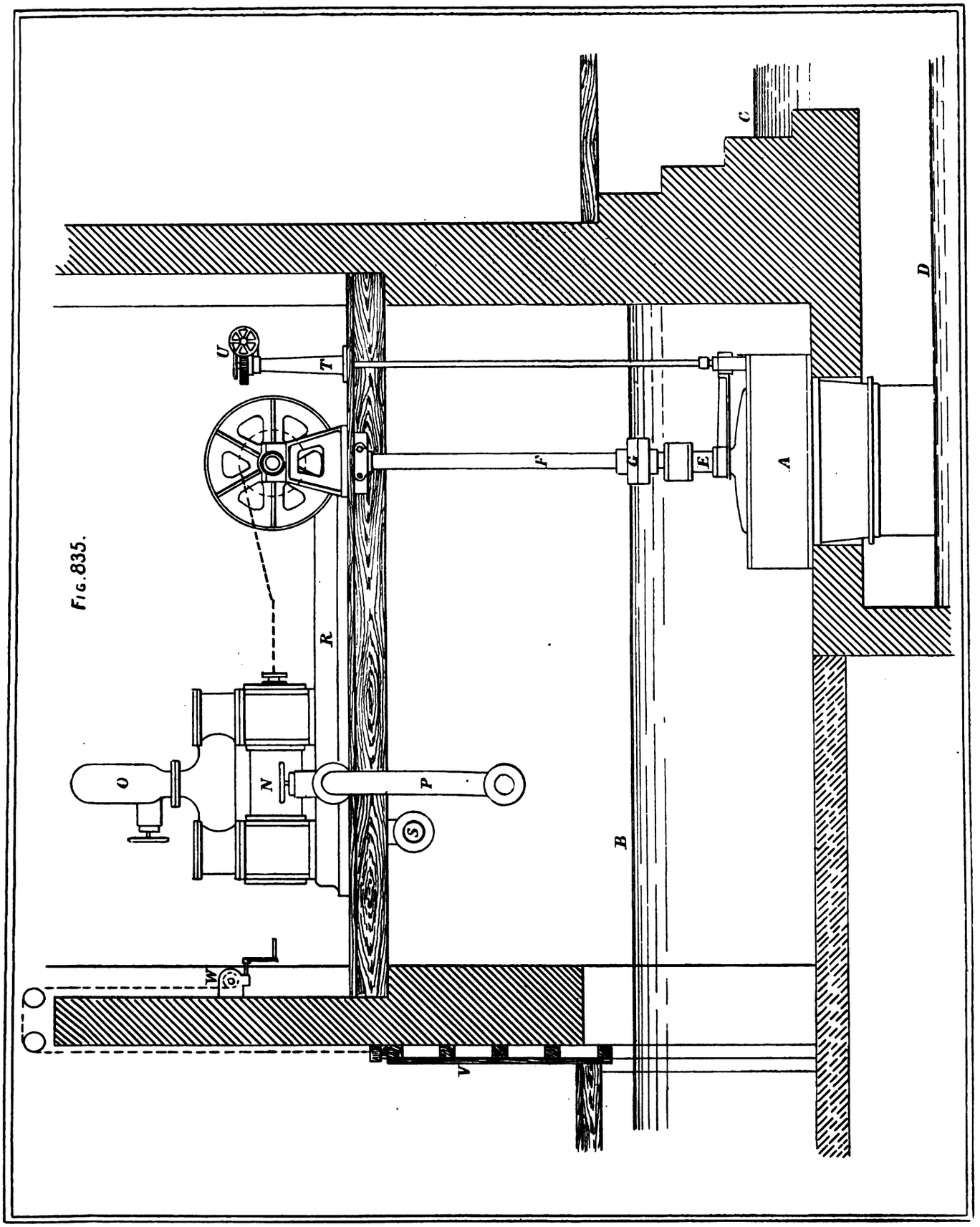

FIG. 835.

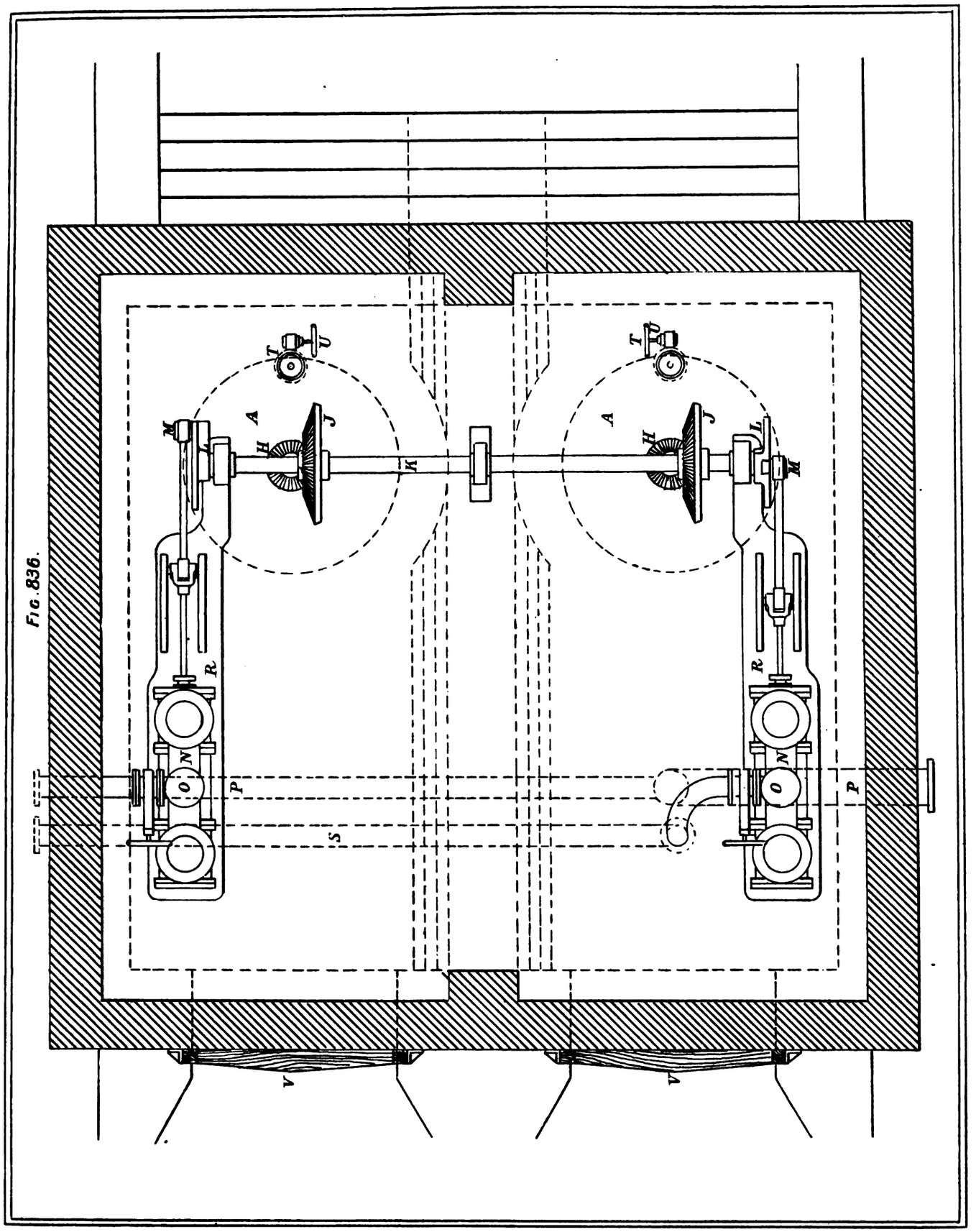

Fig. 836.

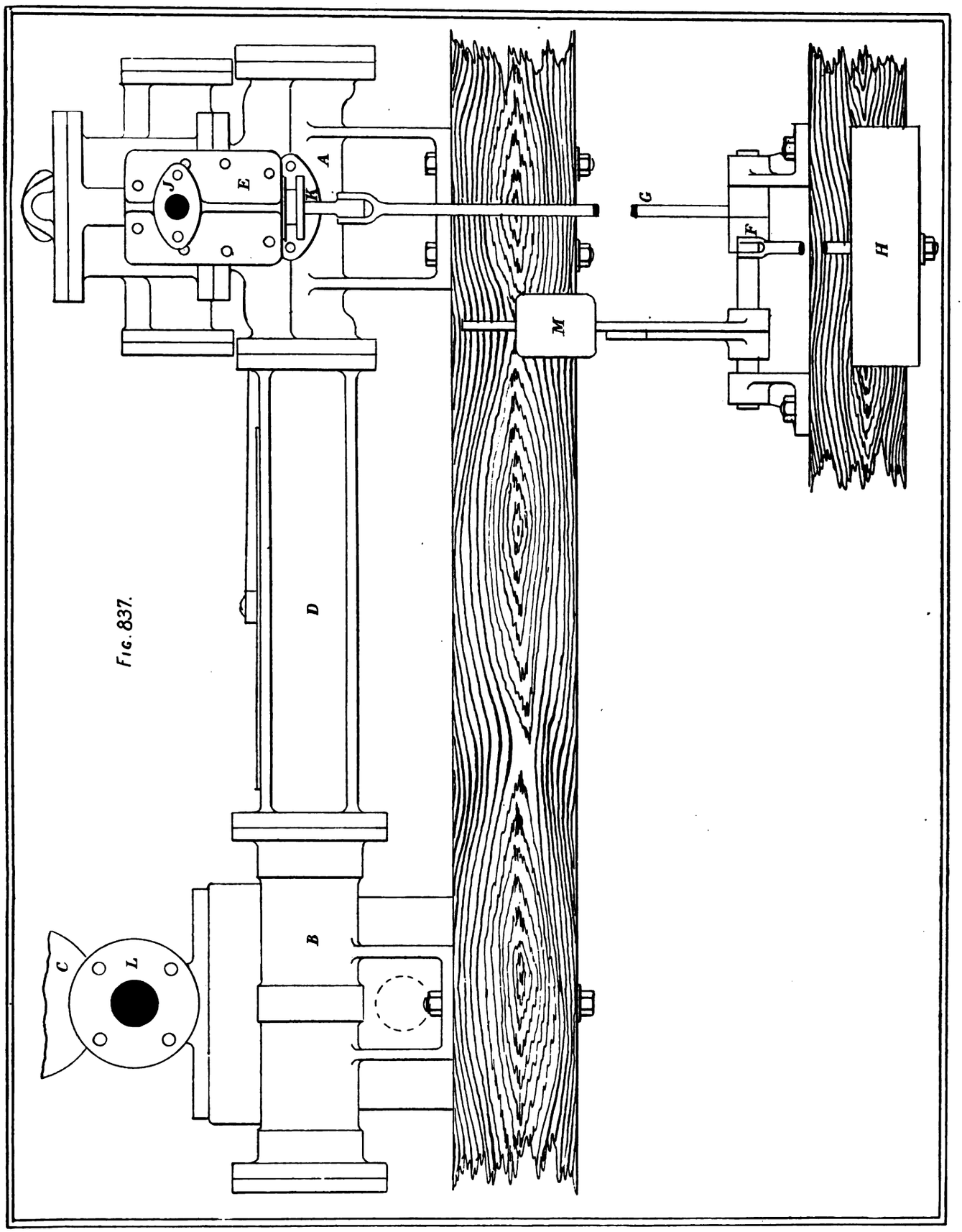

FIG. 837.

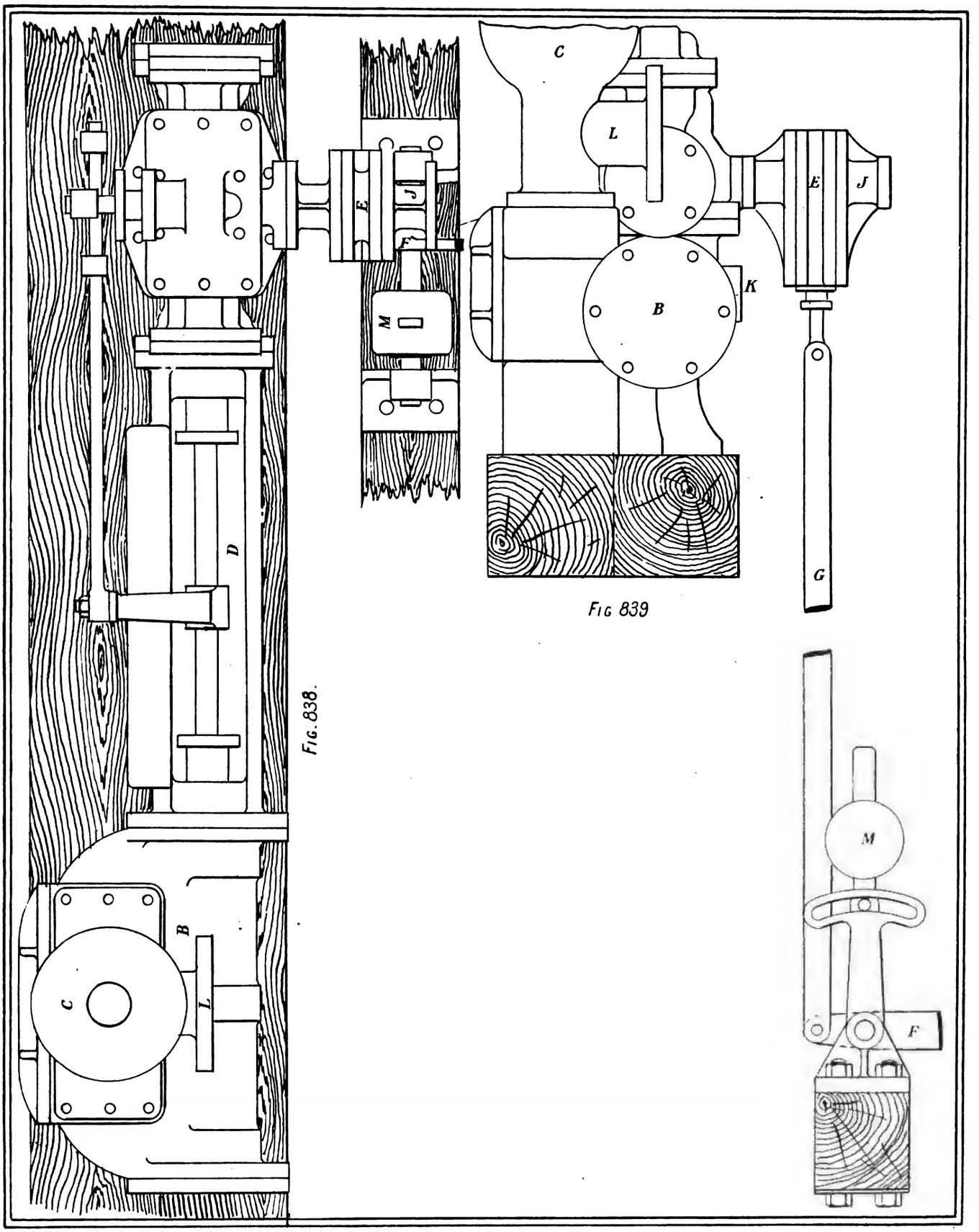

FIG. 838.

FIG 839

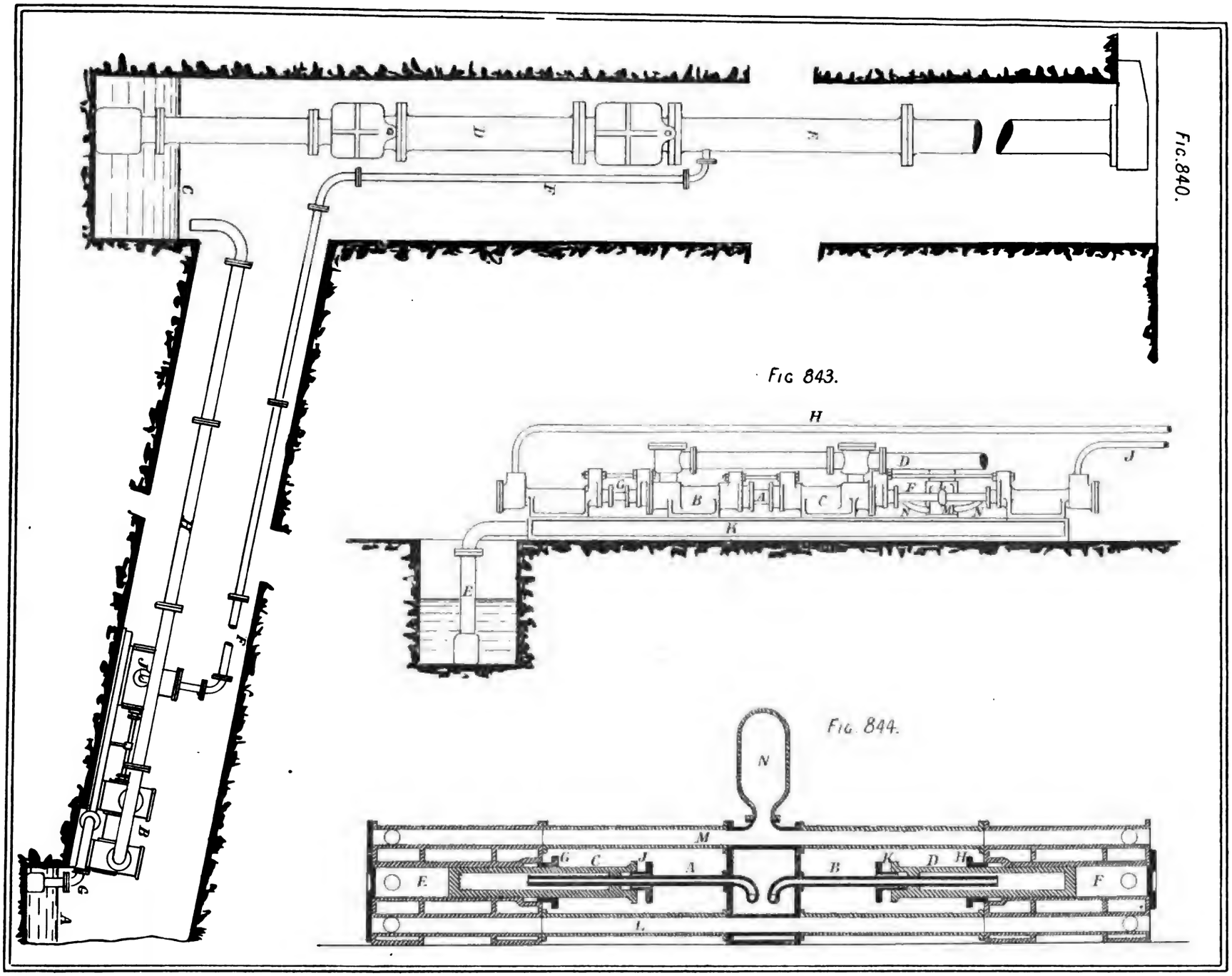

Fig.840.

Fig 843.

Fig. 844.

Plate CLXXIX.

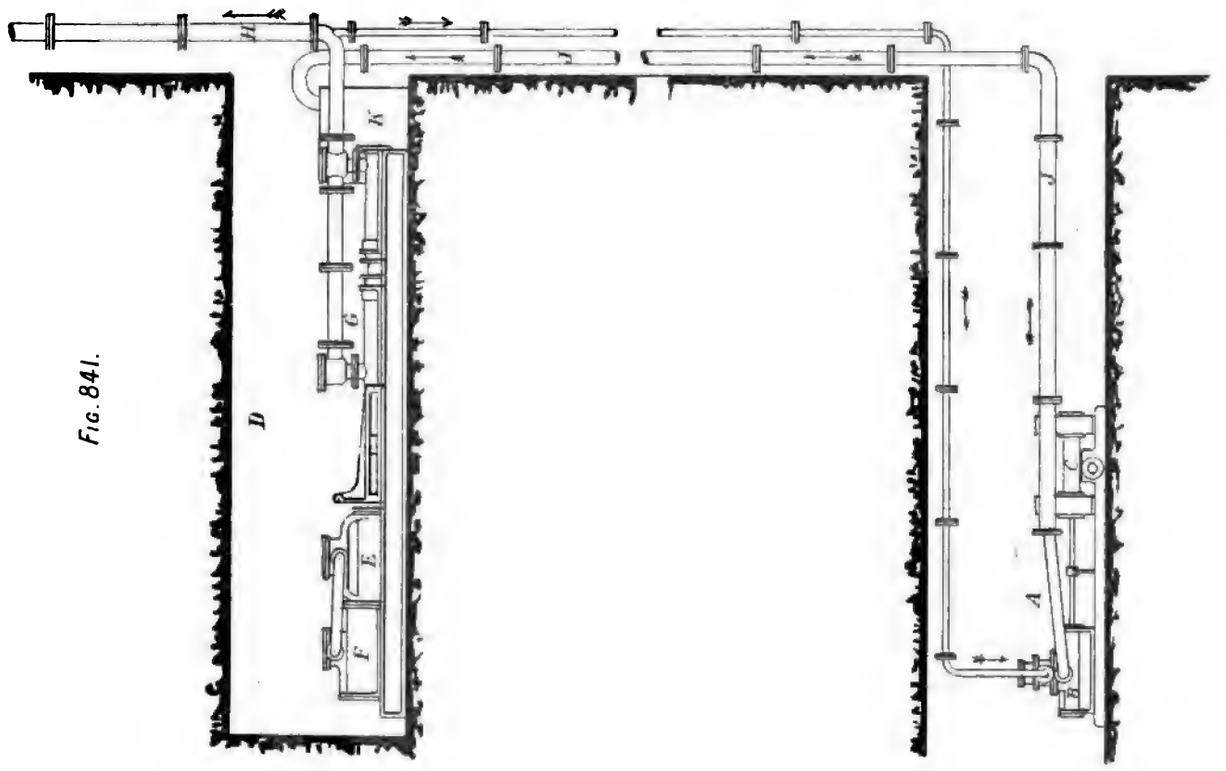

Fig. 841.

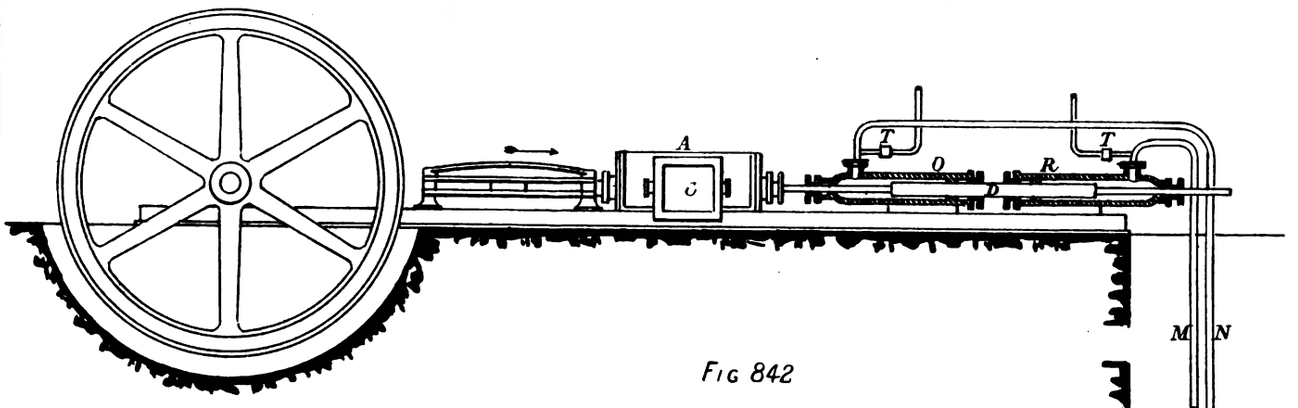

Fig 842

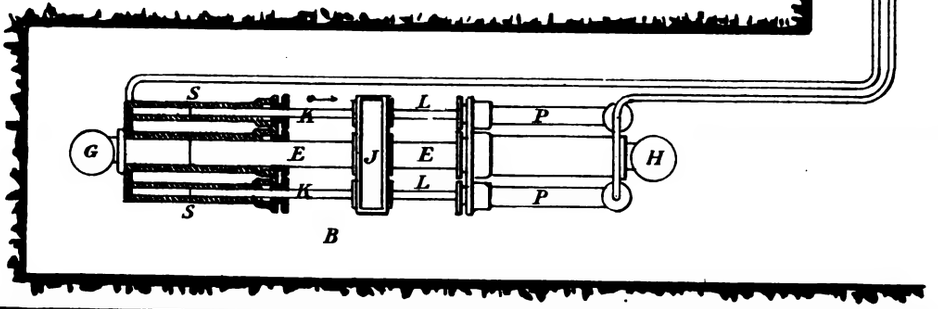

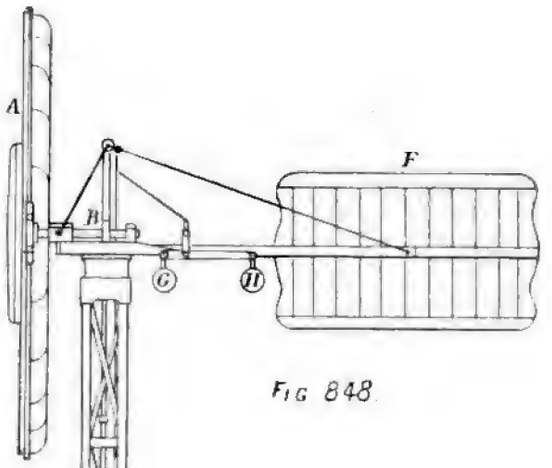

Fig 848.

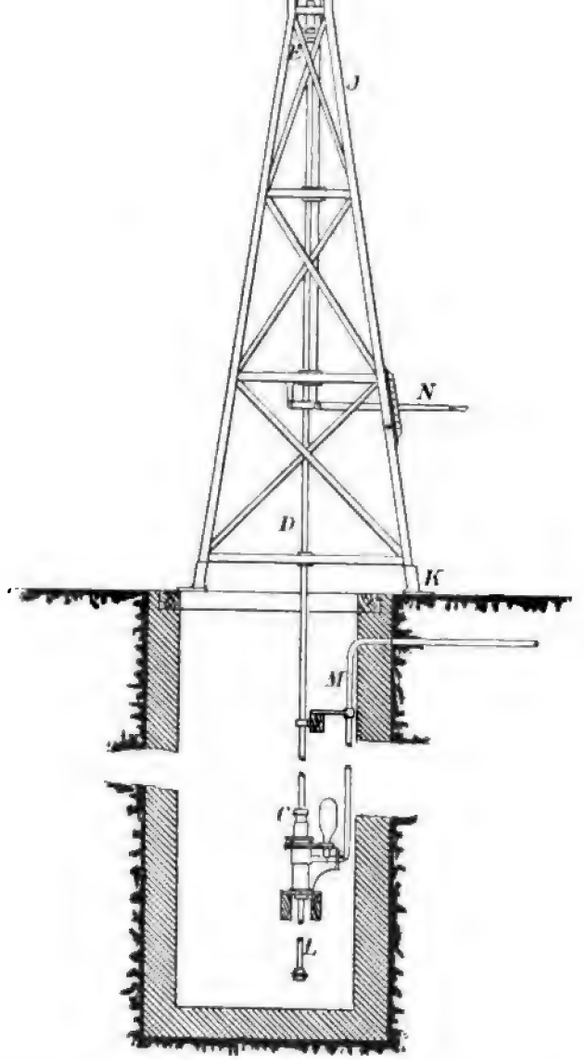

Fig 852.

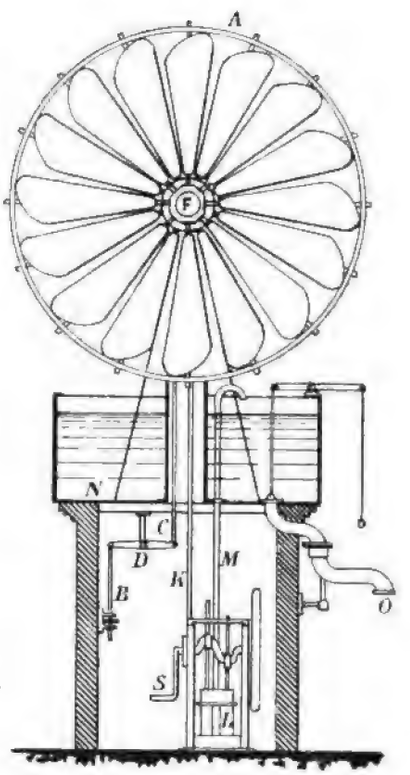

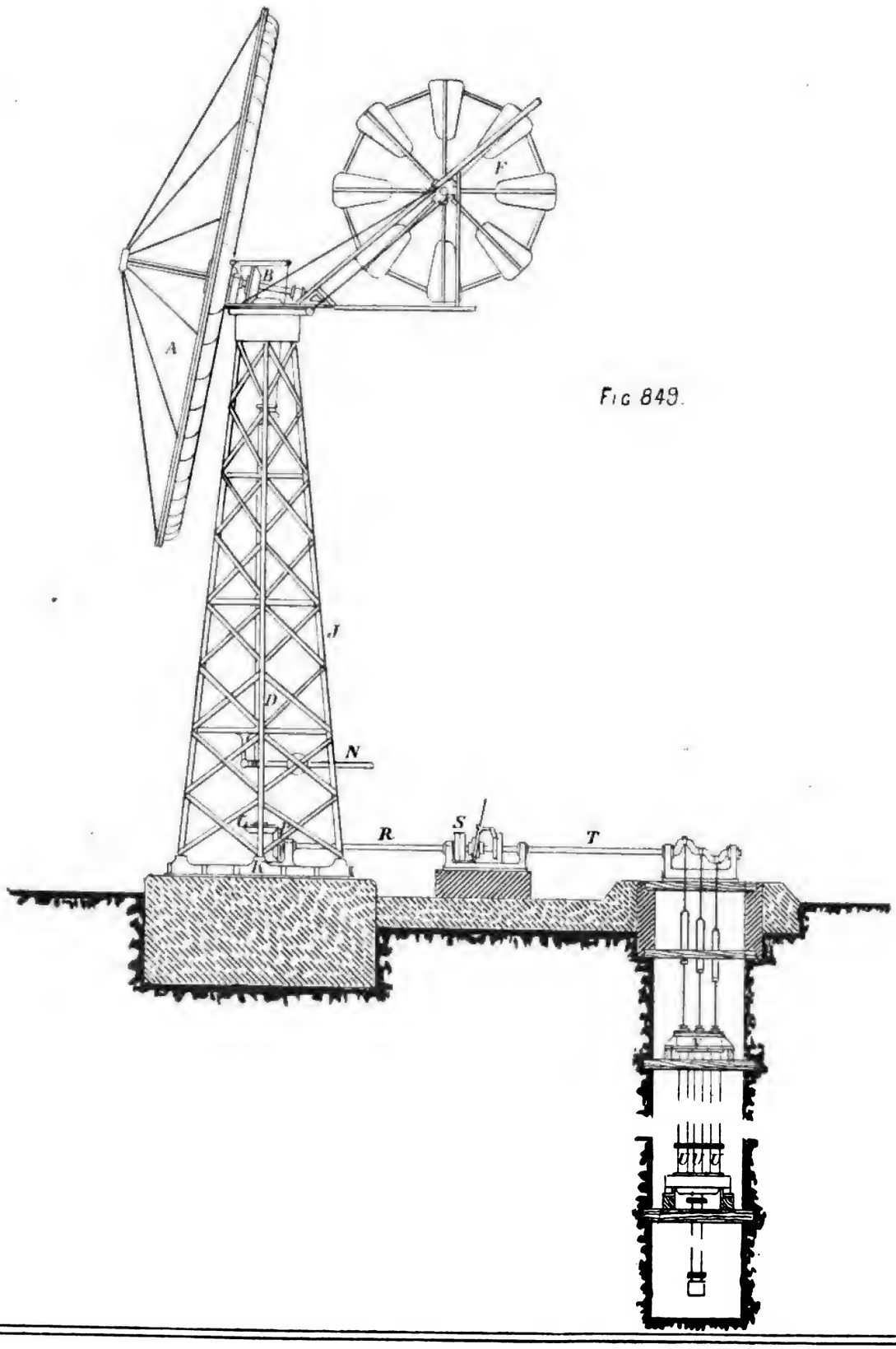

Fig 849.

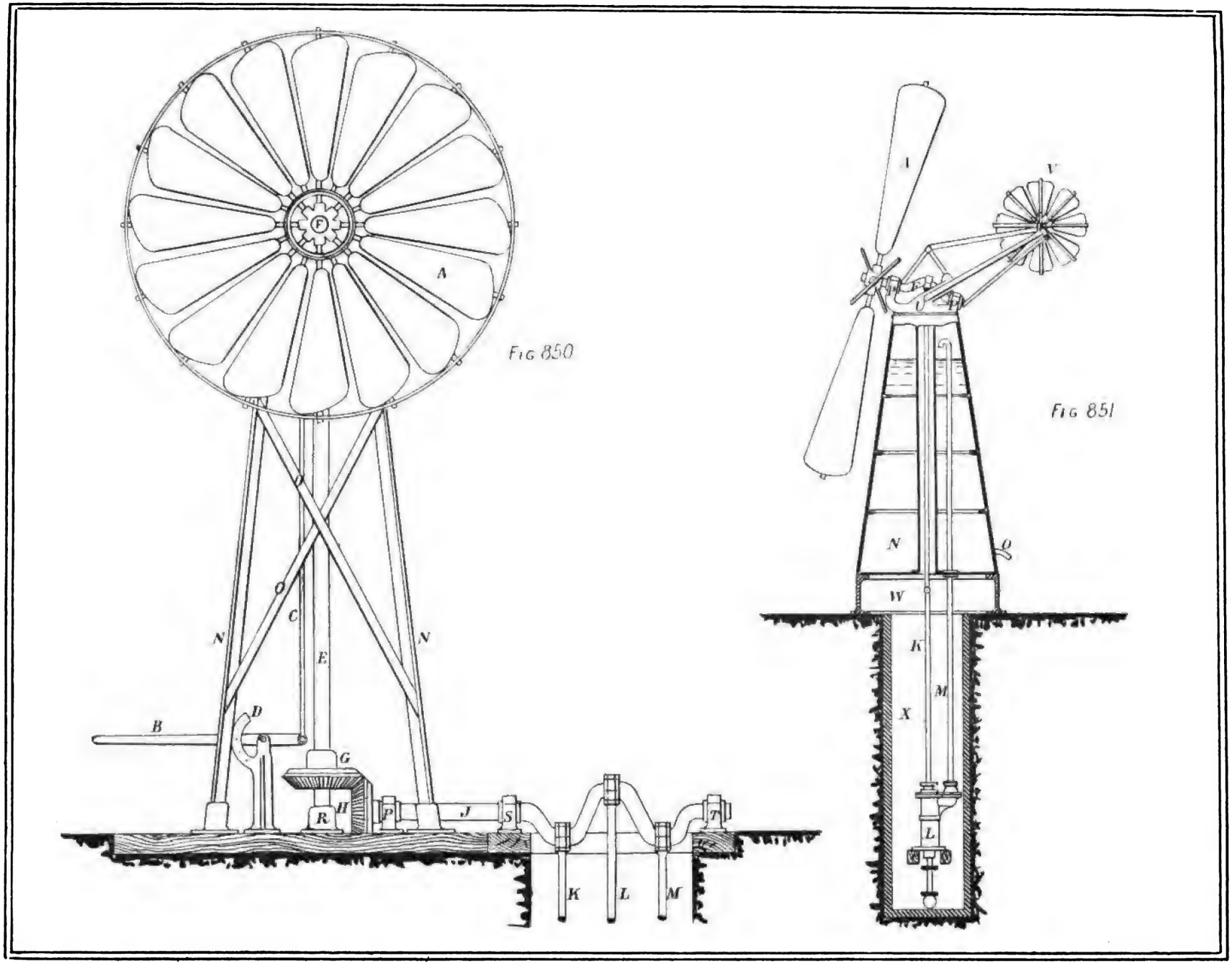

Plate CLXXXIII.

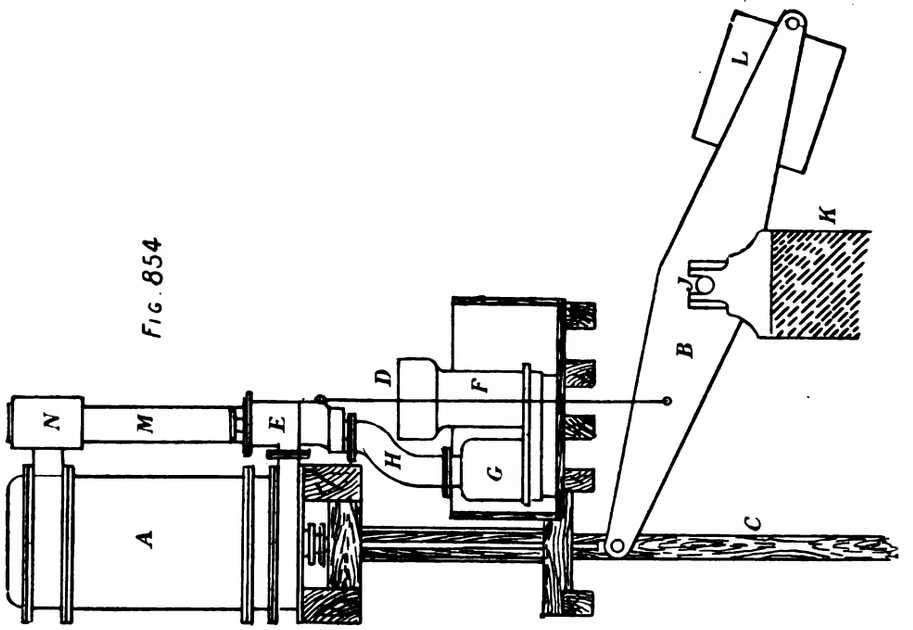

Fig. 854.

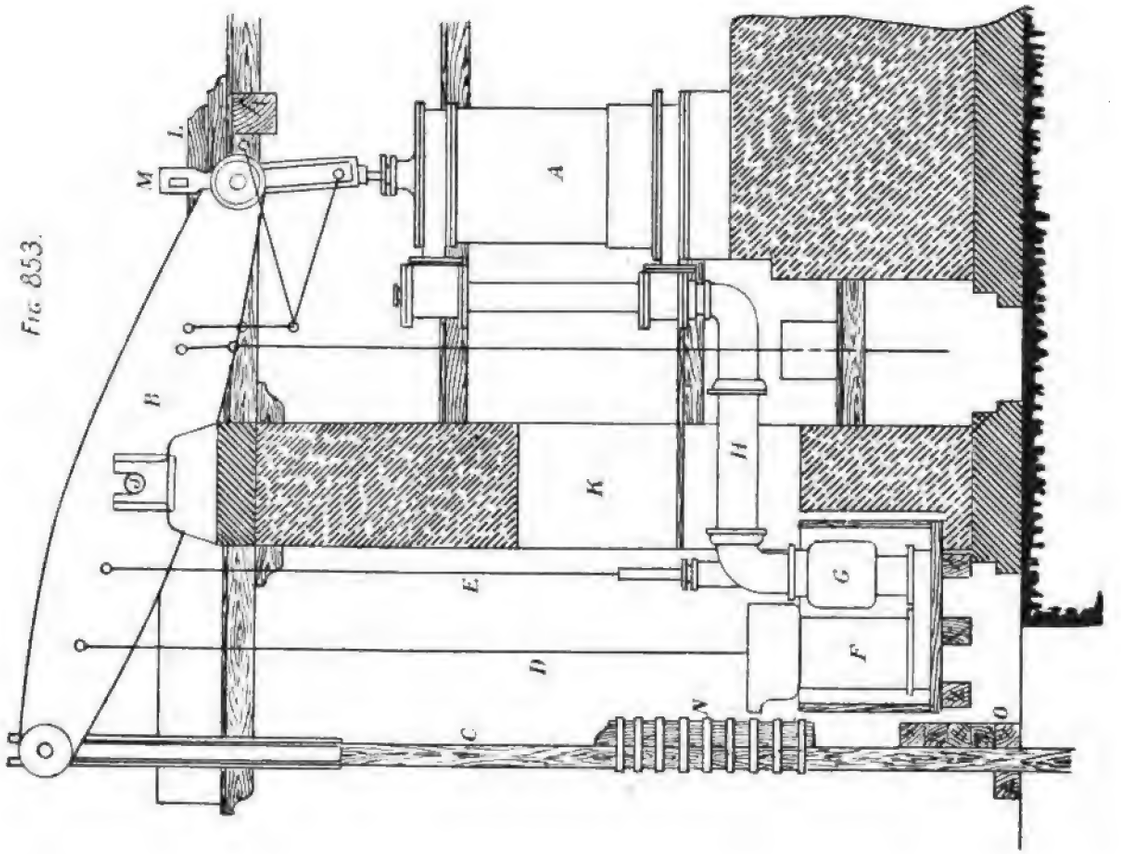

Fig. 853.

Fig. 855.

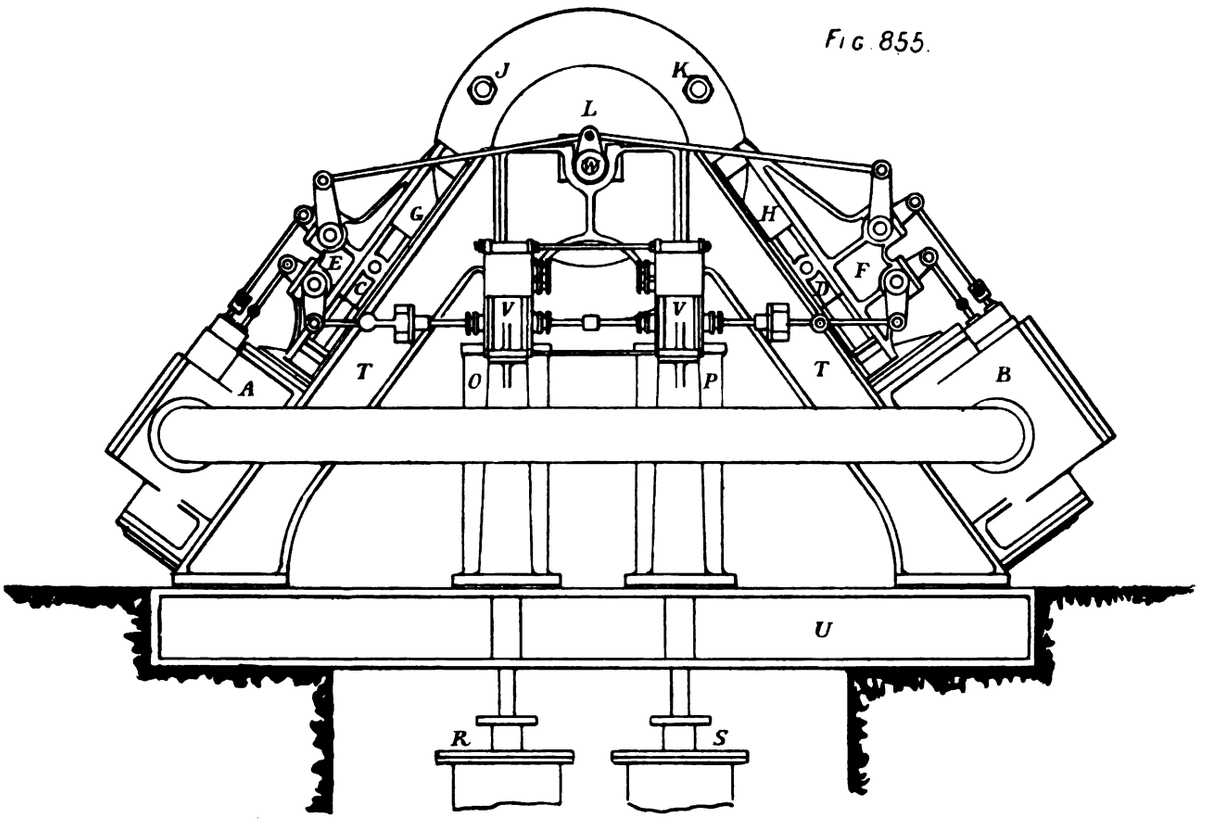

Fig. 856.

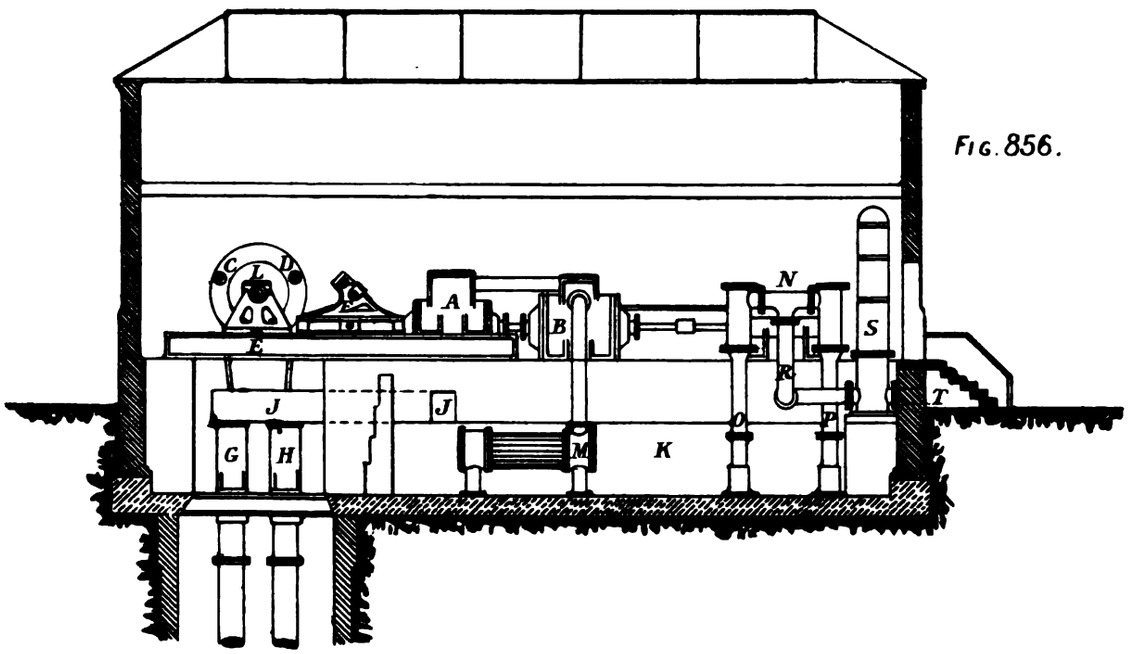

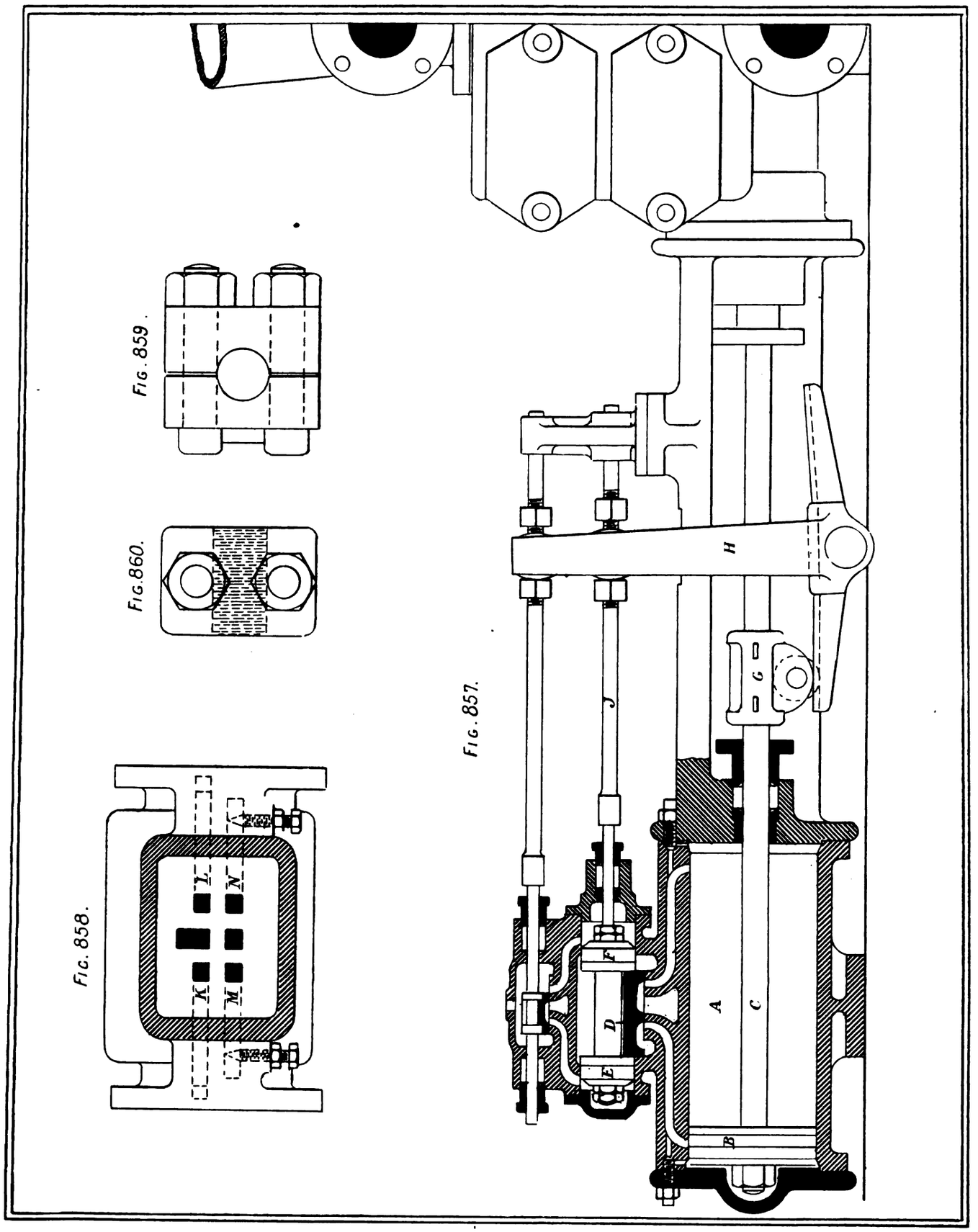

FIG. 857.

FIG. 858.

FIG. 859.

FIG. 860.

Fig. 873.

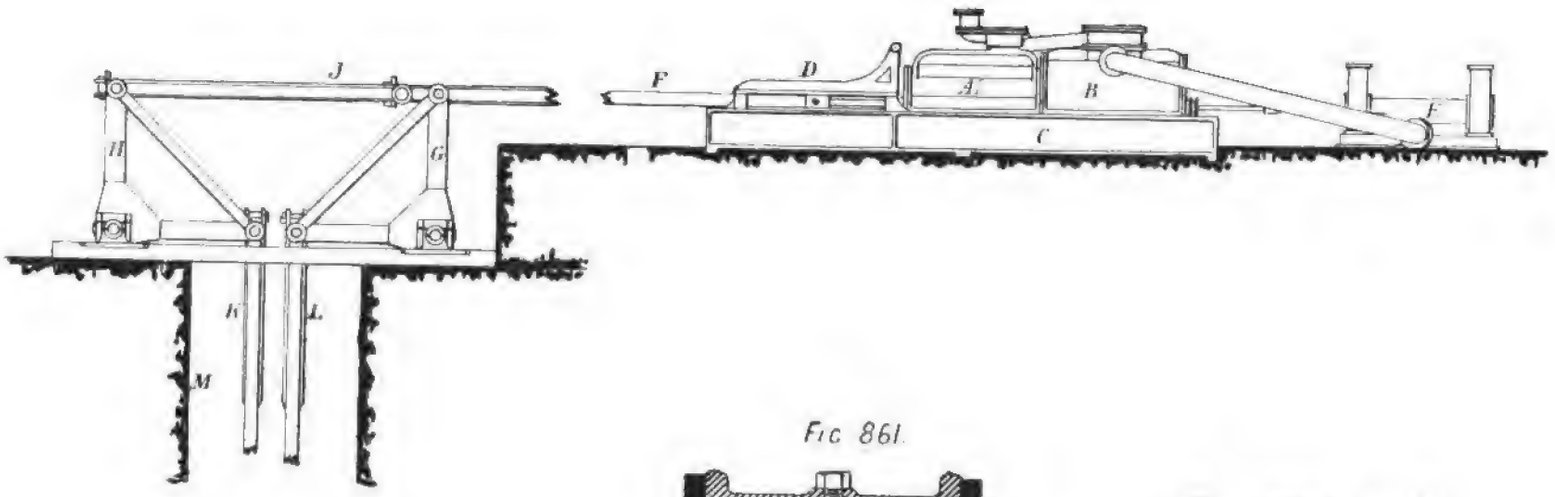

Fig. 861.

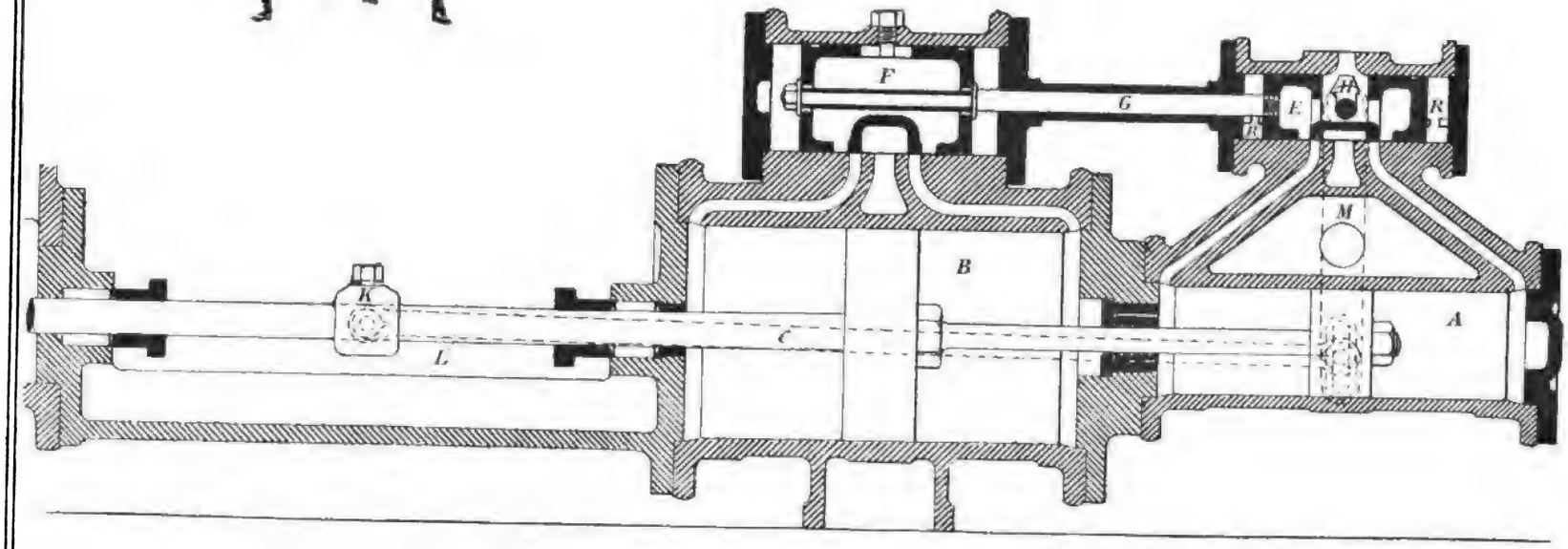

Plate CLXXXVII.

Fig 863.

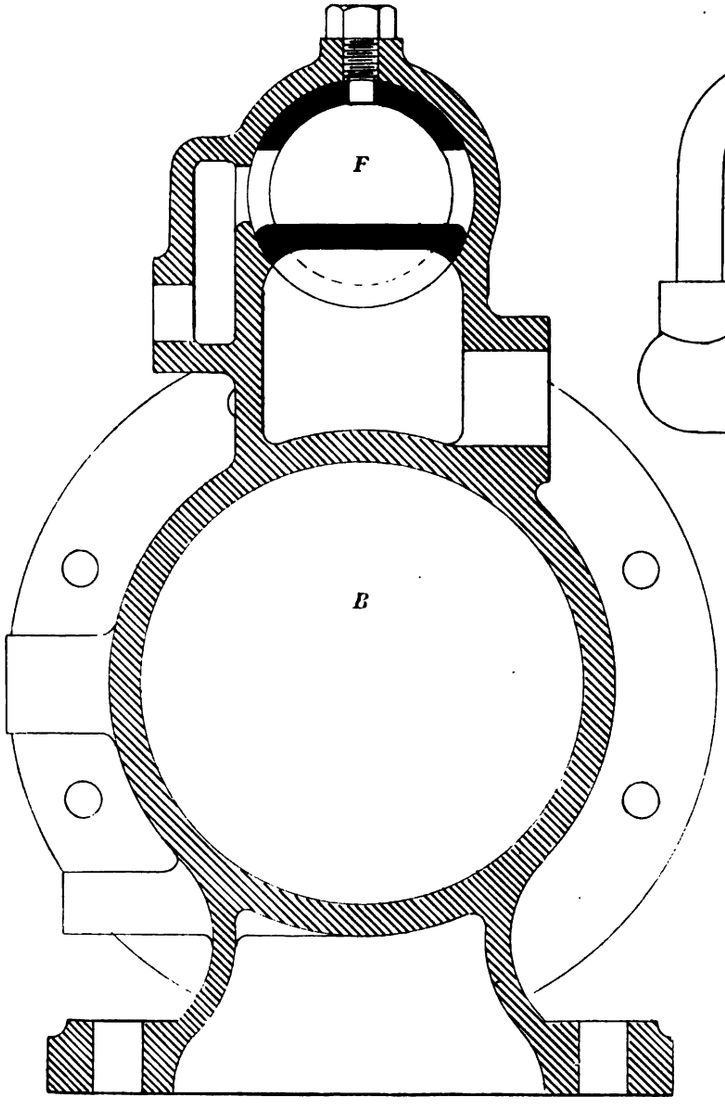

Fig. 862.

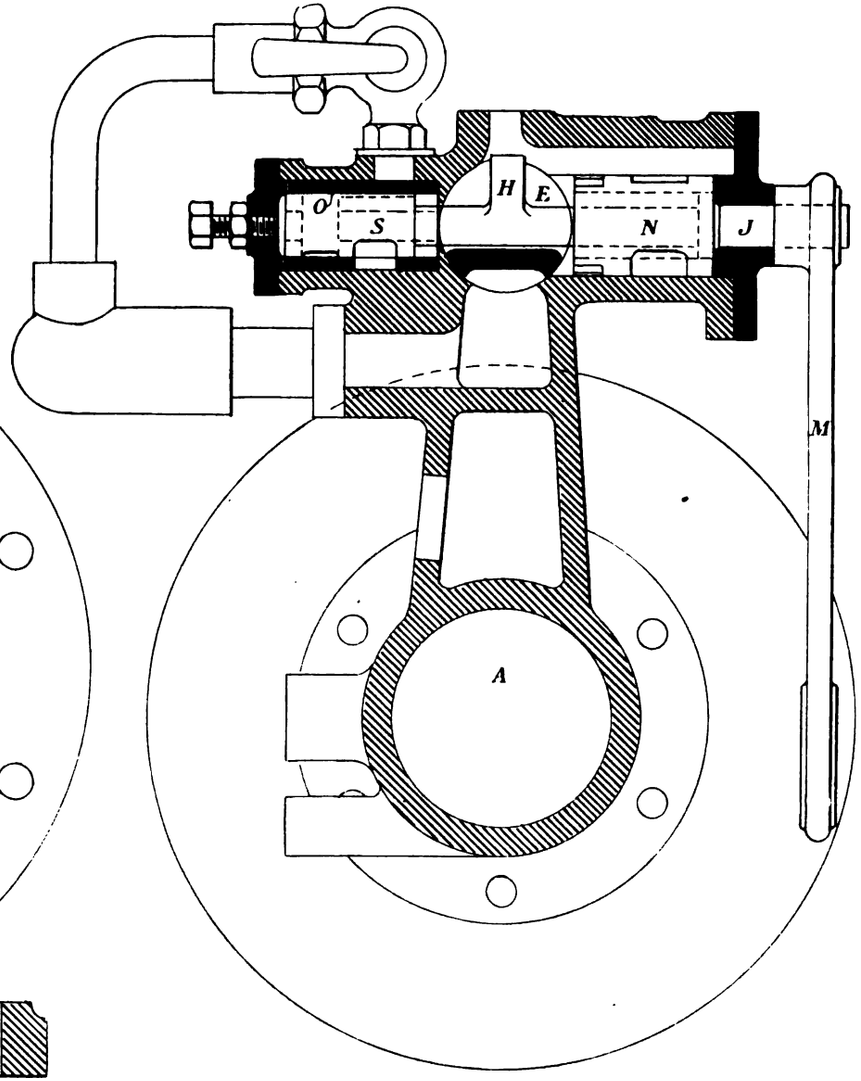

Plate CLXXXVIII.

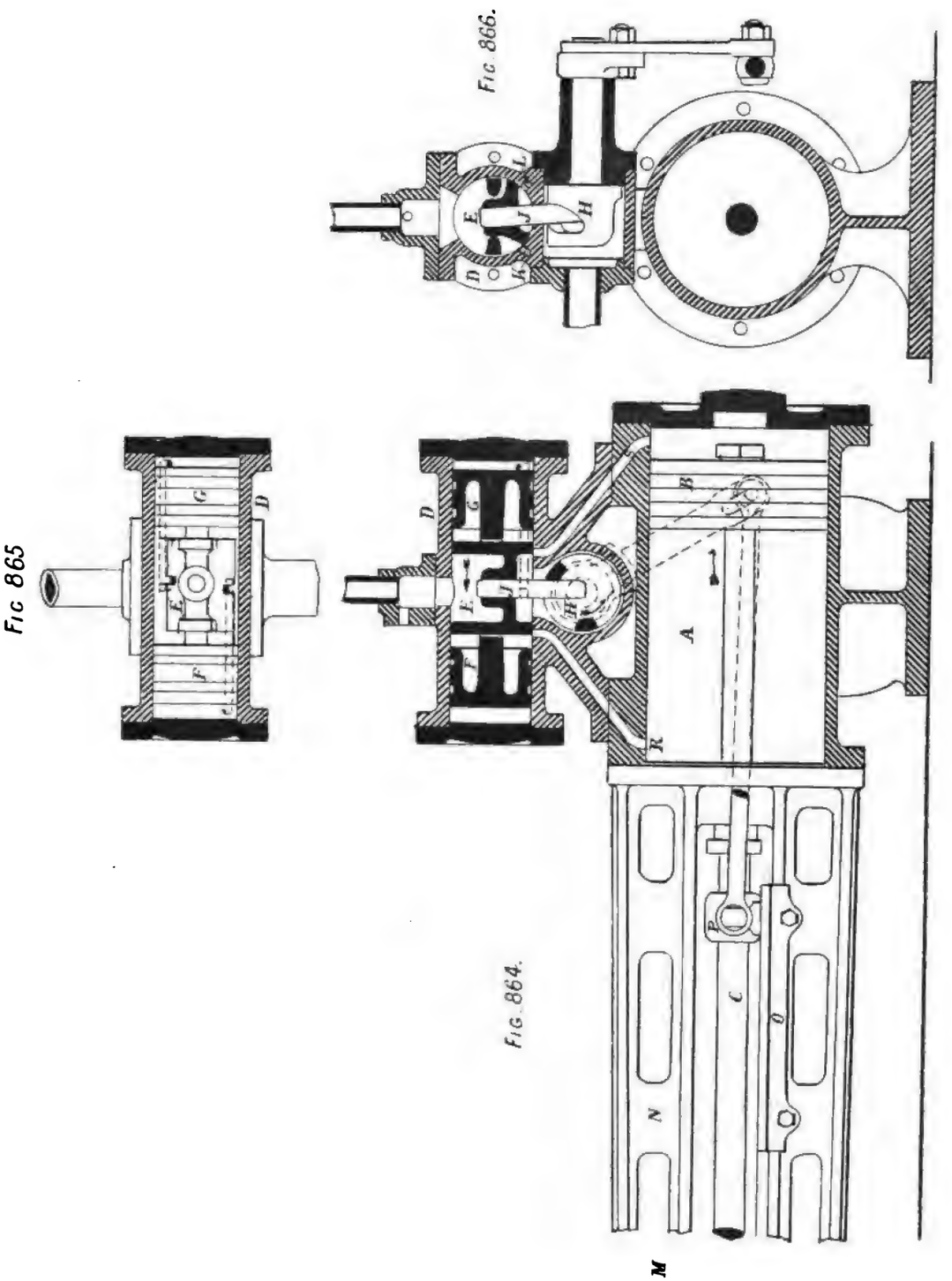
Fig 866.
Fig 865
Fig 864.
A
B
C
D
E
F
G
H
J
K
L
M
N
O
P

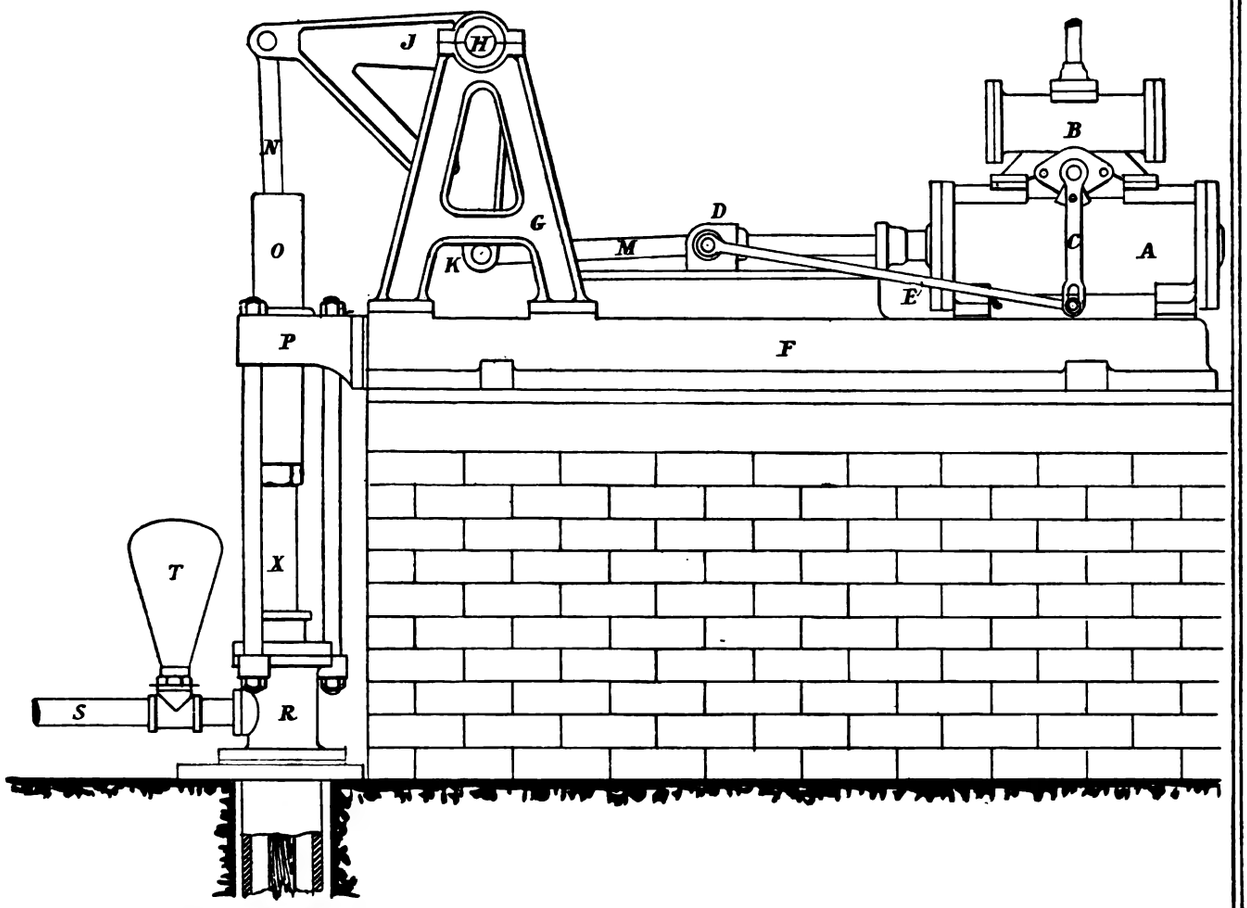

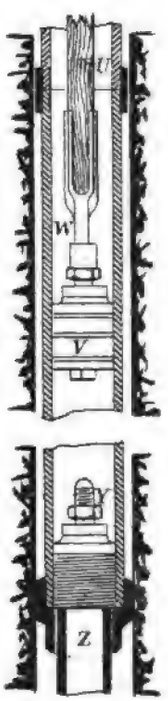

FIG. 867.

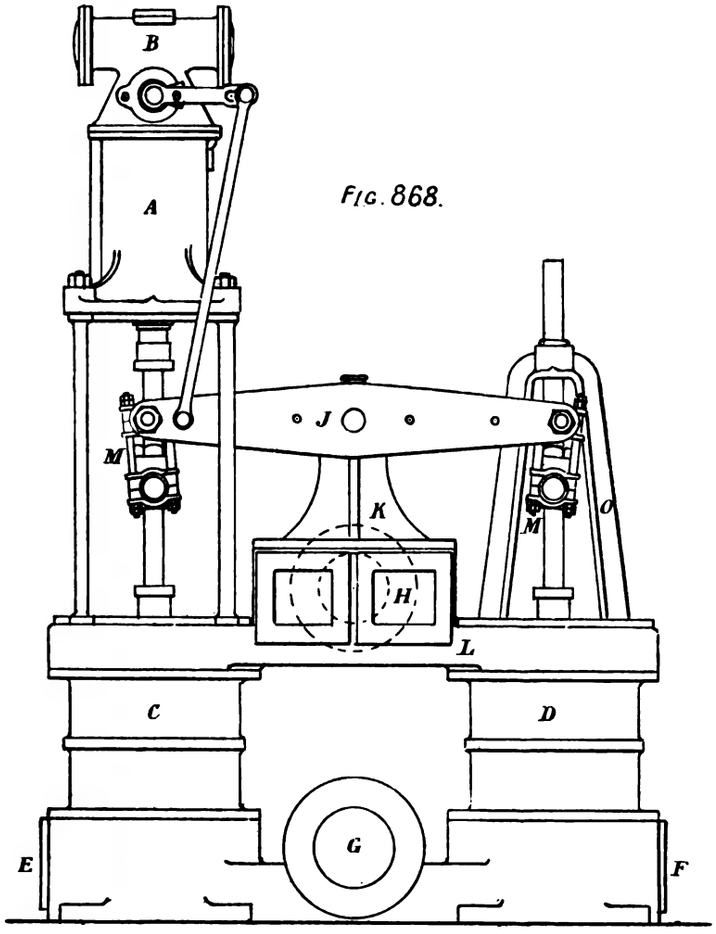

Fig. 868.

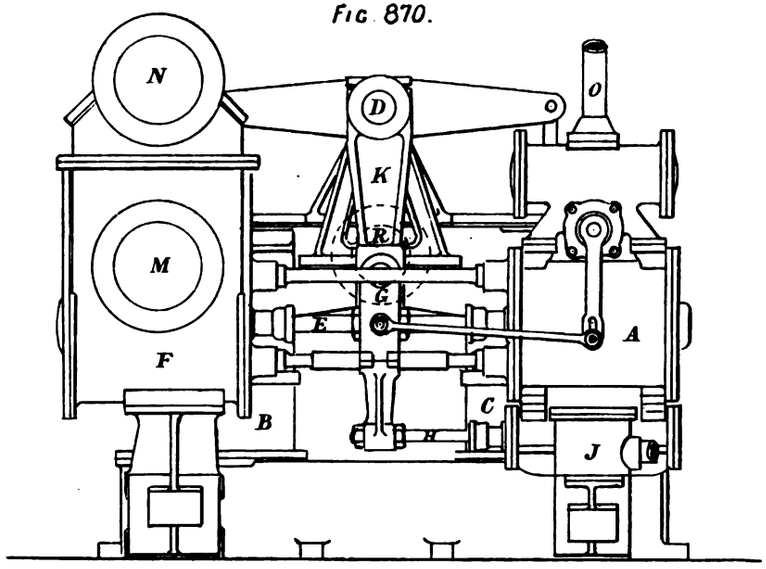

Fig. 870.

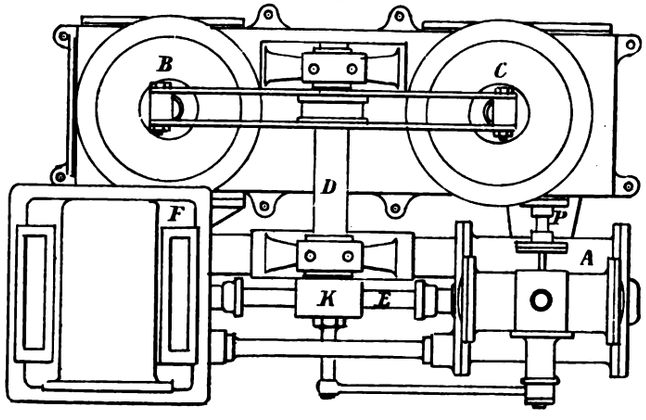

Fig. 871

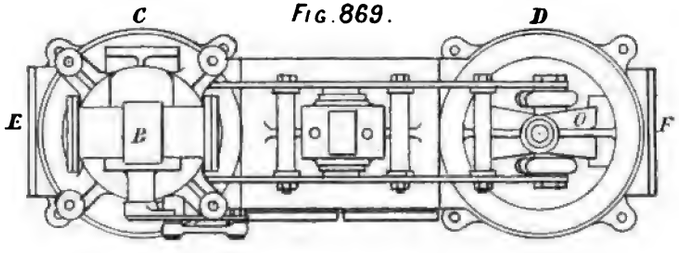

Fig. 869.

Plate. CXCI.

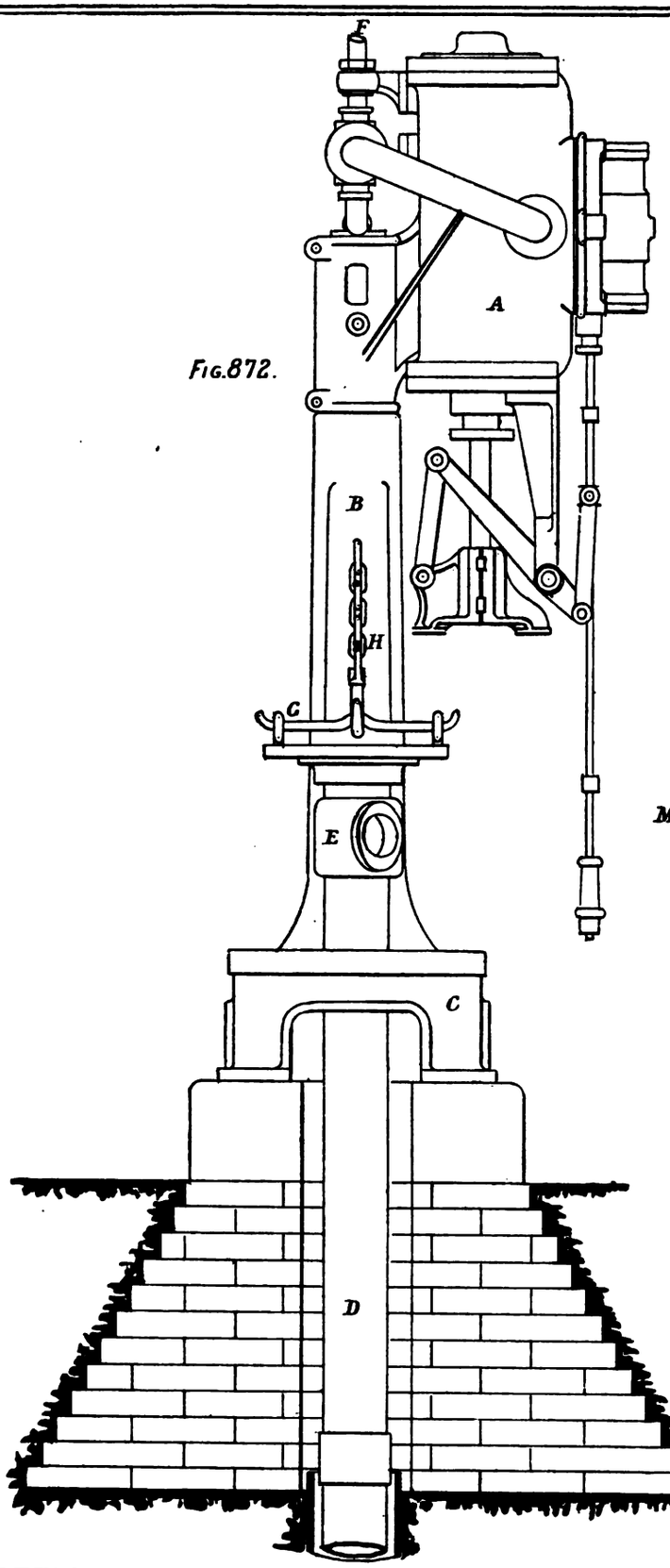

Fig.872.

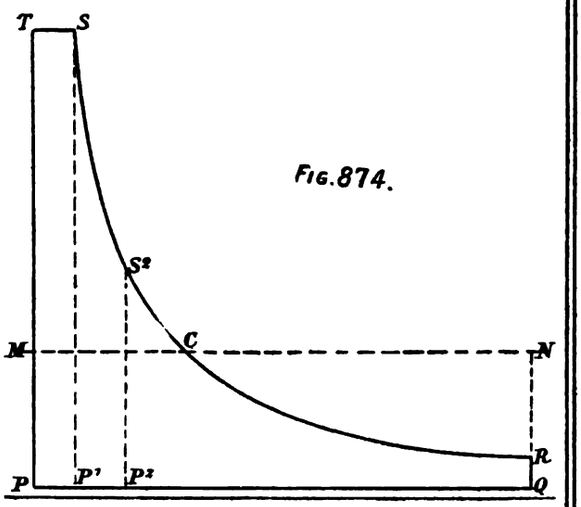

Fig.874.

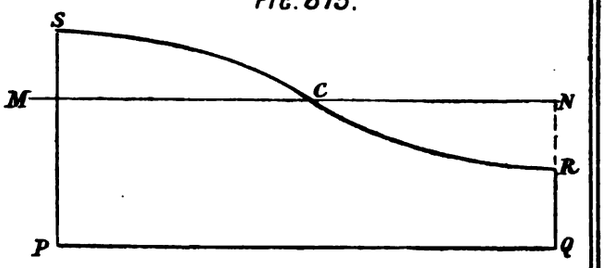

Fig. 875.

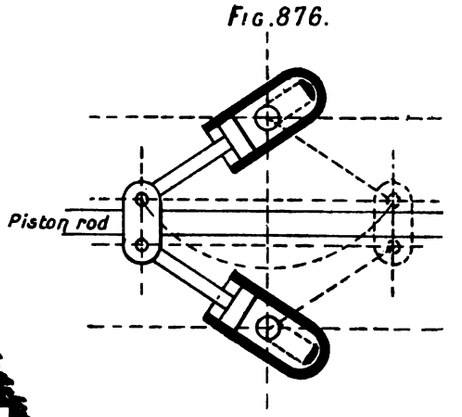

Fig.876.

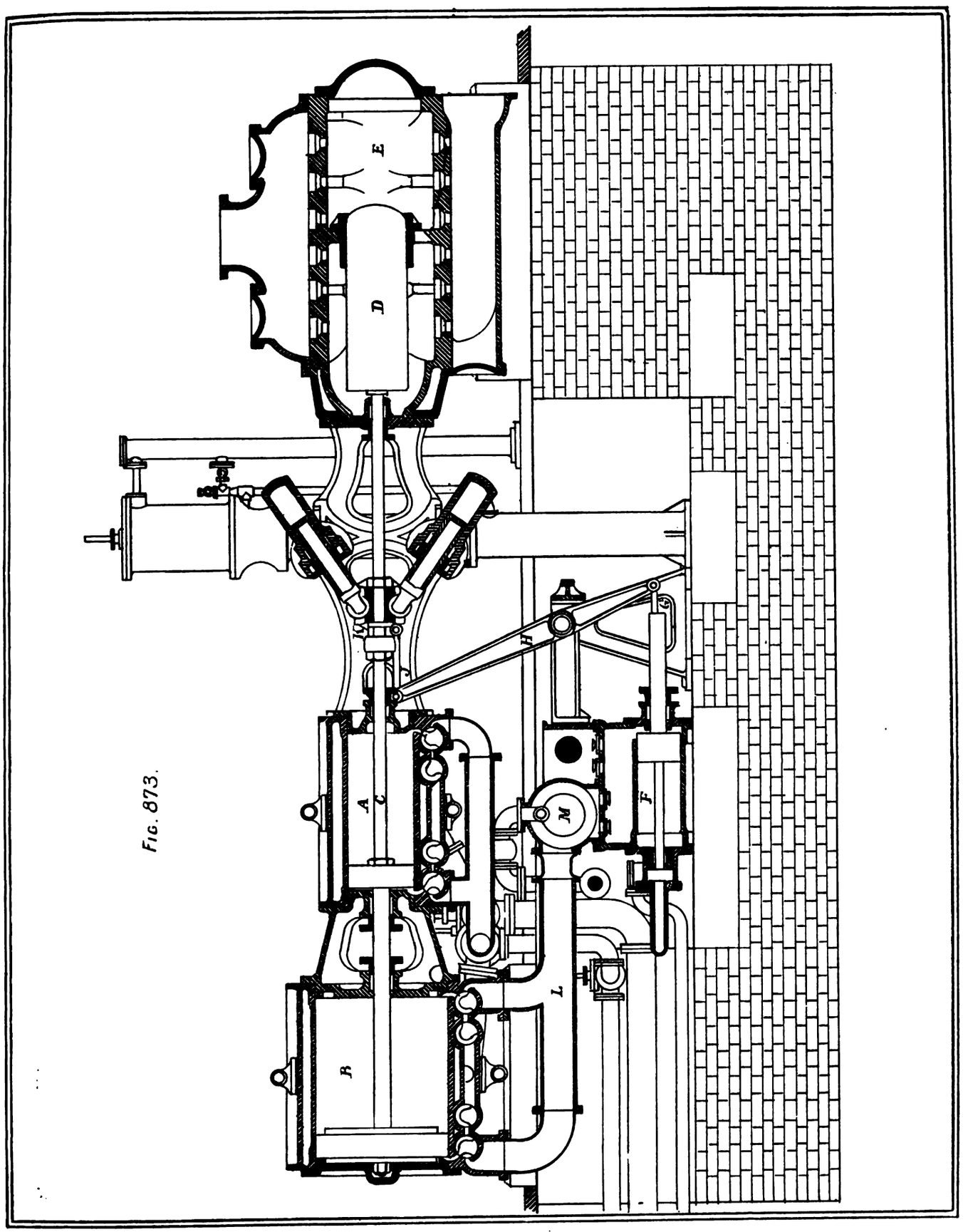

FIG. 873.

Fig. 877.

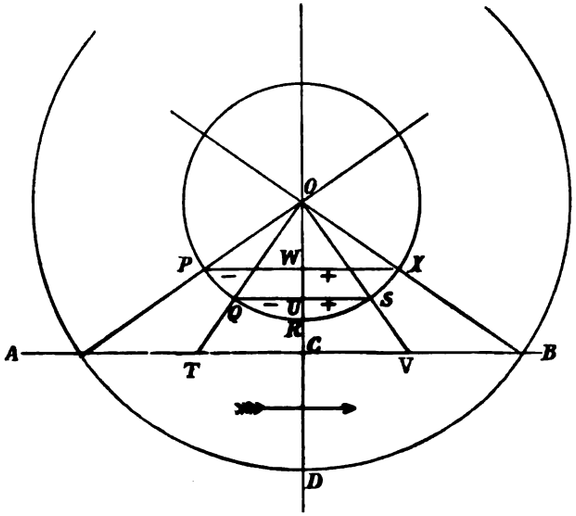

Fig. 879.

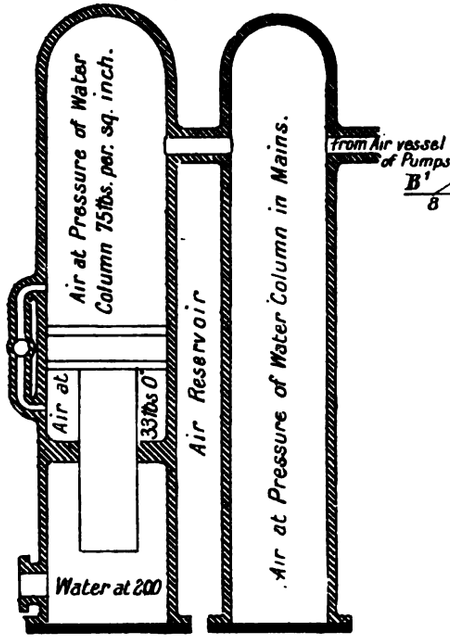

Fig 878

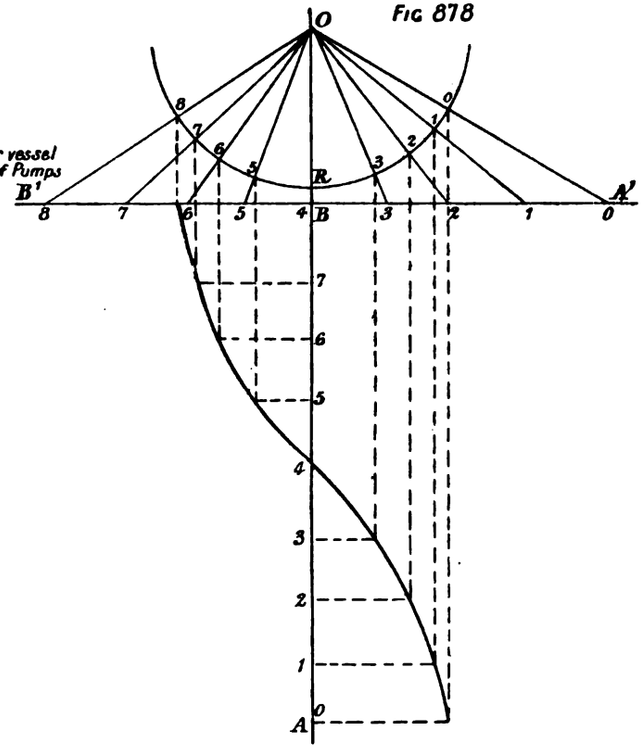

Fig. 881.

High Pressure Cylinder

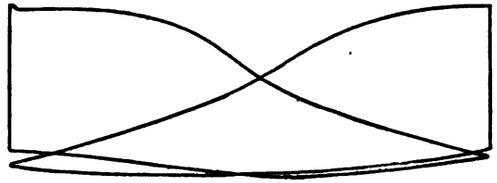

Atmosphere Line

Fig. 882

Intermediate Pressure Cylinder

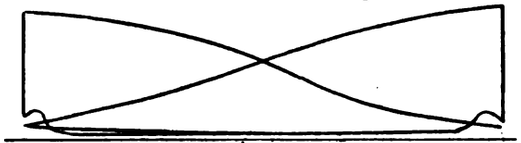

Fig. 883.

Low Pressure Cylinder.

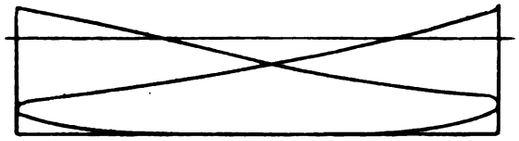

Plate CXCIV.

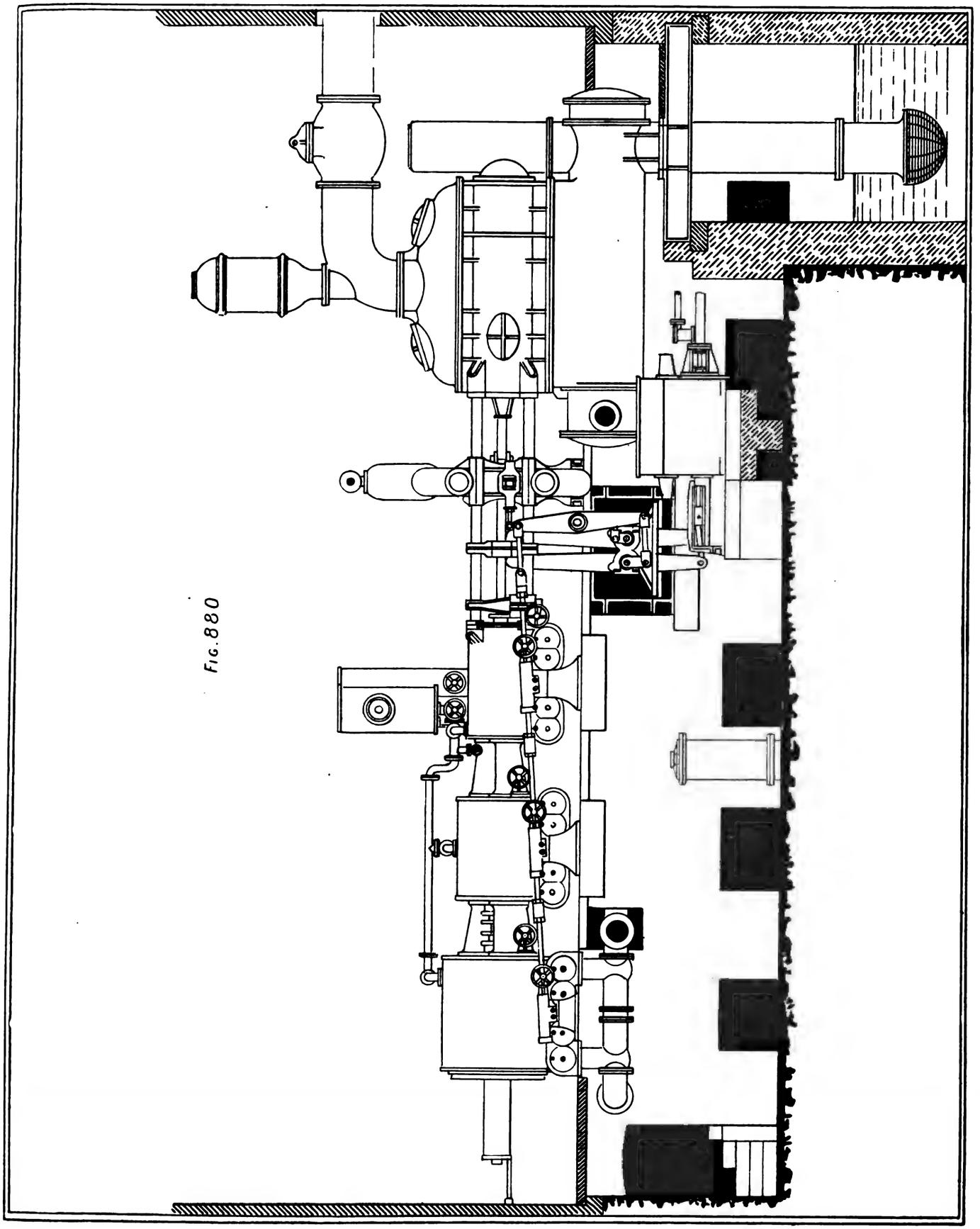

FIG. 880

Fig. 884.

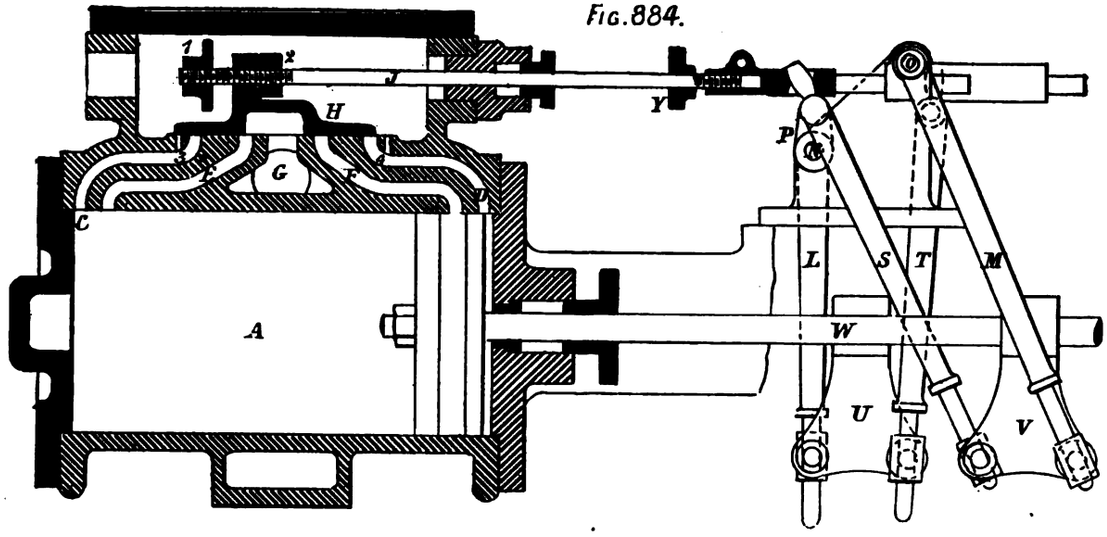

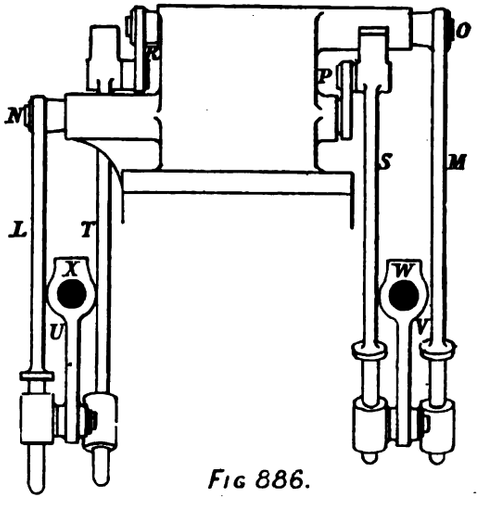

Fig 886.

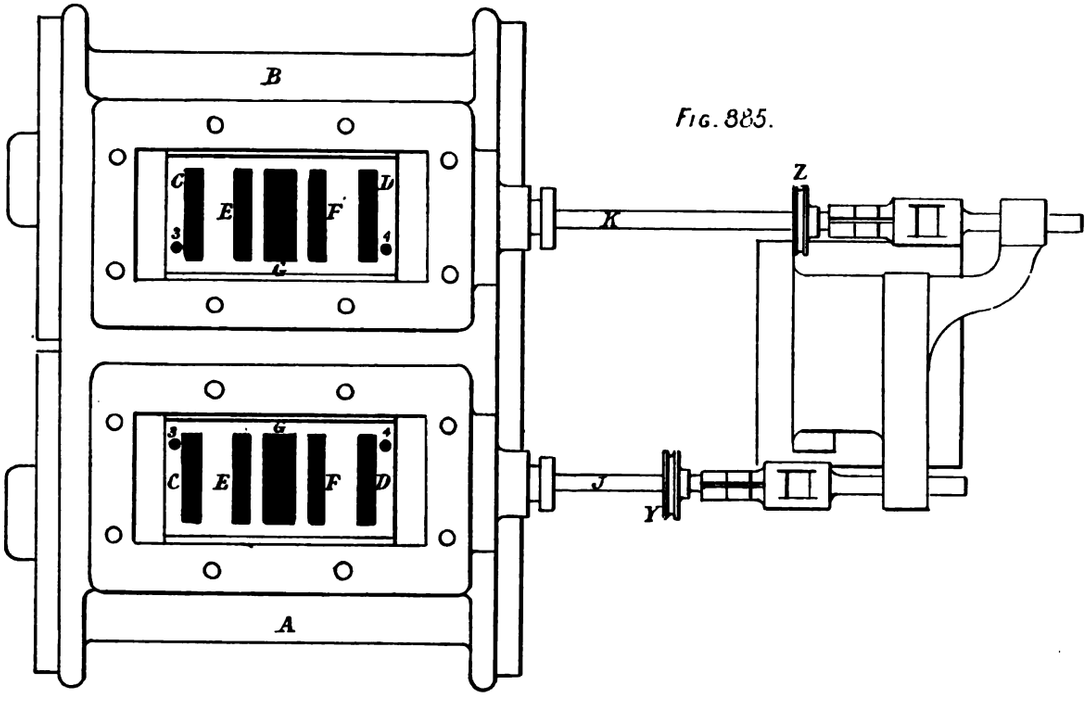

Fig. 885.

Plate CXCVI.

Fig. 887.

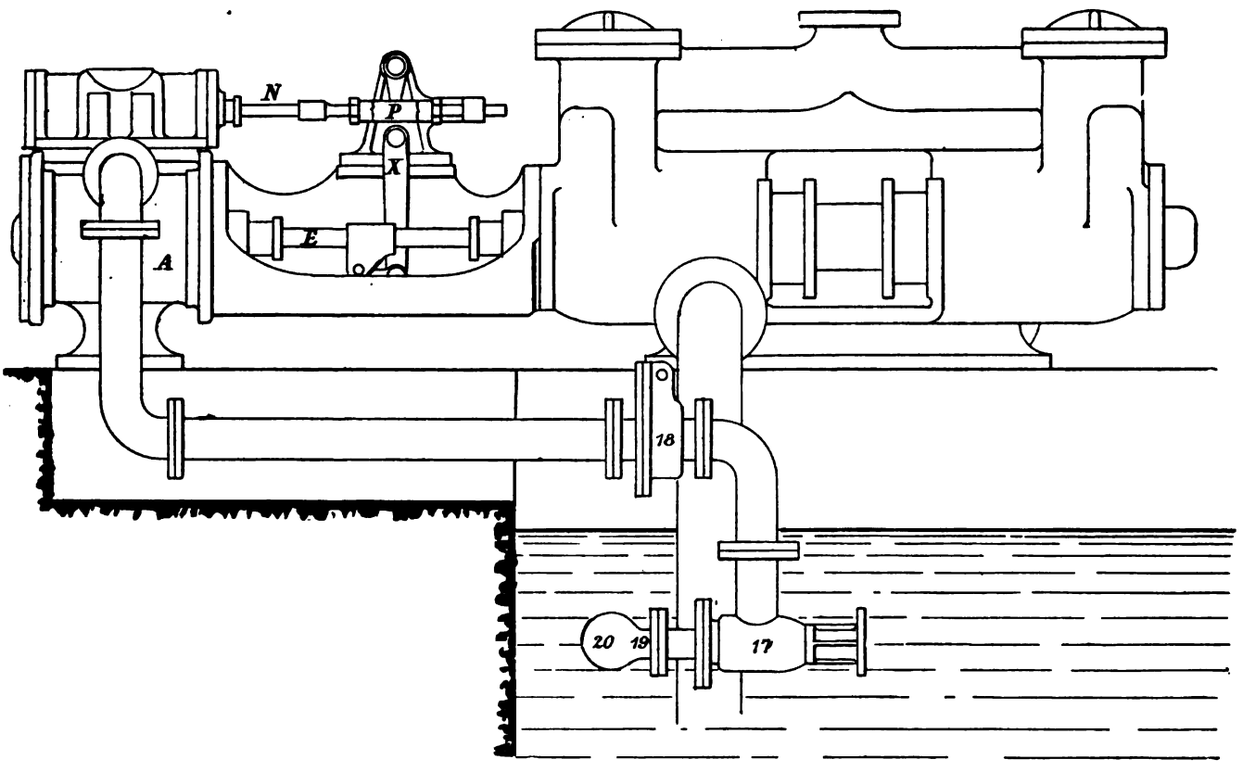

Fig. 888

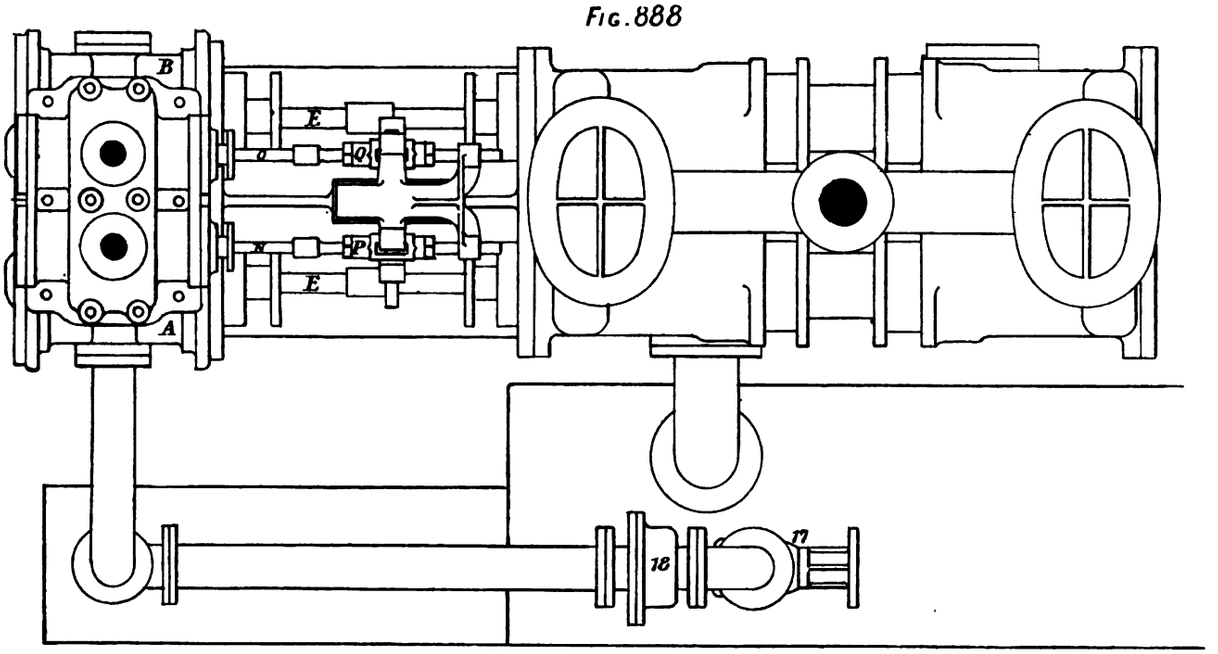

Fig 889.

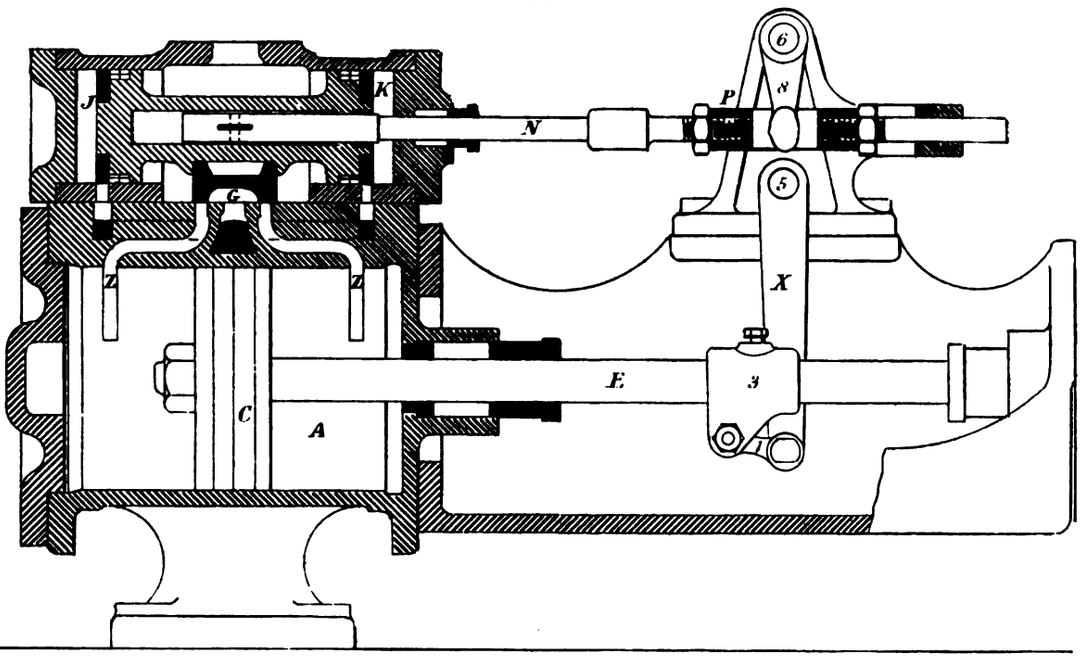

Fig 890.

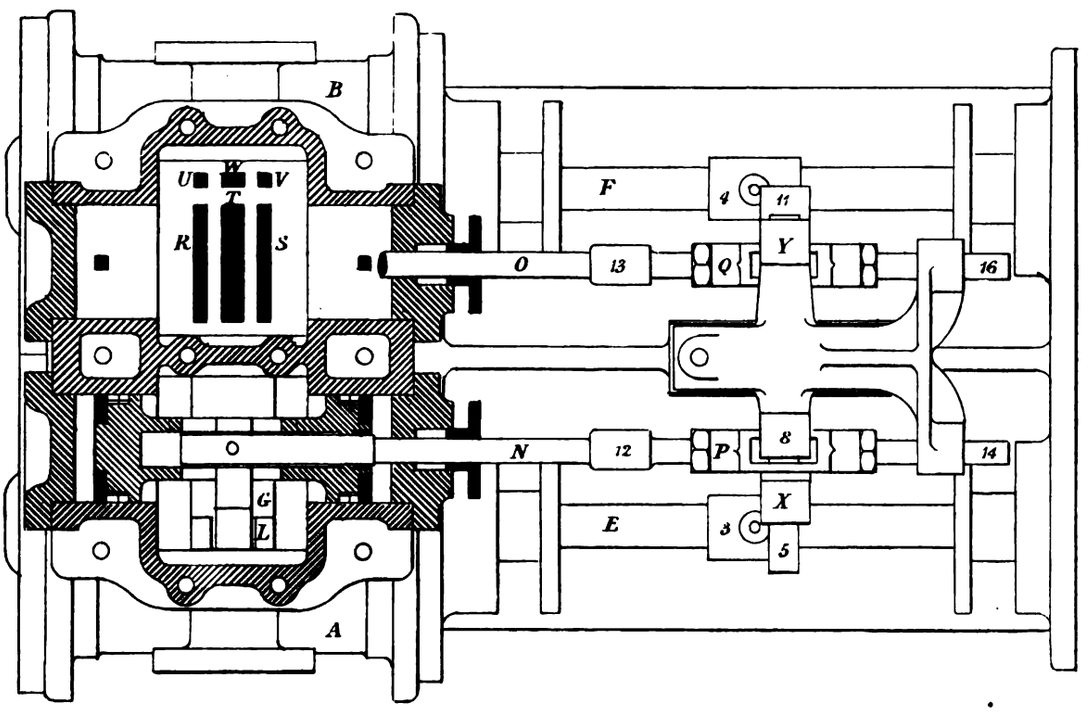

Fig. 891

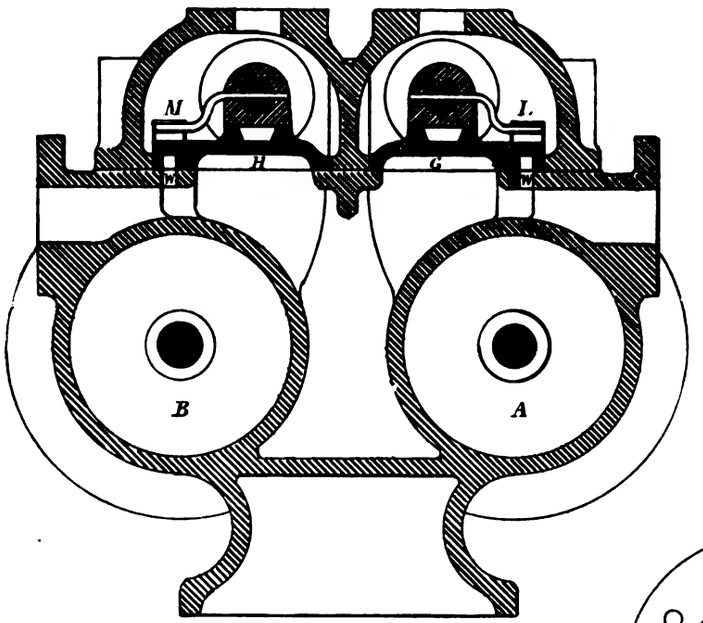

Fig. 892.

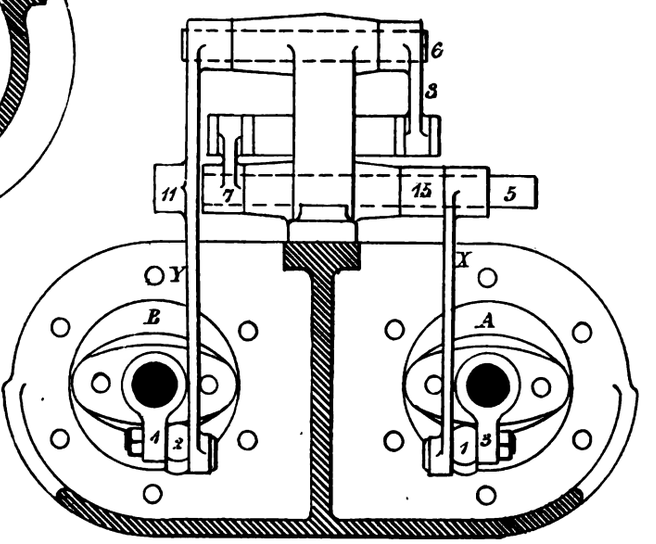

Fig. 893.

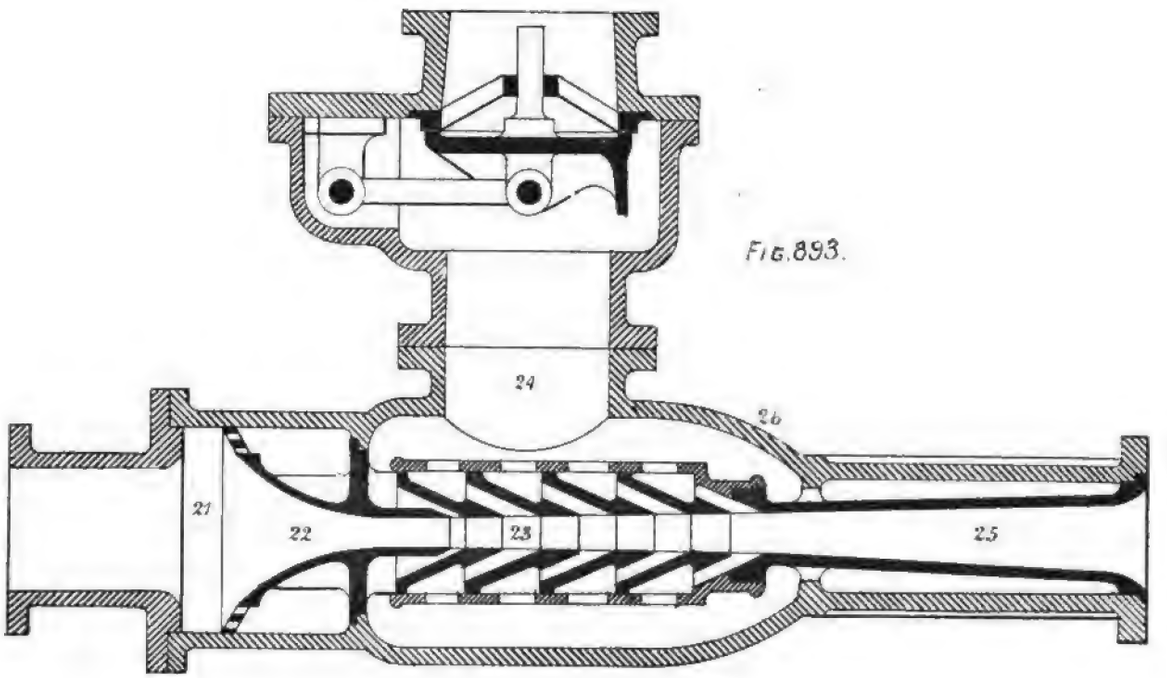

FIG. 894.

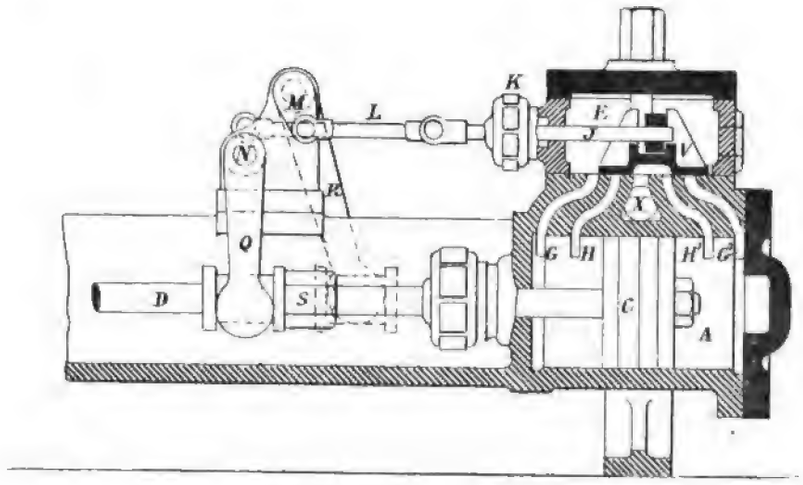

FIG. 896.

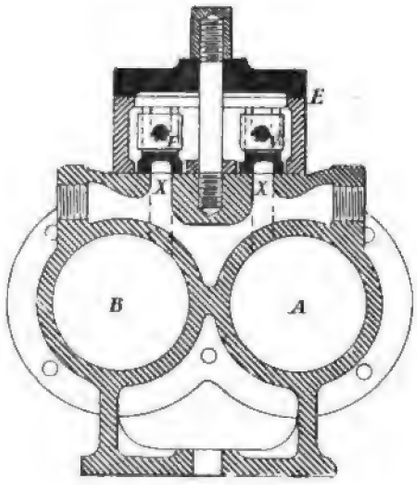

FIG 895.

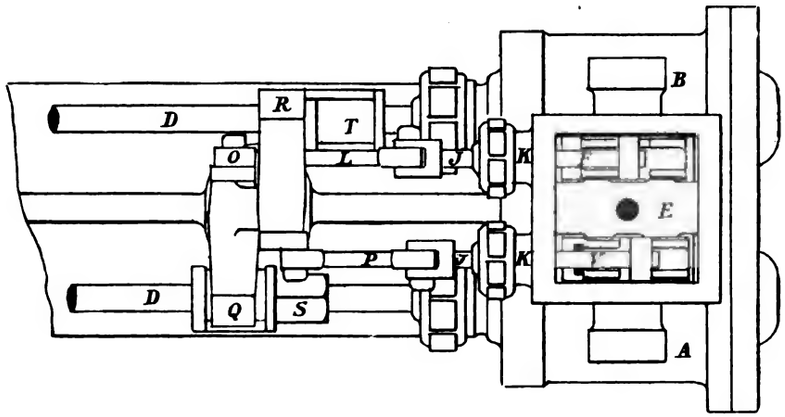

Plate CC.

Fig. 897.

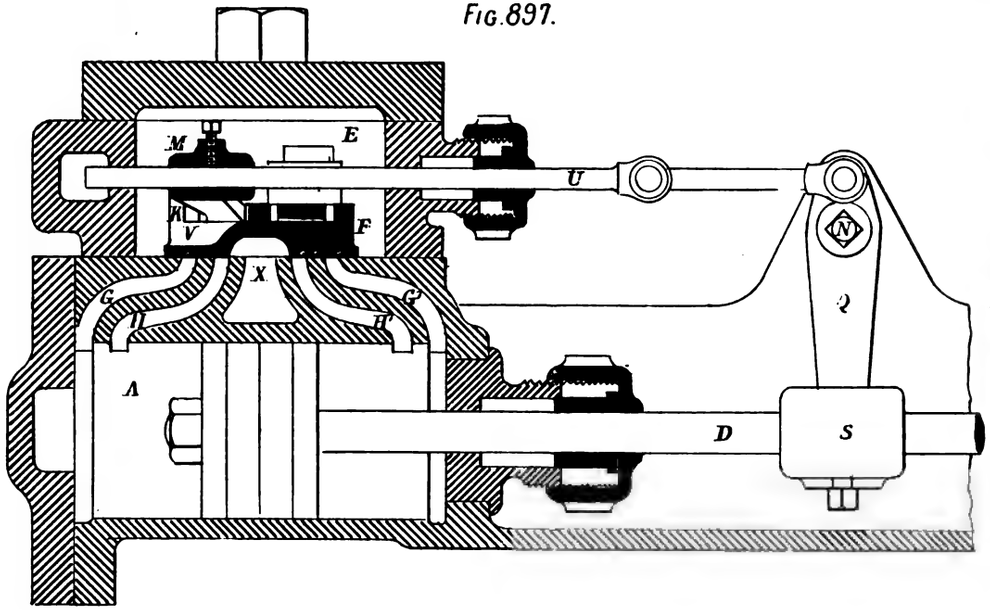

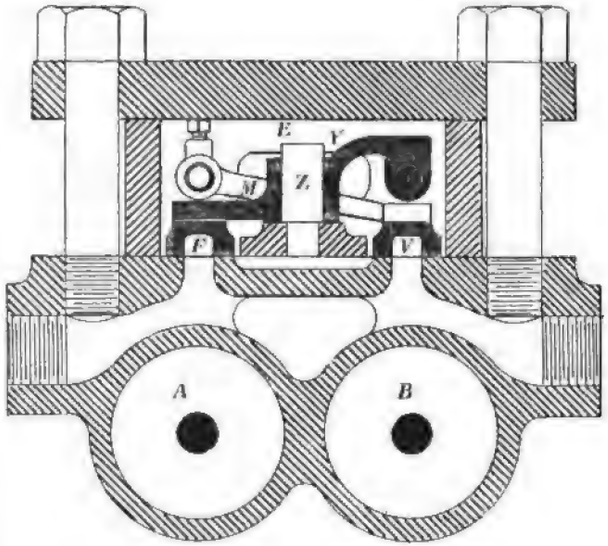

Fig. 899.

Fig. 898.

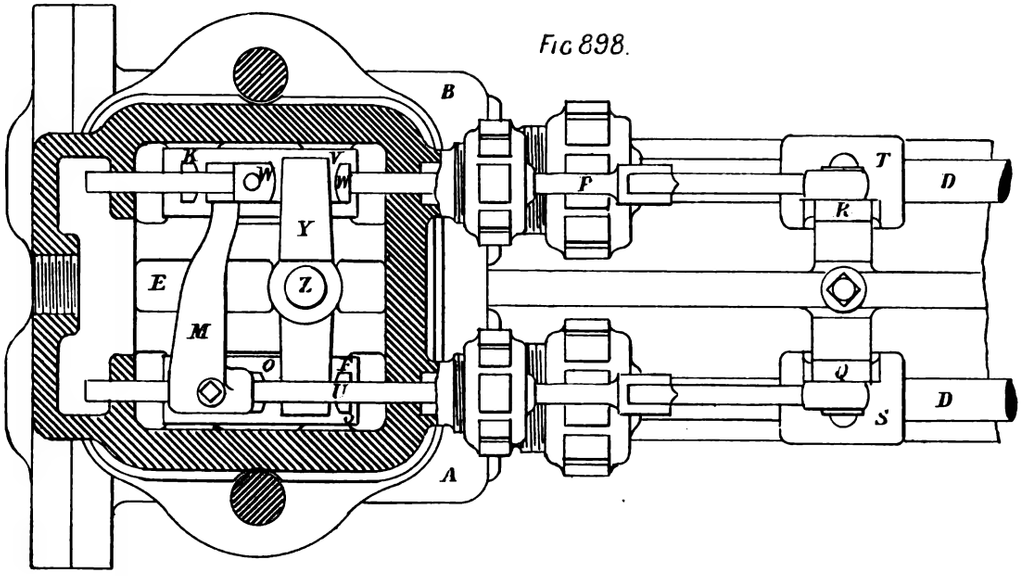

Plate CCI.

Fig. 911

Fig 900.

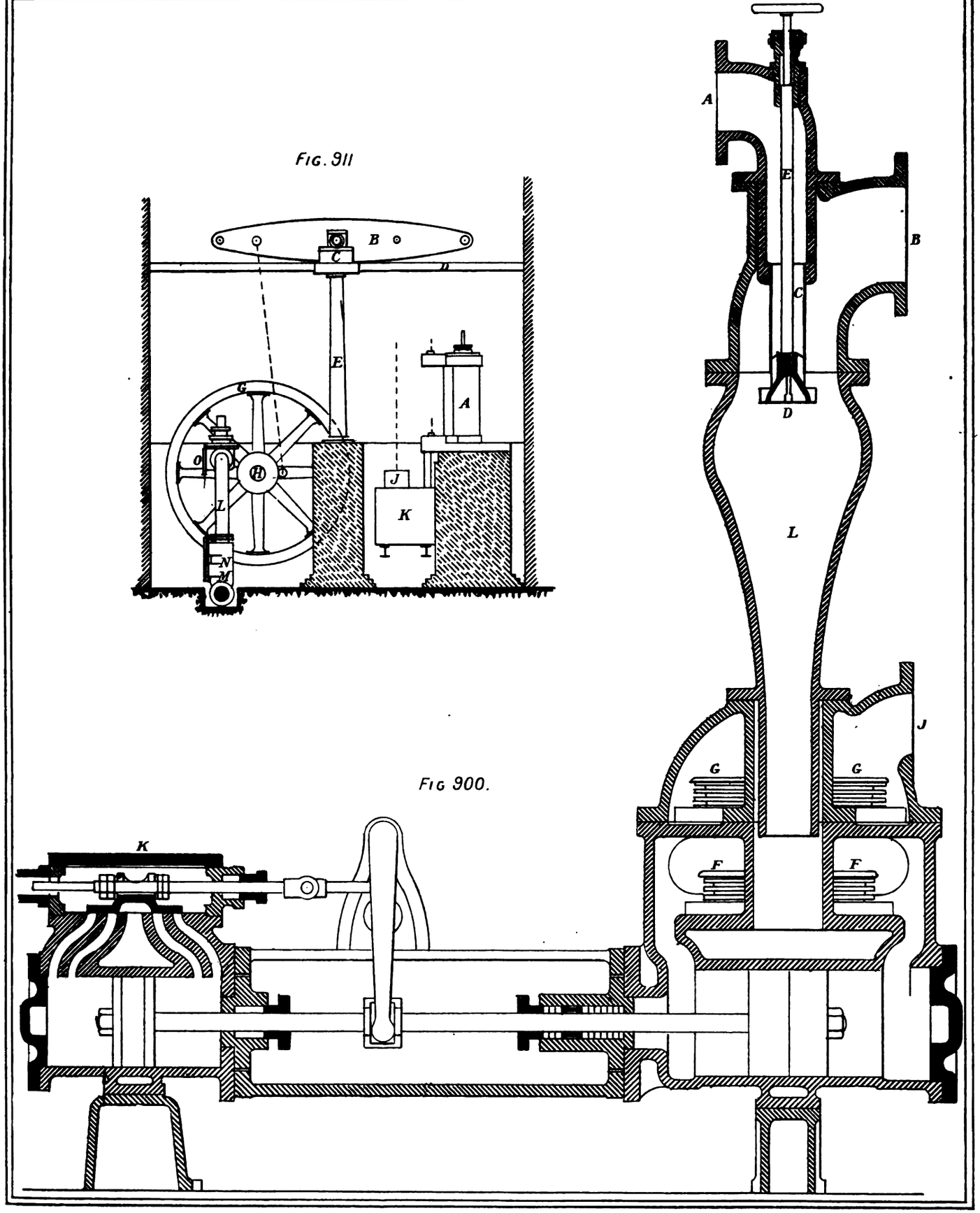

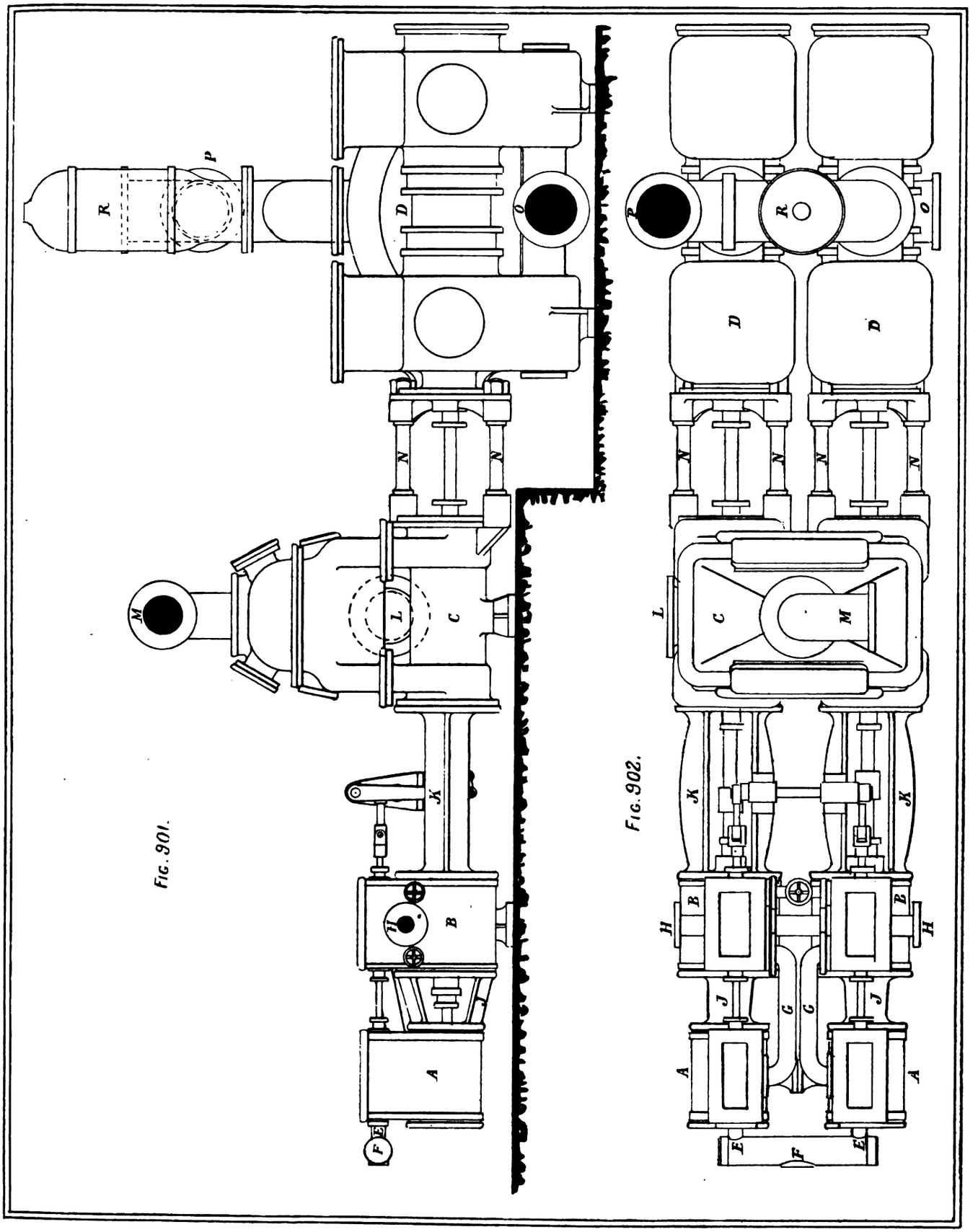

Fig. 901.

Fig. 902.

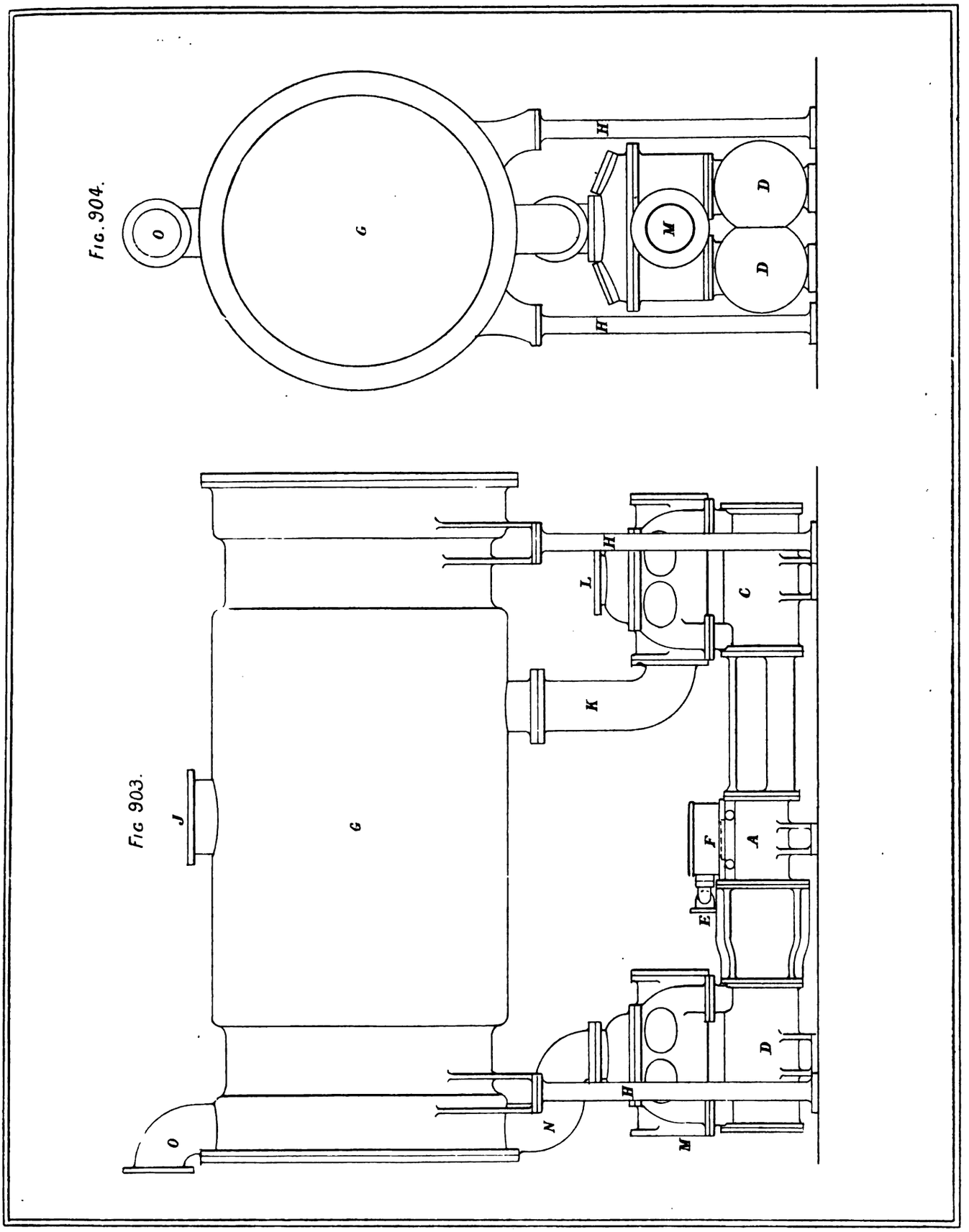
Fig. 904.
O
G
H
M
D
D
H
Fig 903.
J
G
K
L
H
C
F
A
E
D
H
N
O
M

Fig. 905.

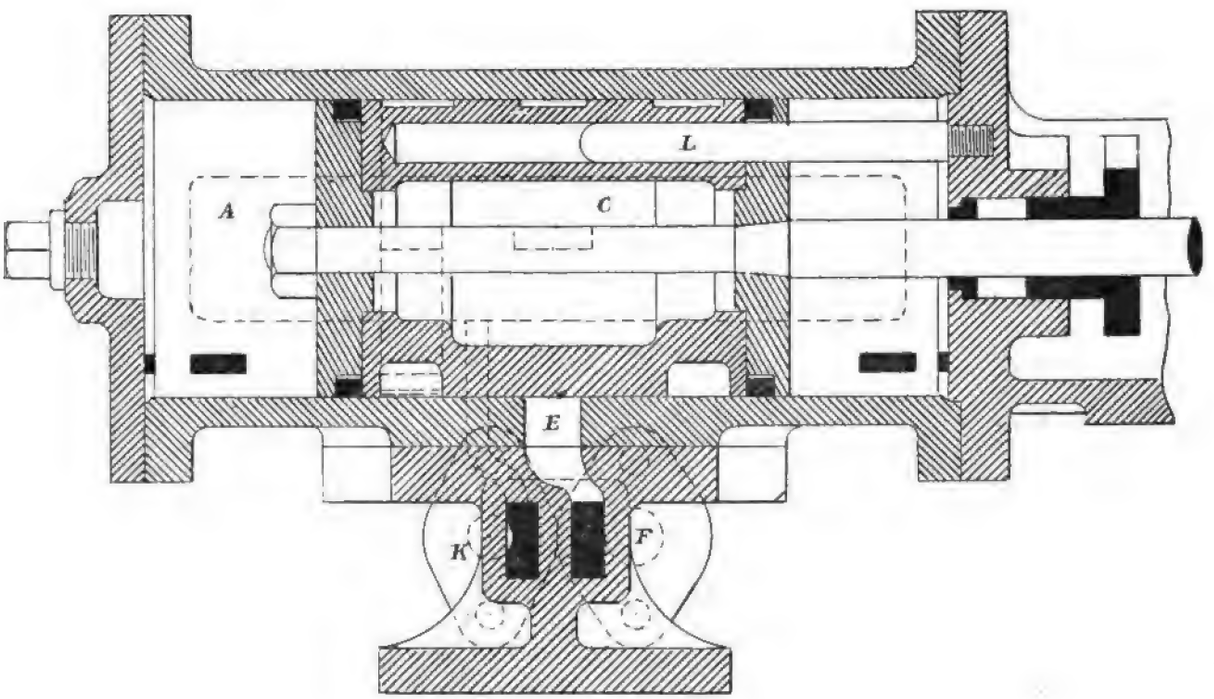

Fig. 907.

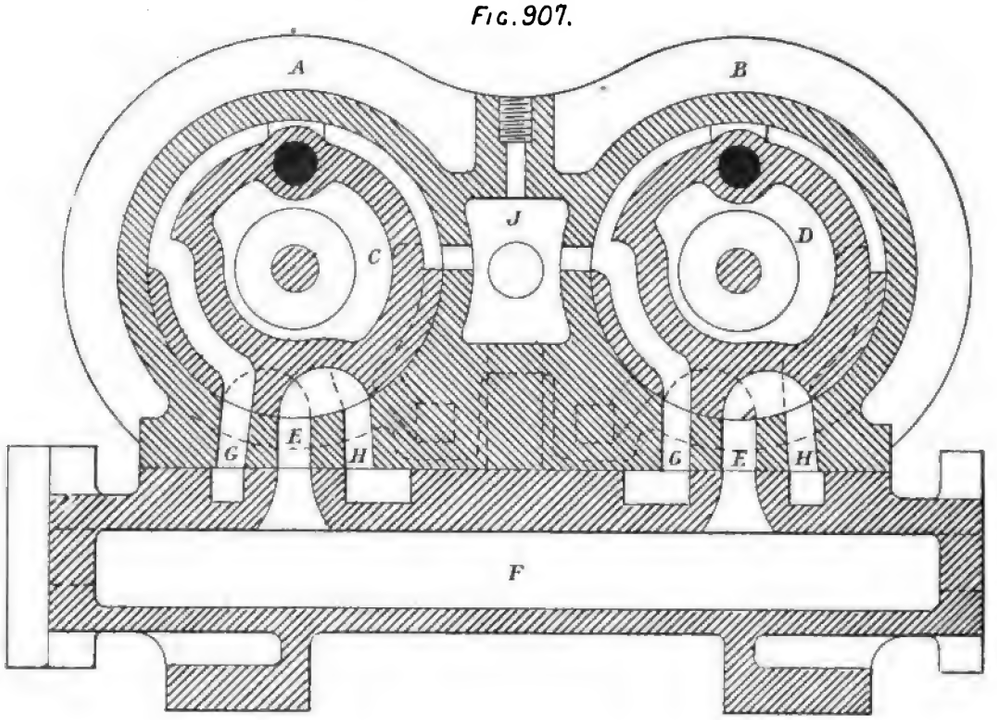

Fig. 906

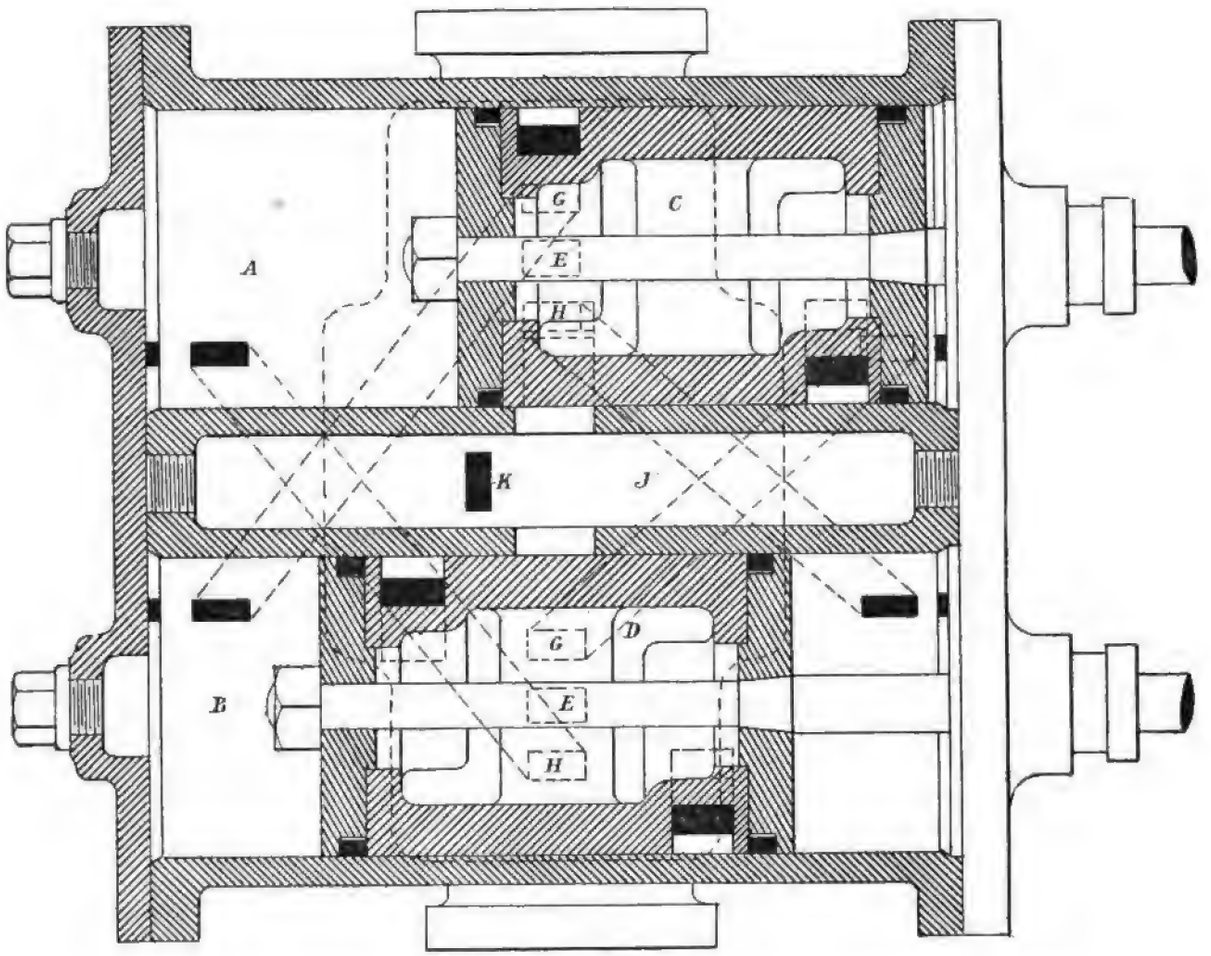

Fig 908.

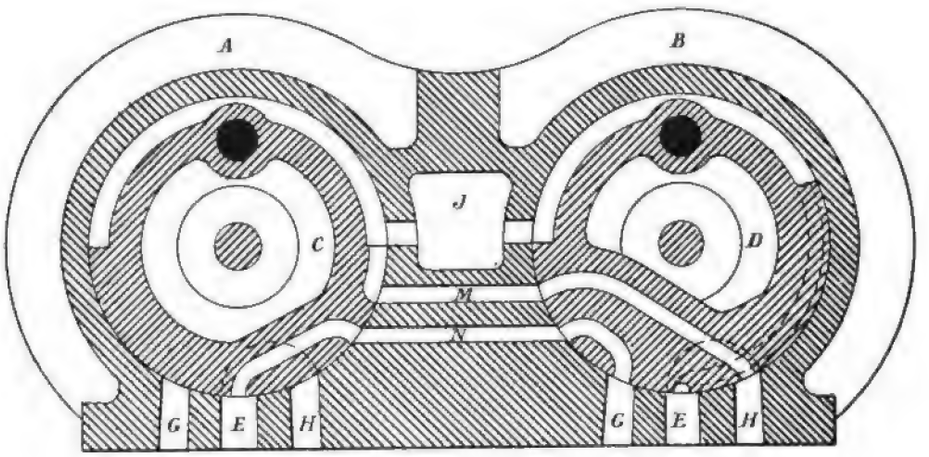

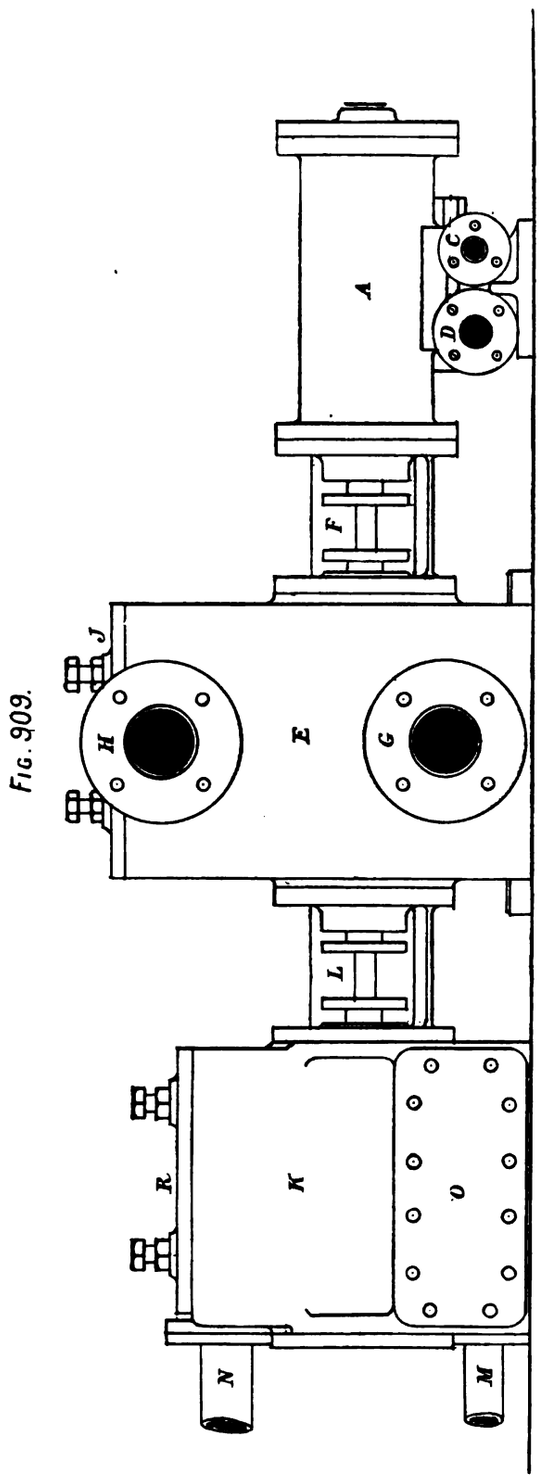

Fig. 909.

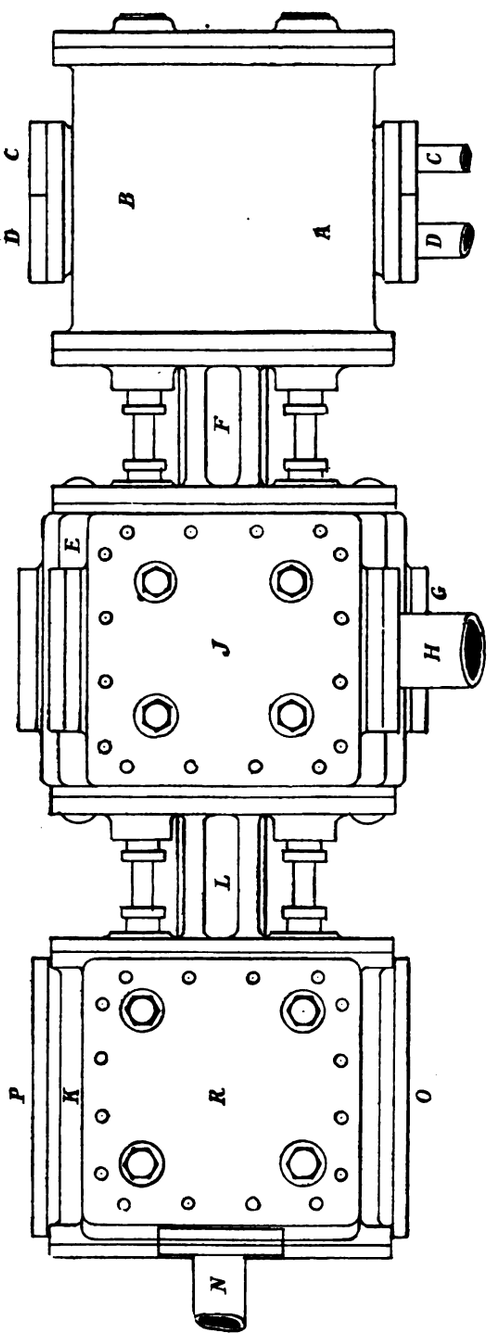

Fig. 910.

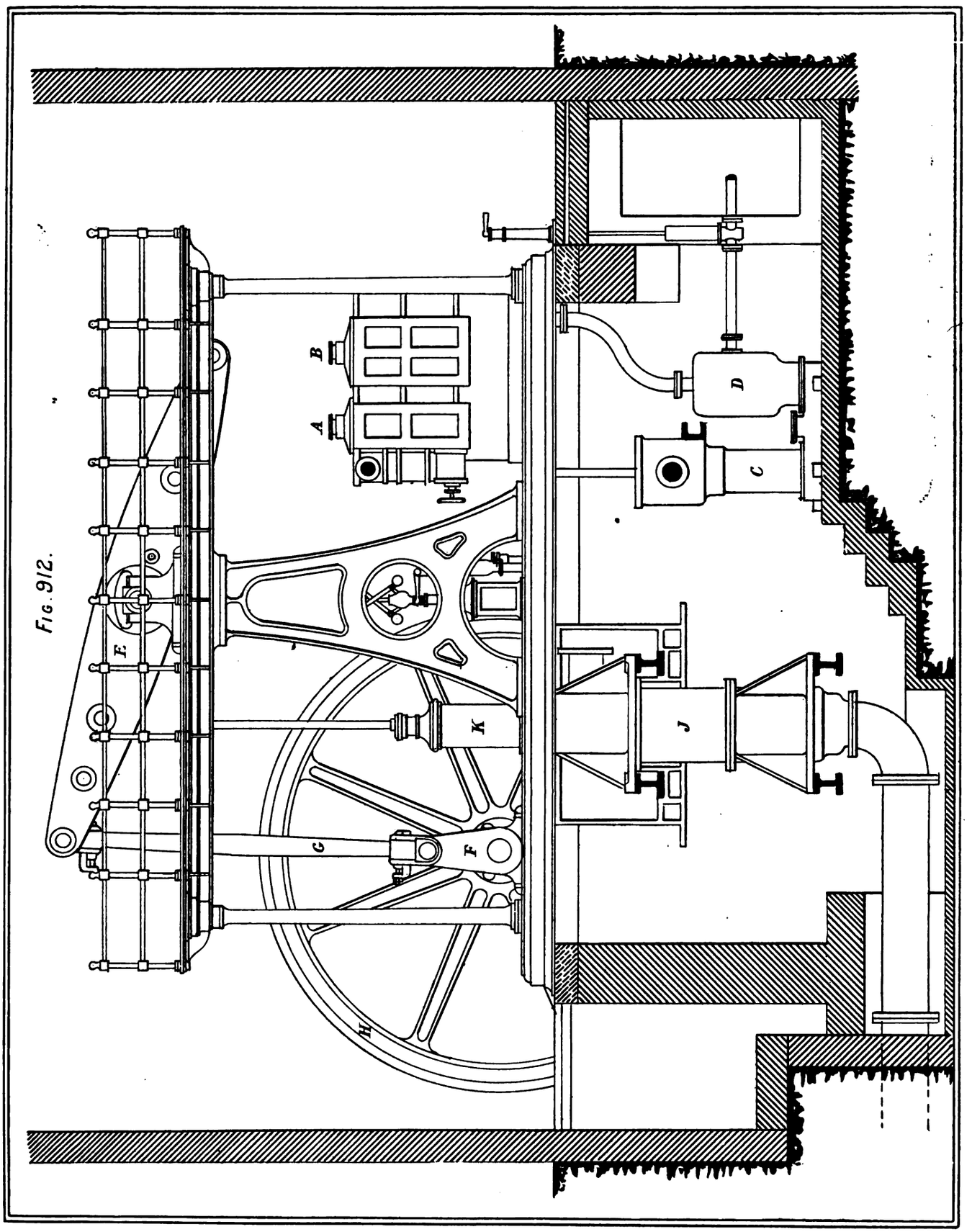

FIG. 912.

Fig 913

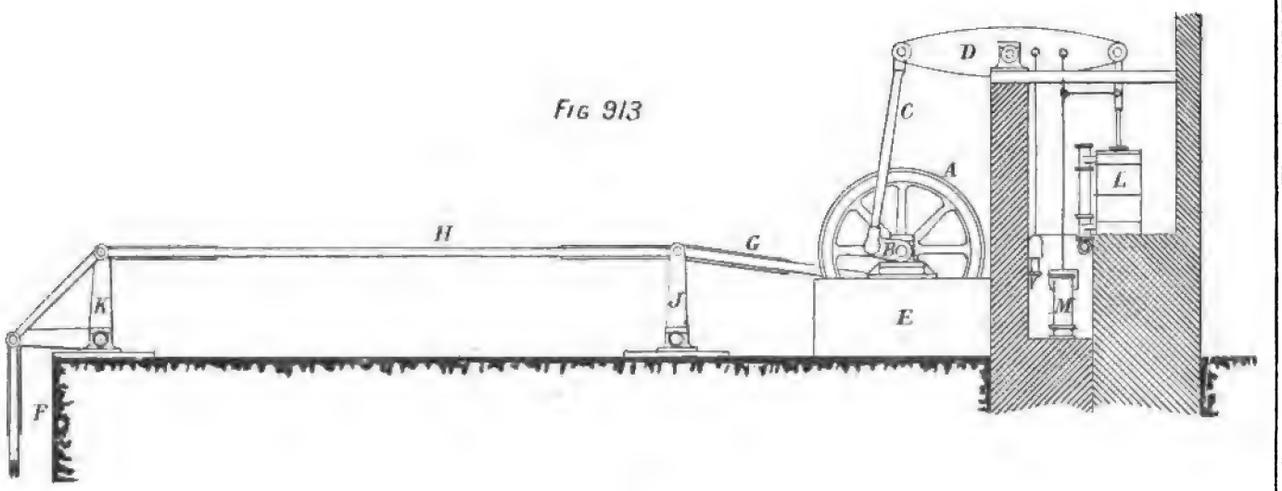

Fig 914.

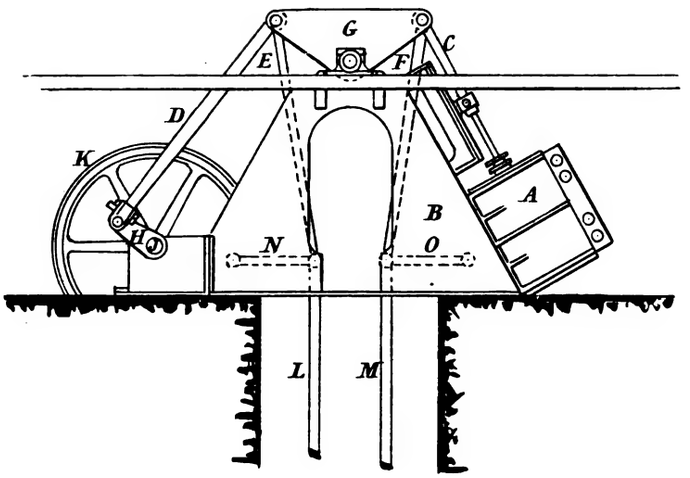

Fig. 915.

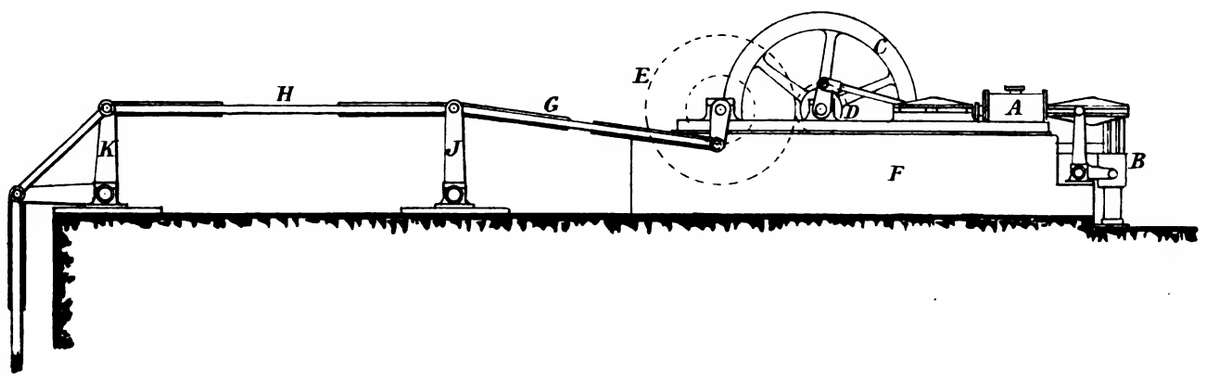

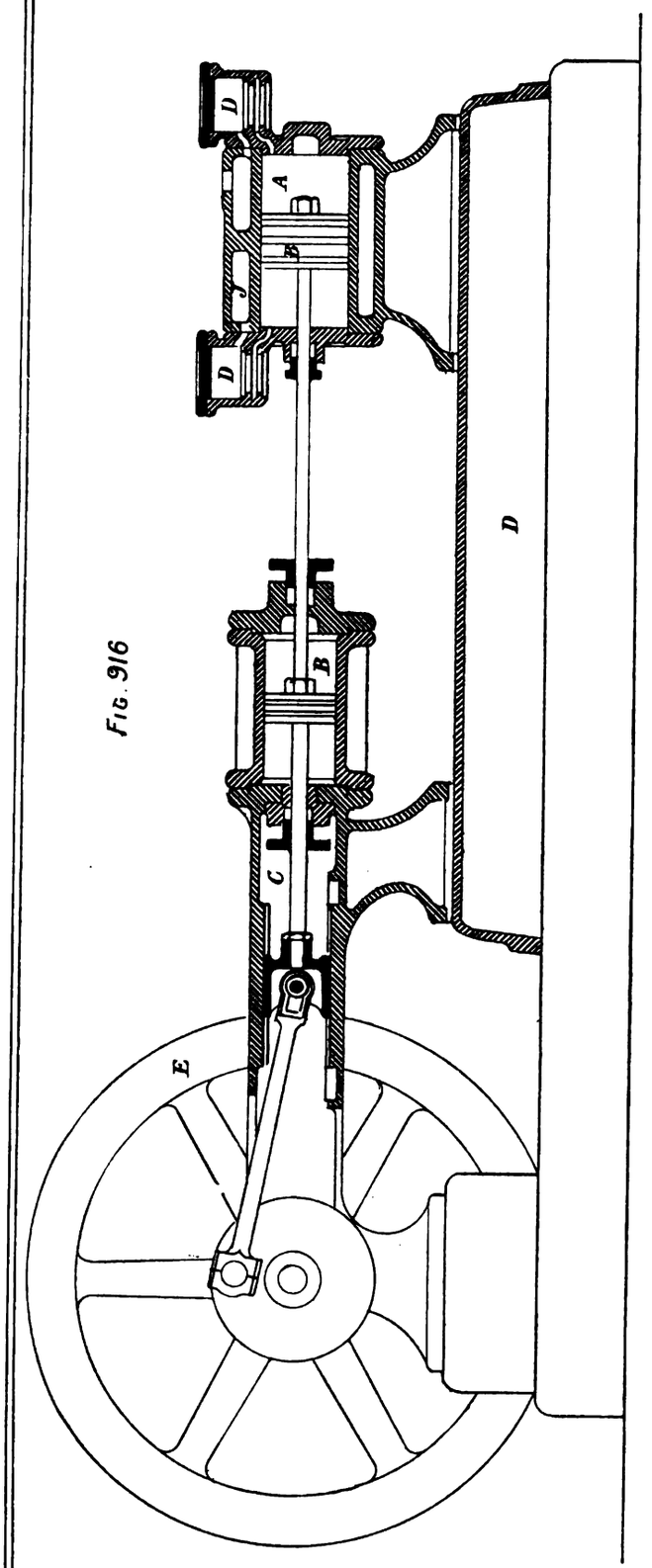

Fig. 916

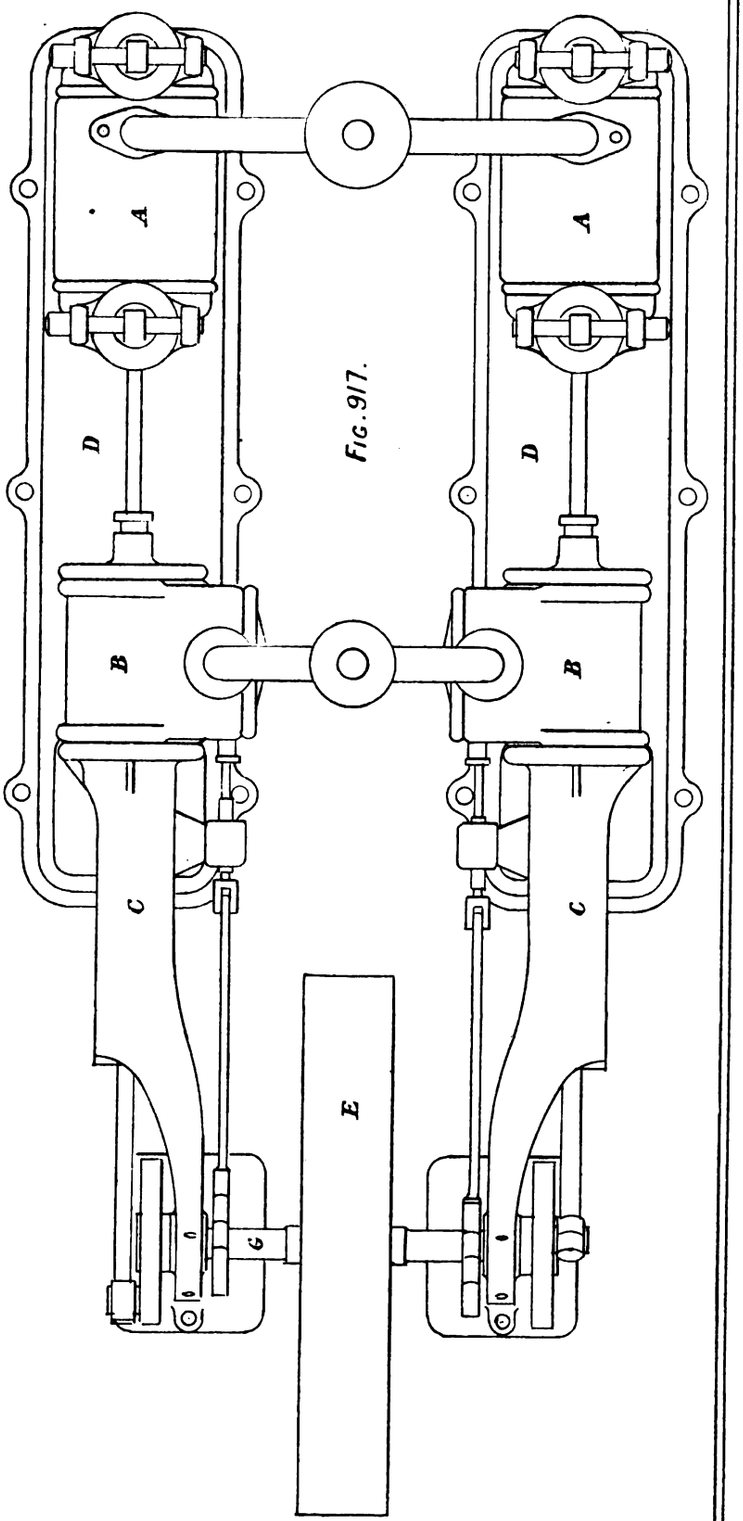

Fig. 917.

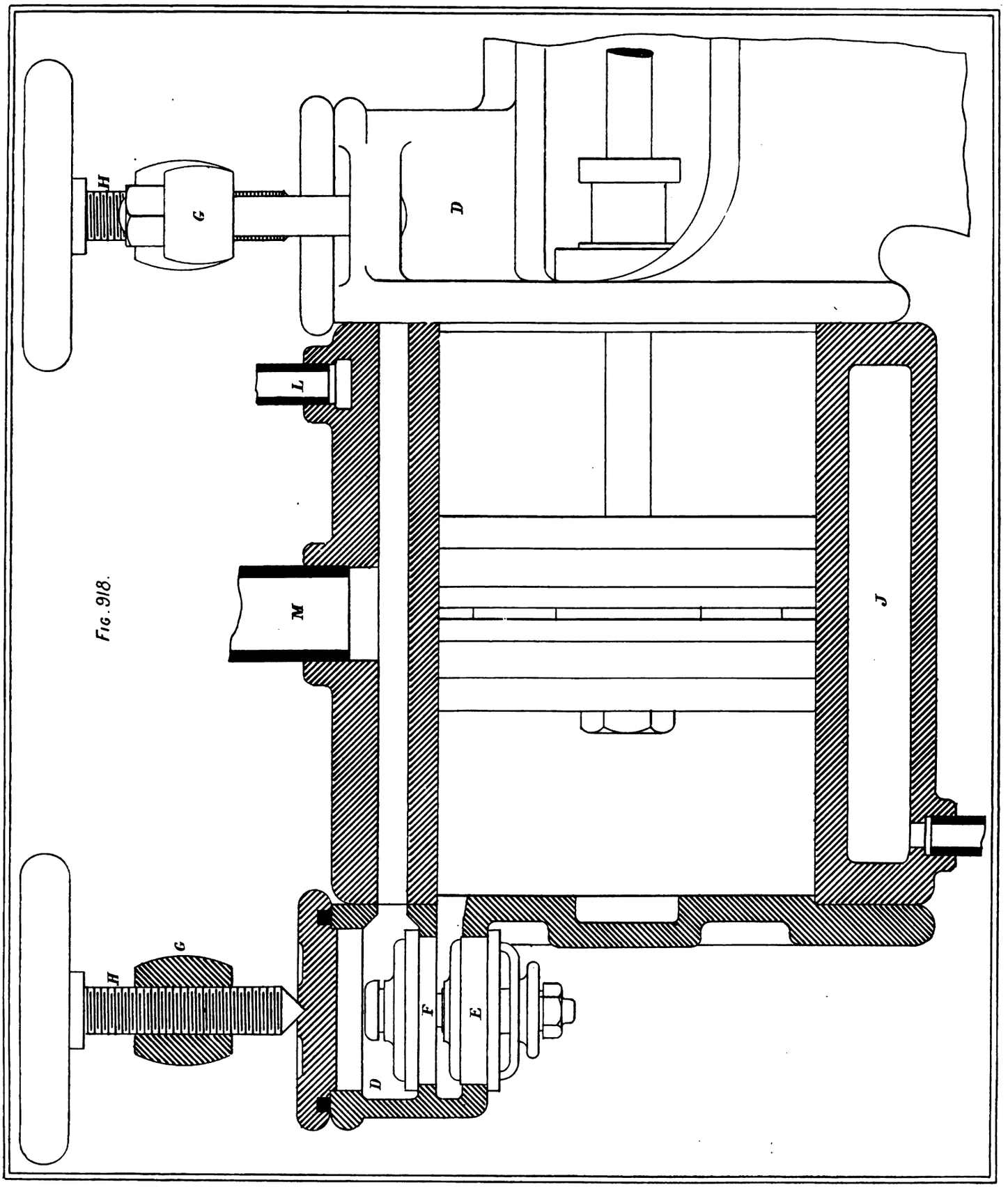

Fig. 918.

Fig 919.

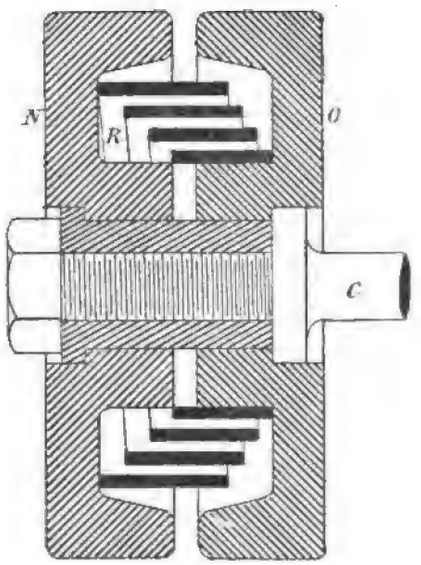

Fig. 920.

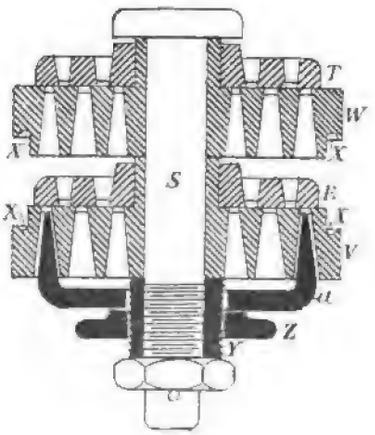

Fig: 921.

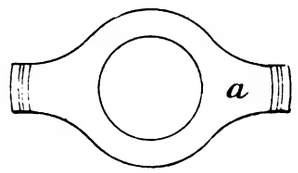

Fig. 922.

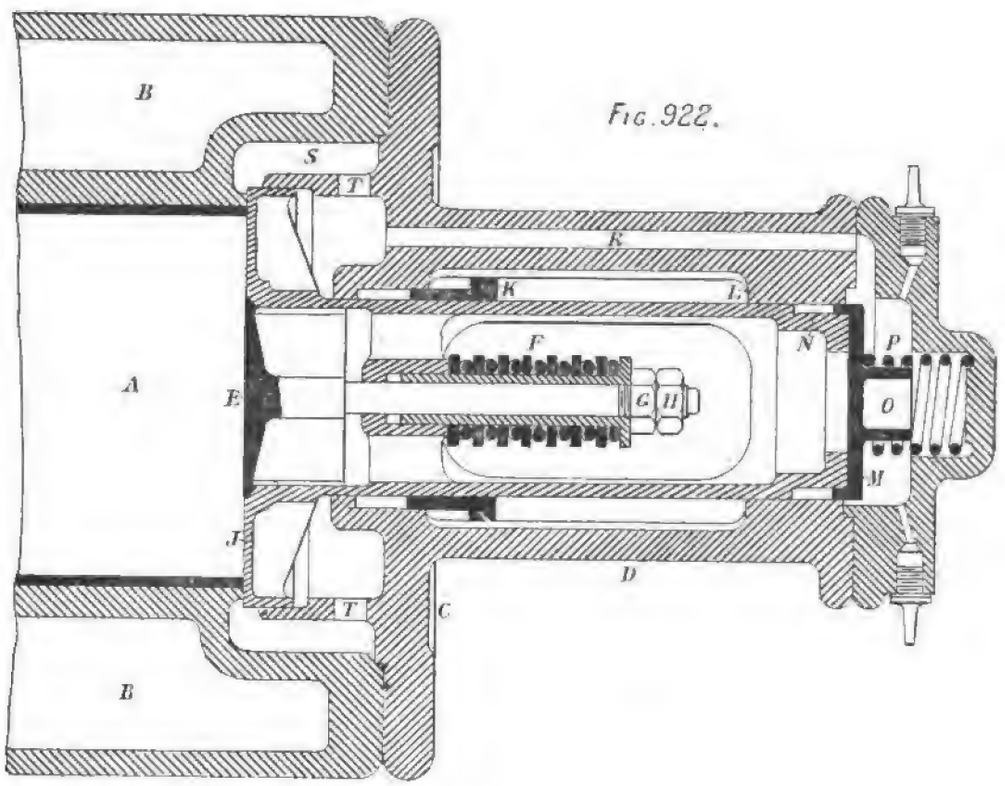

Fig 923

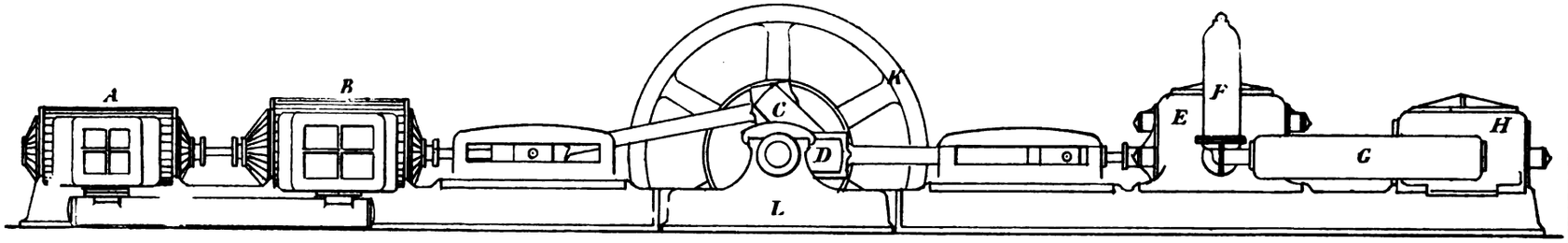

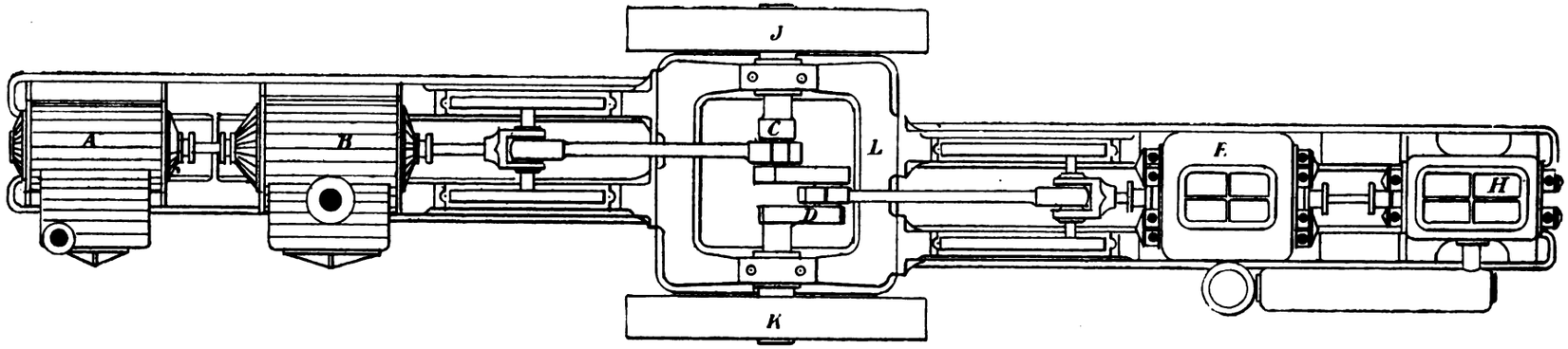

Fig. 924

Plate CCXIII.

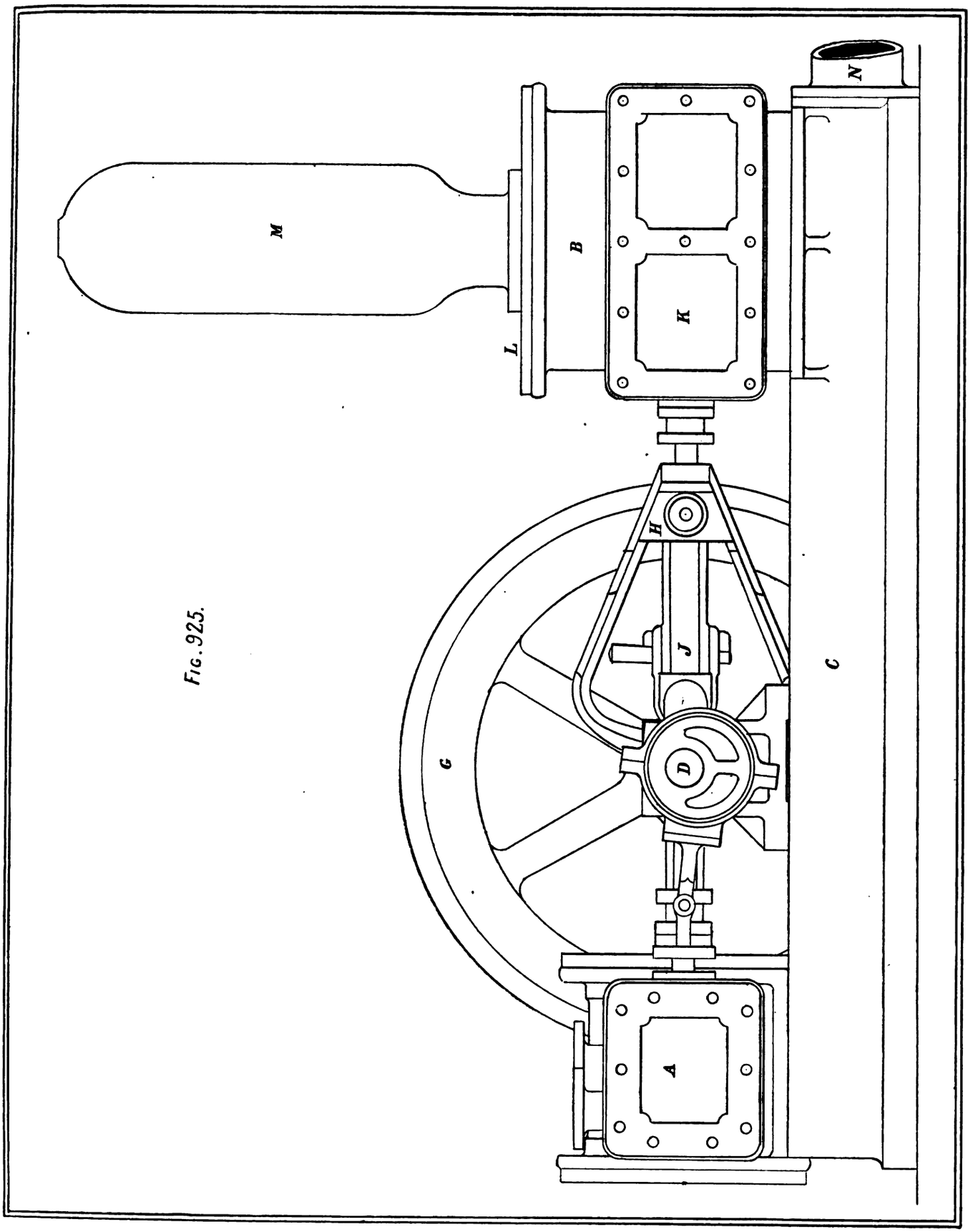

FIG. 925.

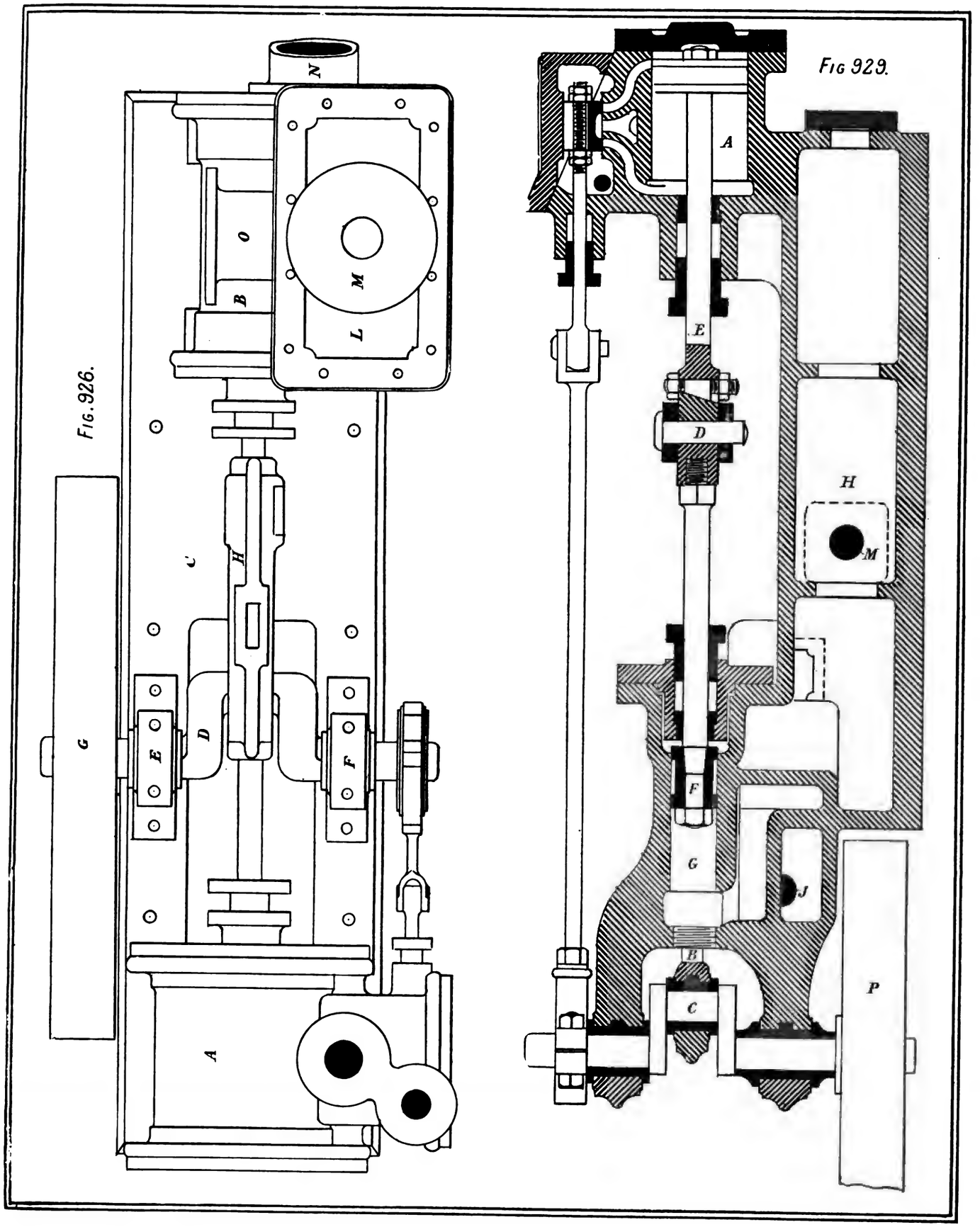
Fig. 926.
N
O
B
M
L
H
G
E
D
F
A
Fig 929.
A
E
D
H
M
F
G
J
B
C
P

Fig. 927.

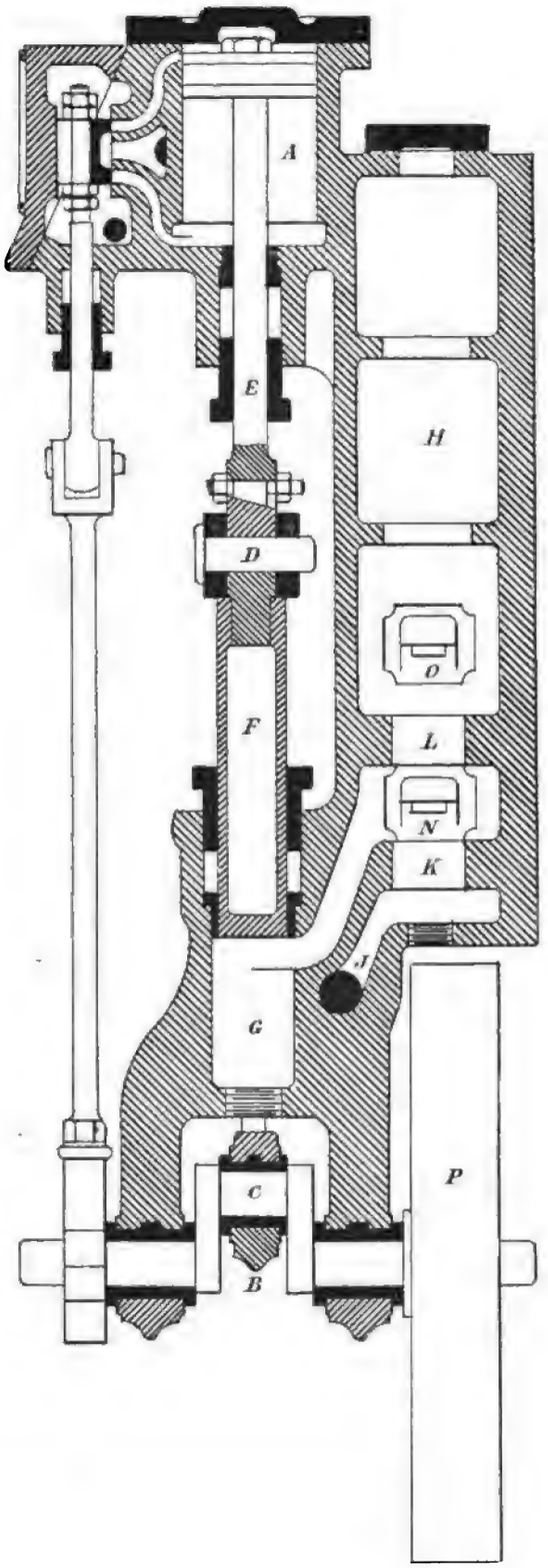

Fig. 928.

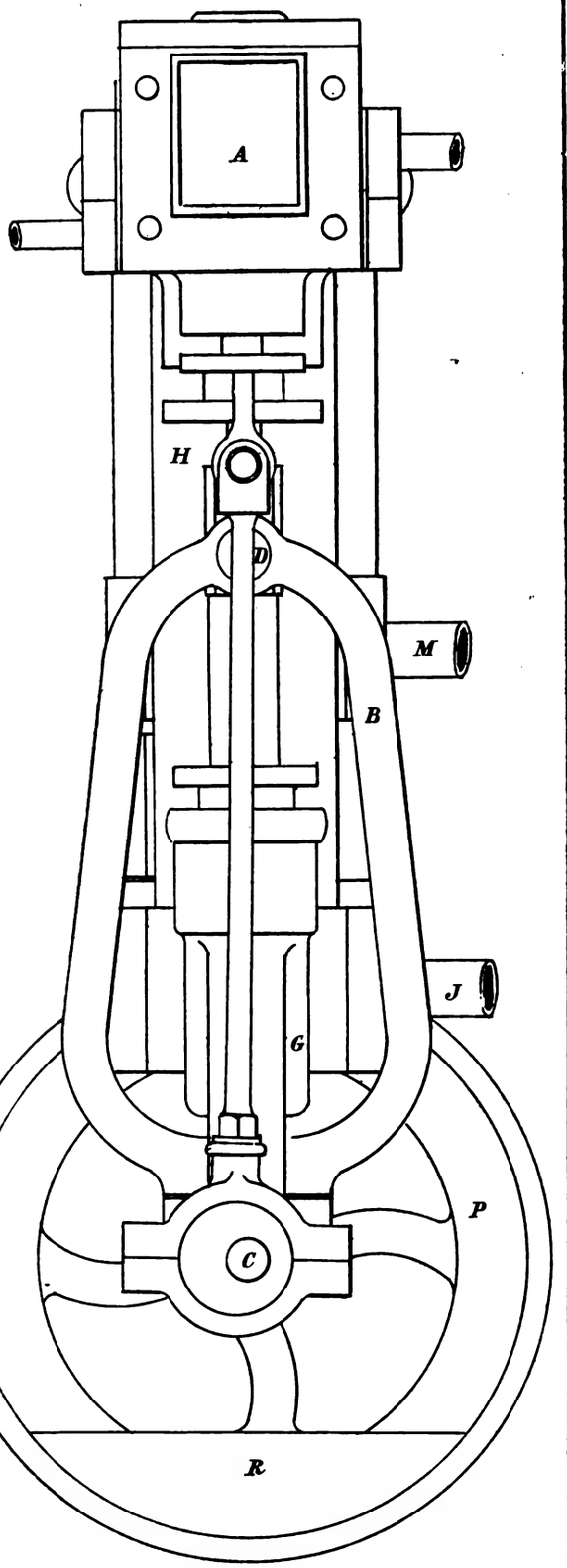

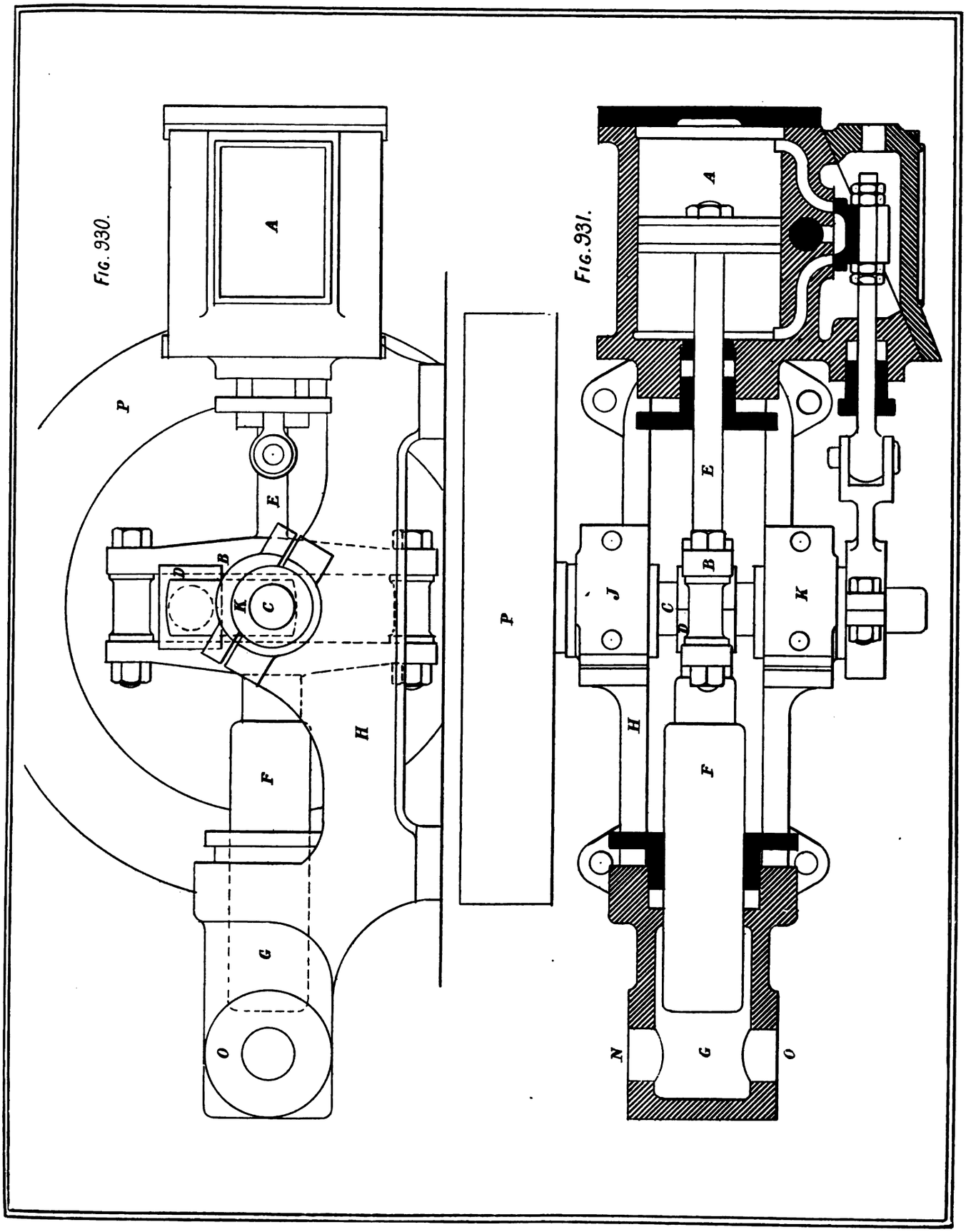
Fig. 930.
A
P
E
B
D
K
C
F
H
G
O
P
Fig. 931.
A
E
J
B
C
D
K
H
F
N
G
O

FIG. 933.

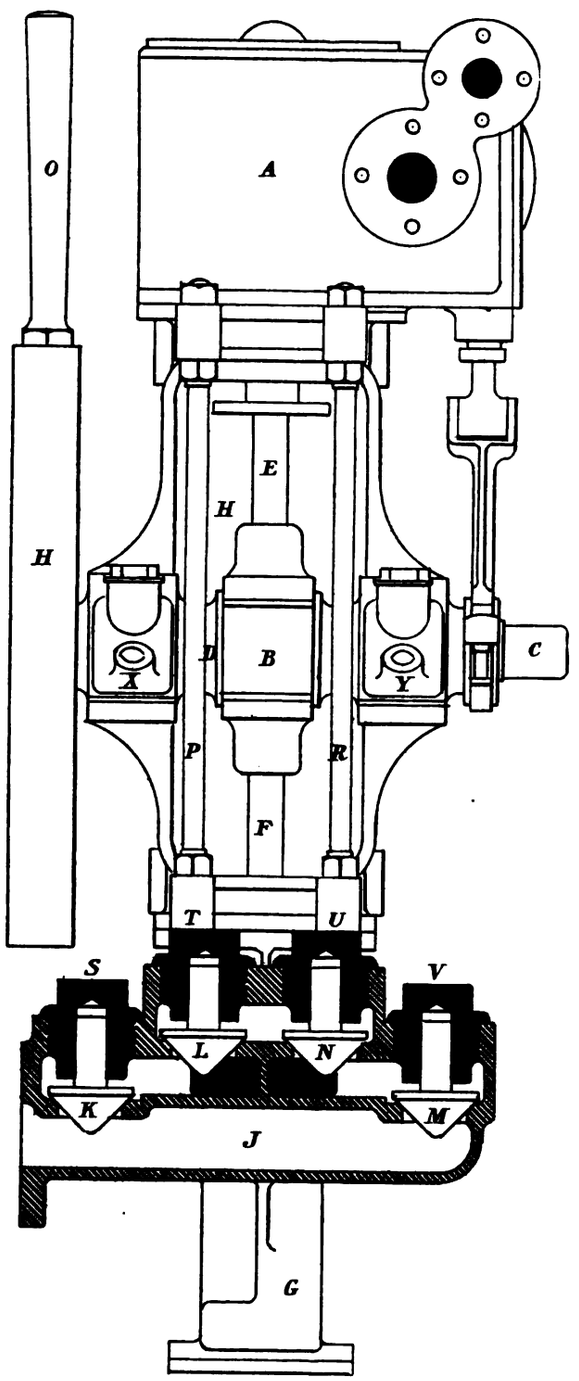

FIG. 932

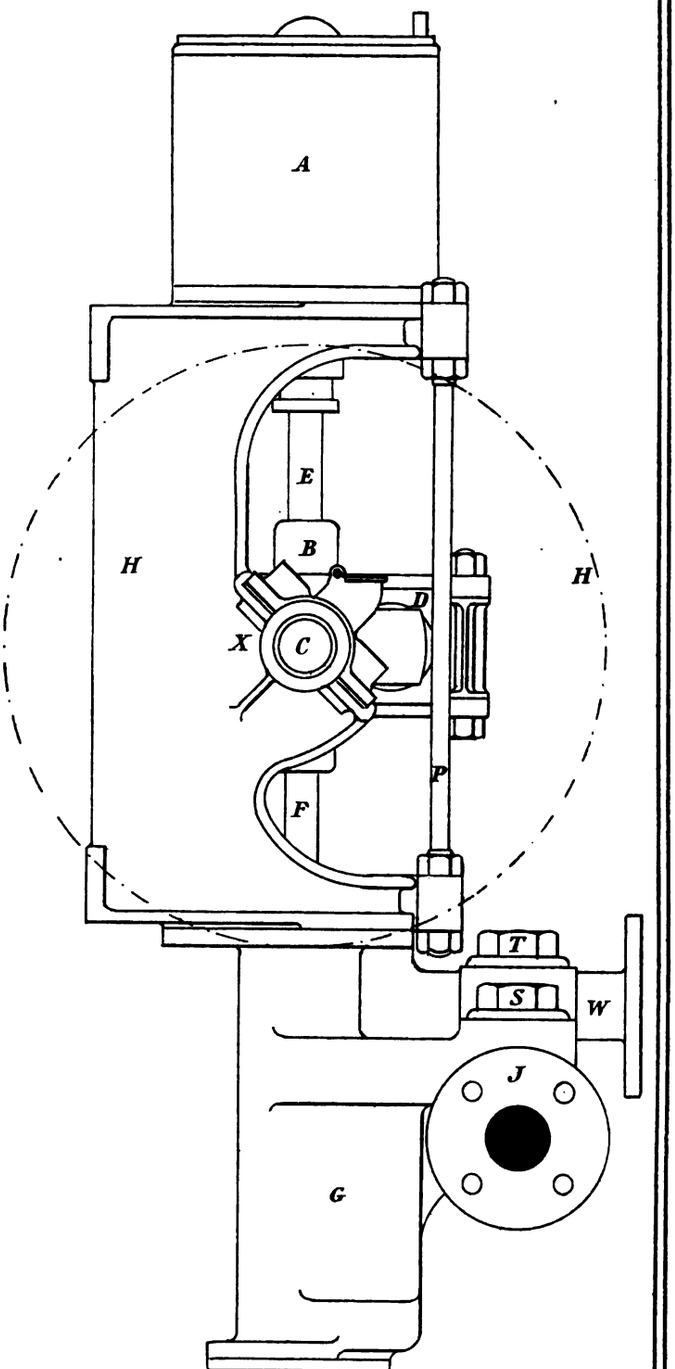

FIG. 935.

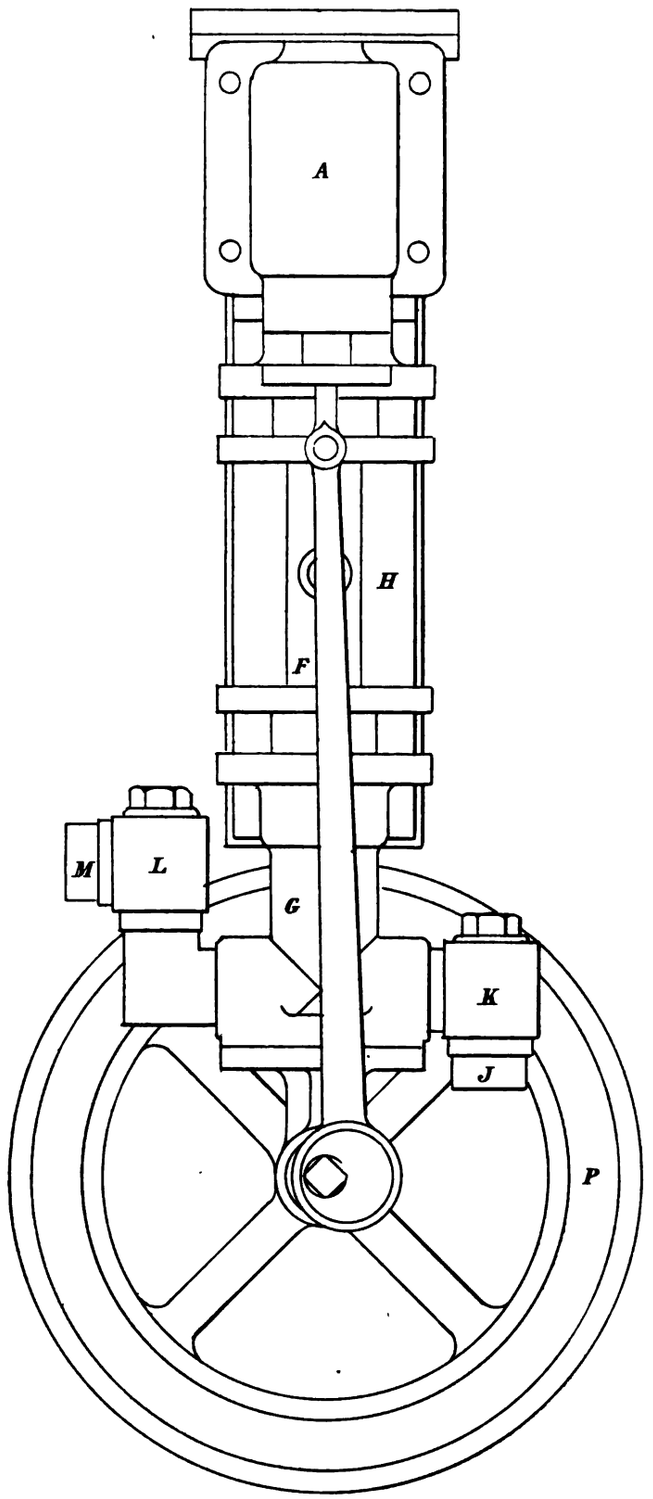

FIG. 934.

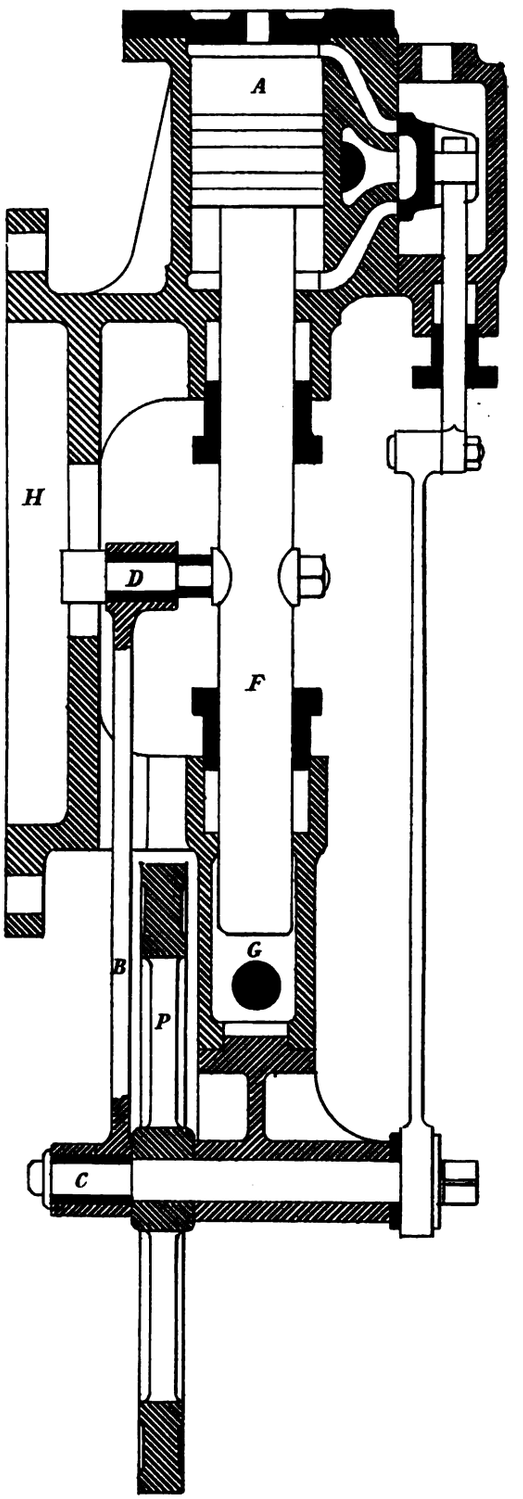

FIG 937.

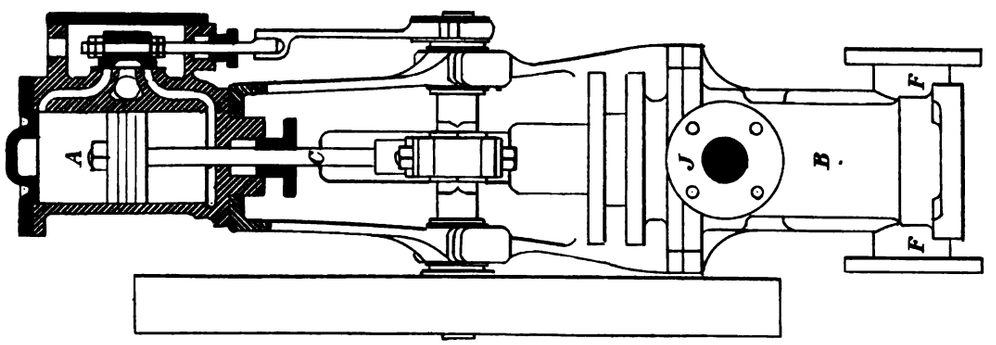

FIG.936.

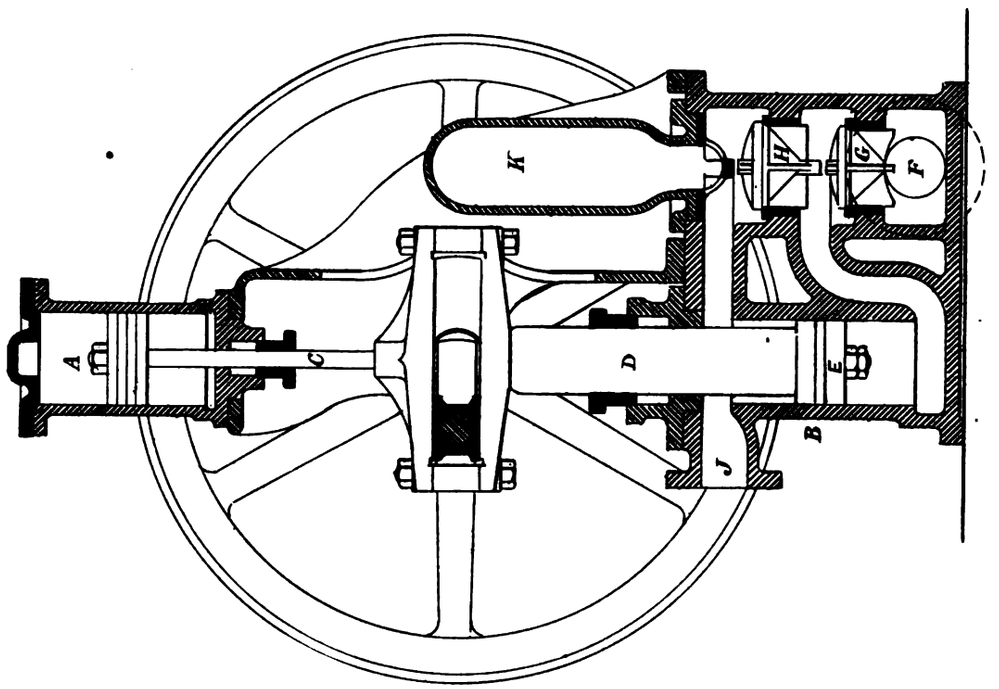

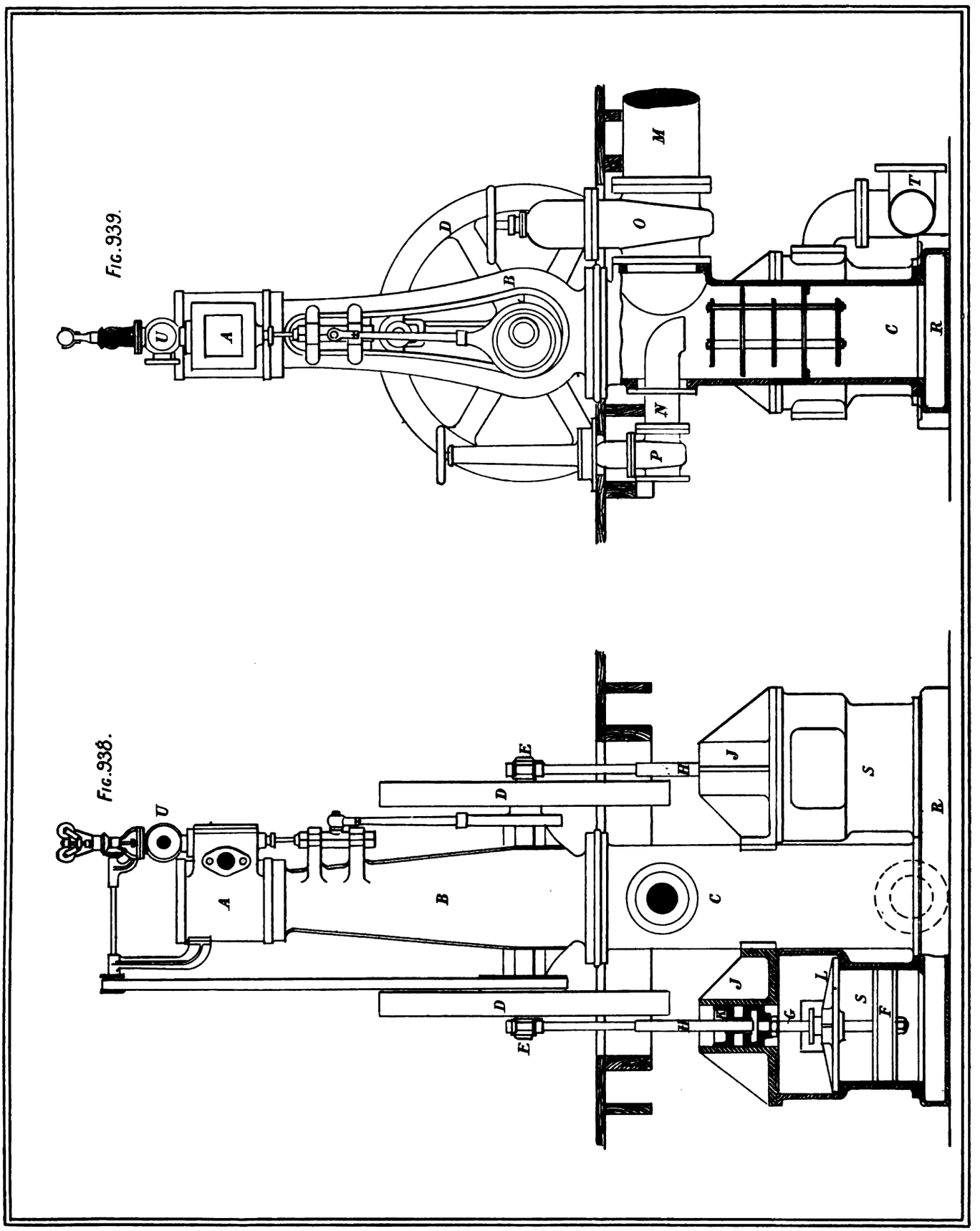
Fig. 939.
Fig. 938.
A
B
C
D
E
F
G
H
J
K
L
M
N
O
P
R
S
T
U

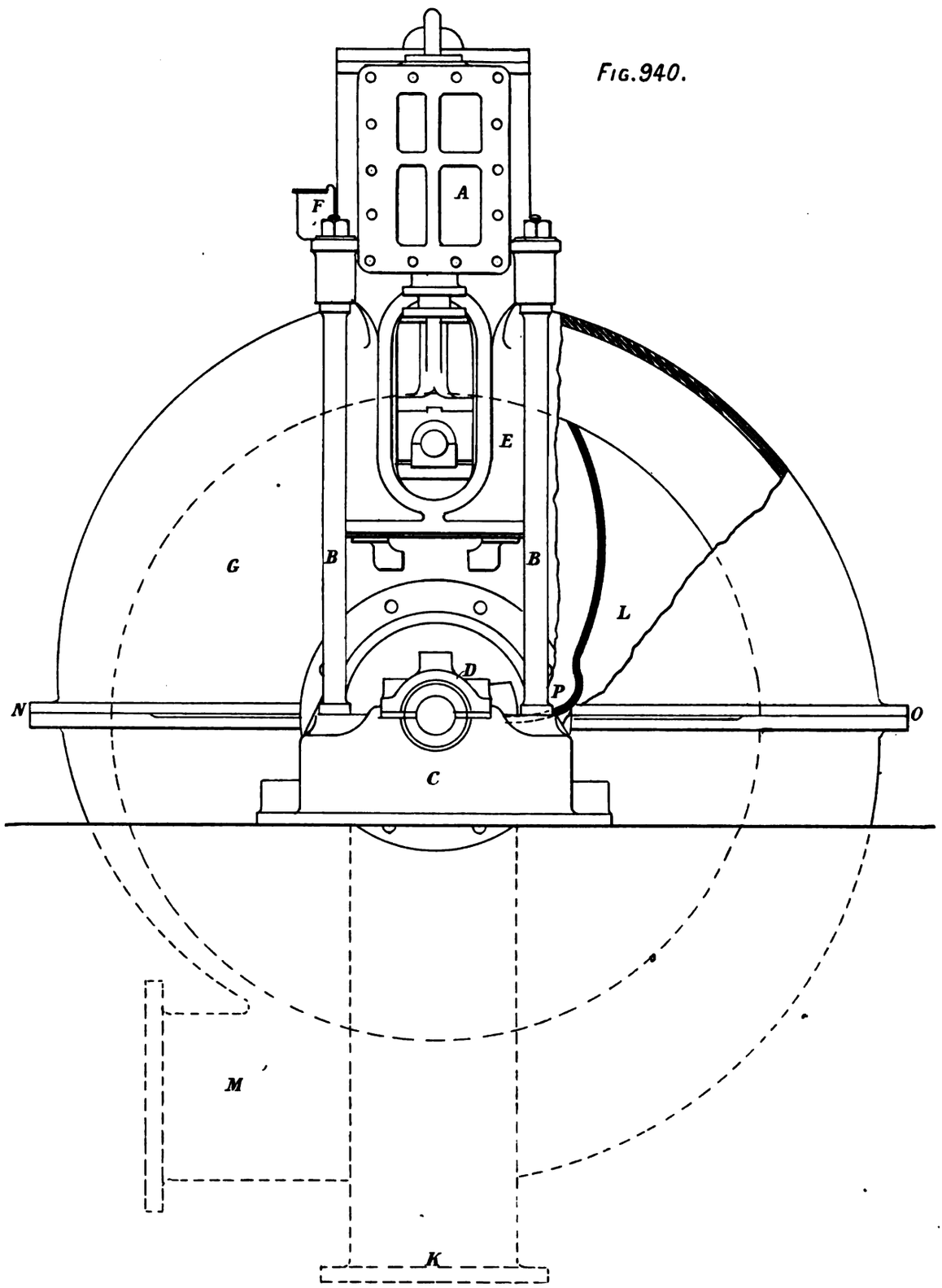

Fig. 940.

Fig. 941.

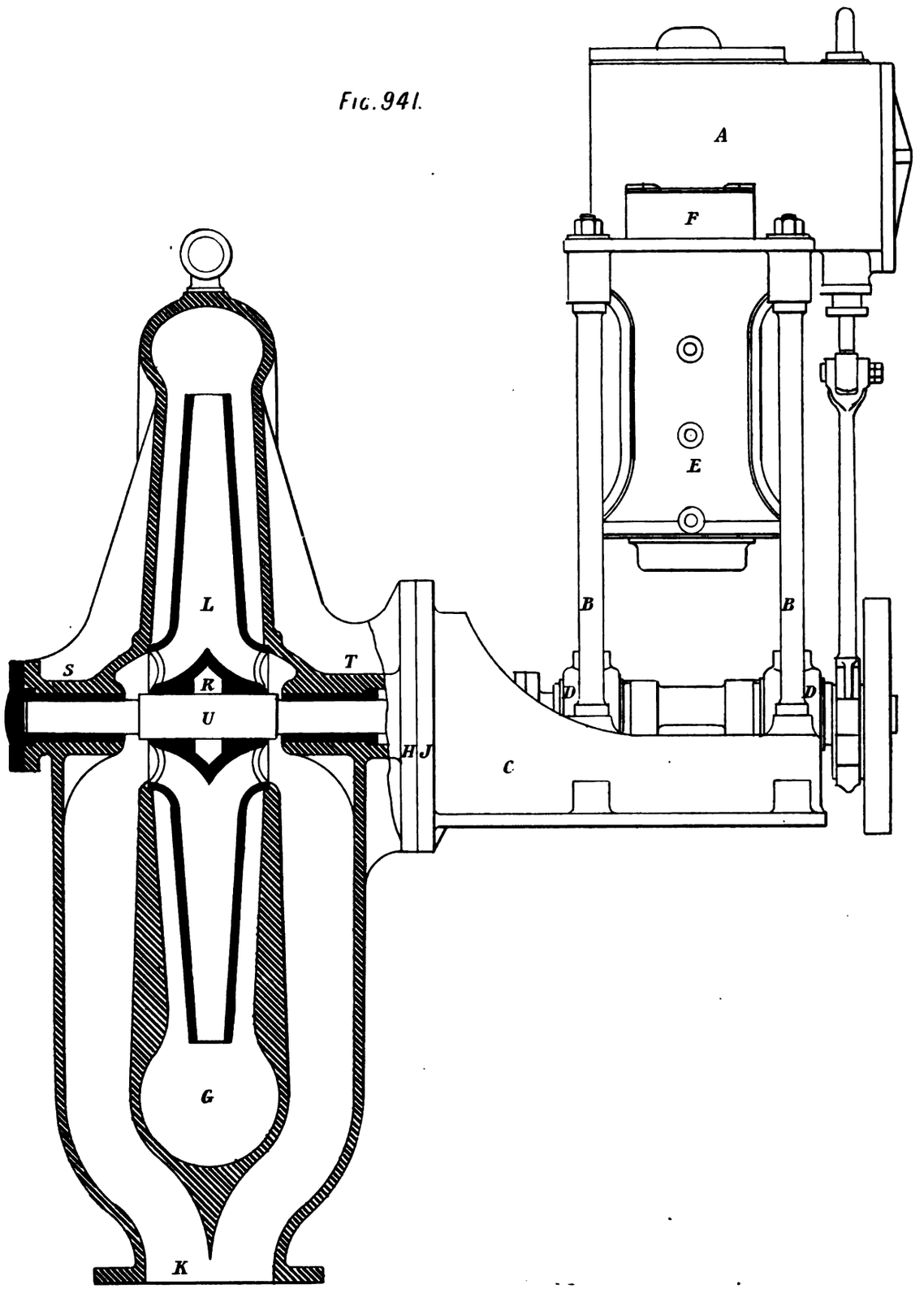

Fig. 942.

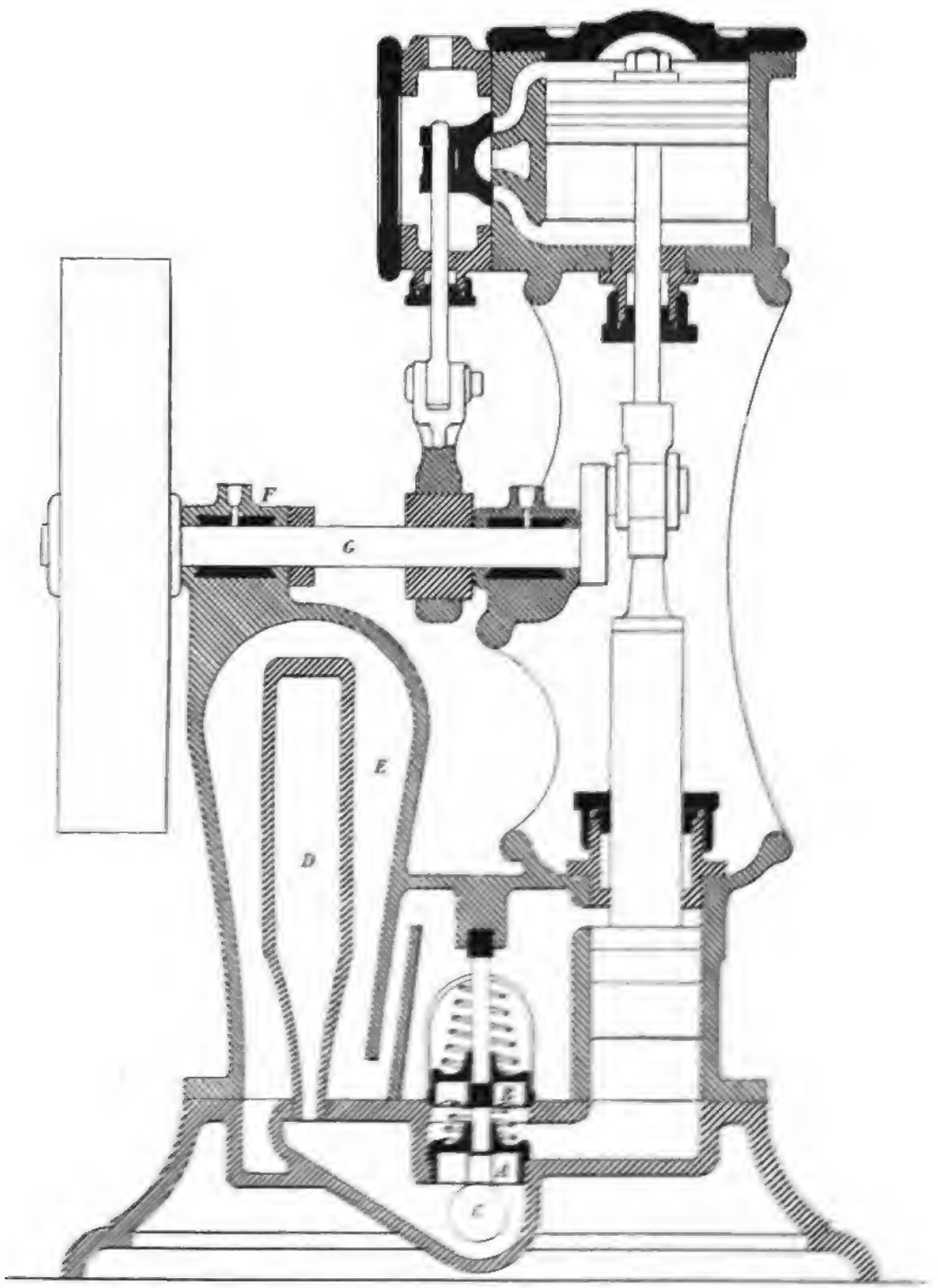

Fig. 943.

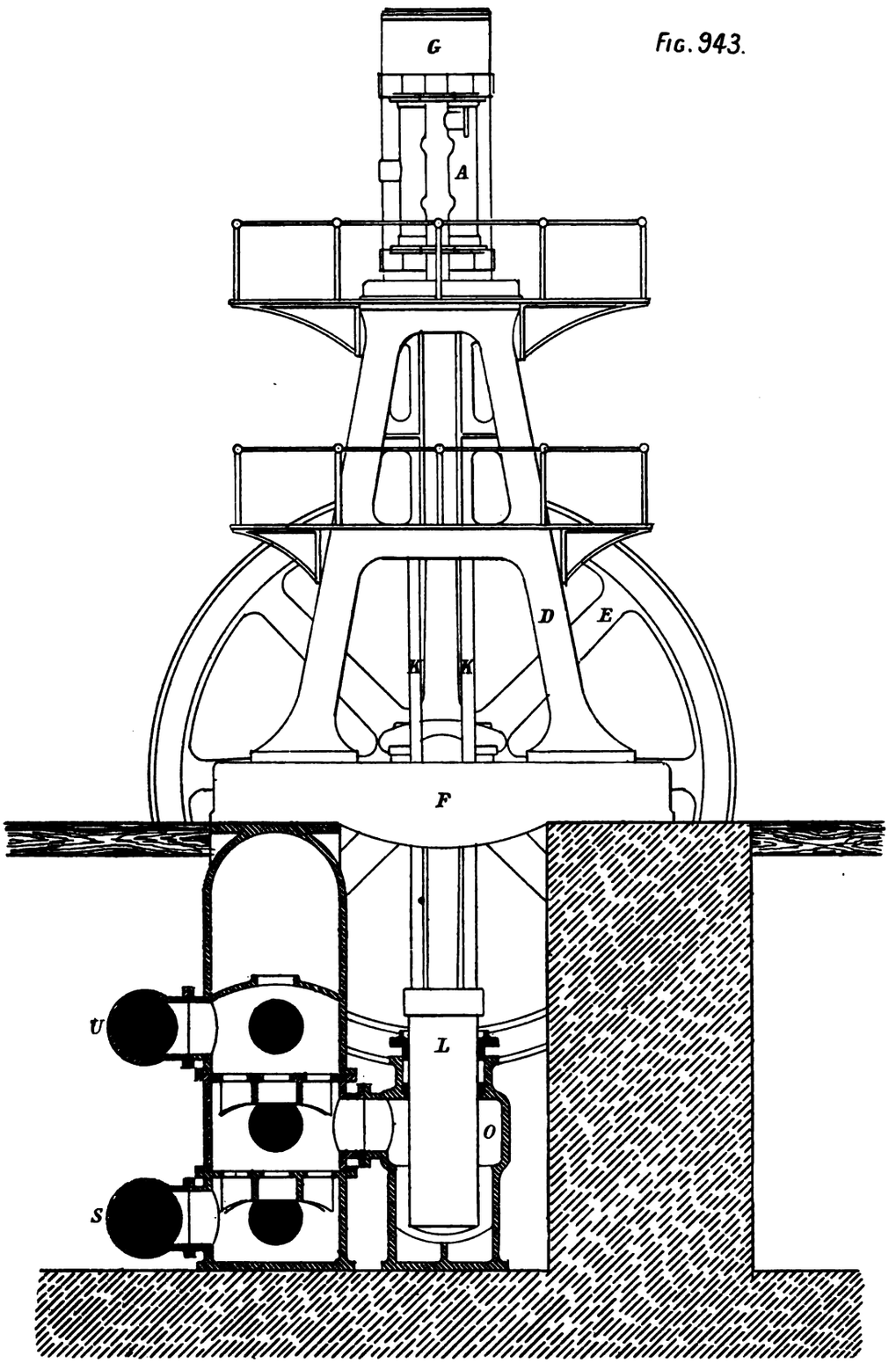

Fig. 944

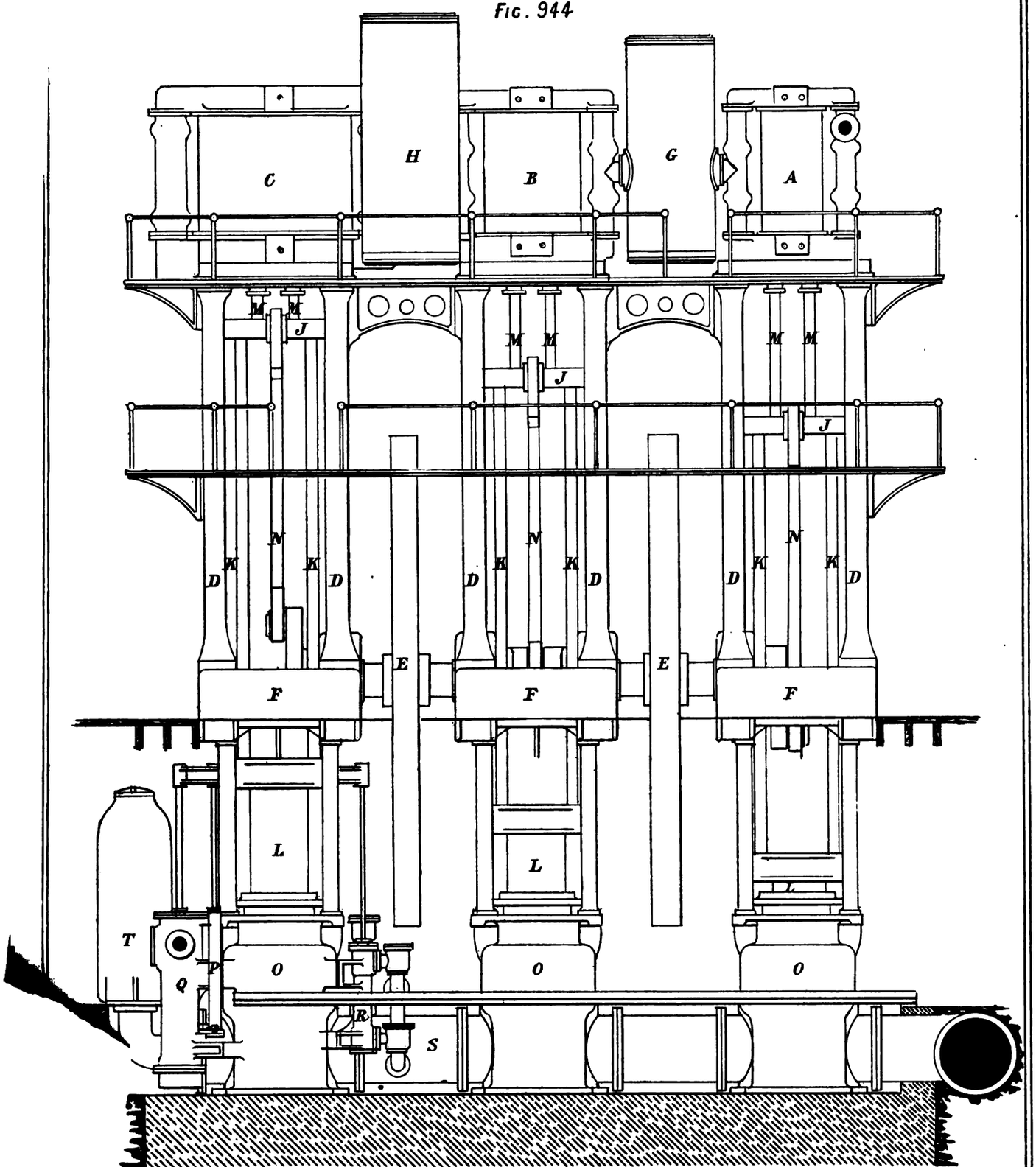

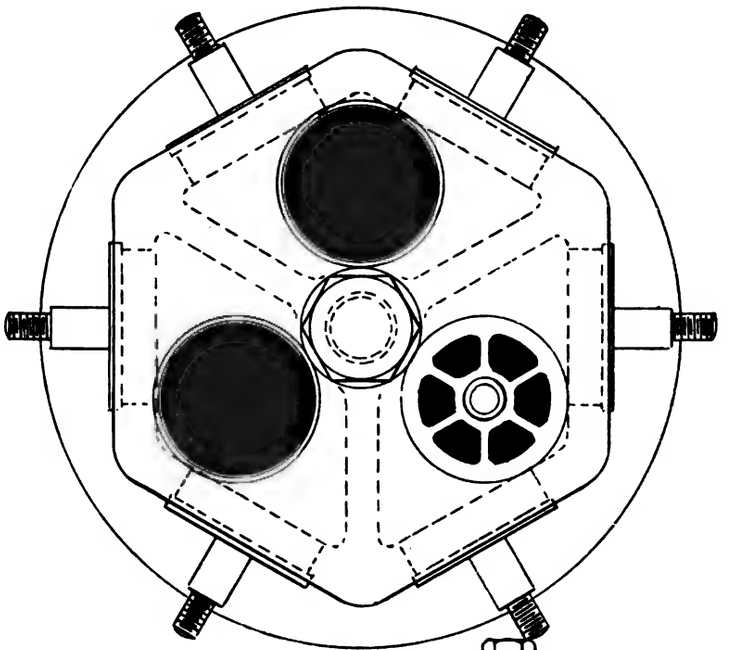

Fig.946.

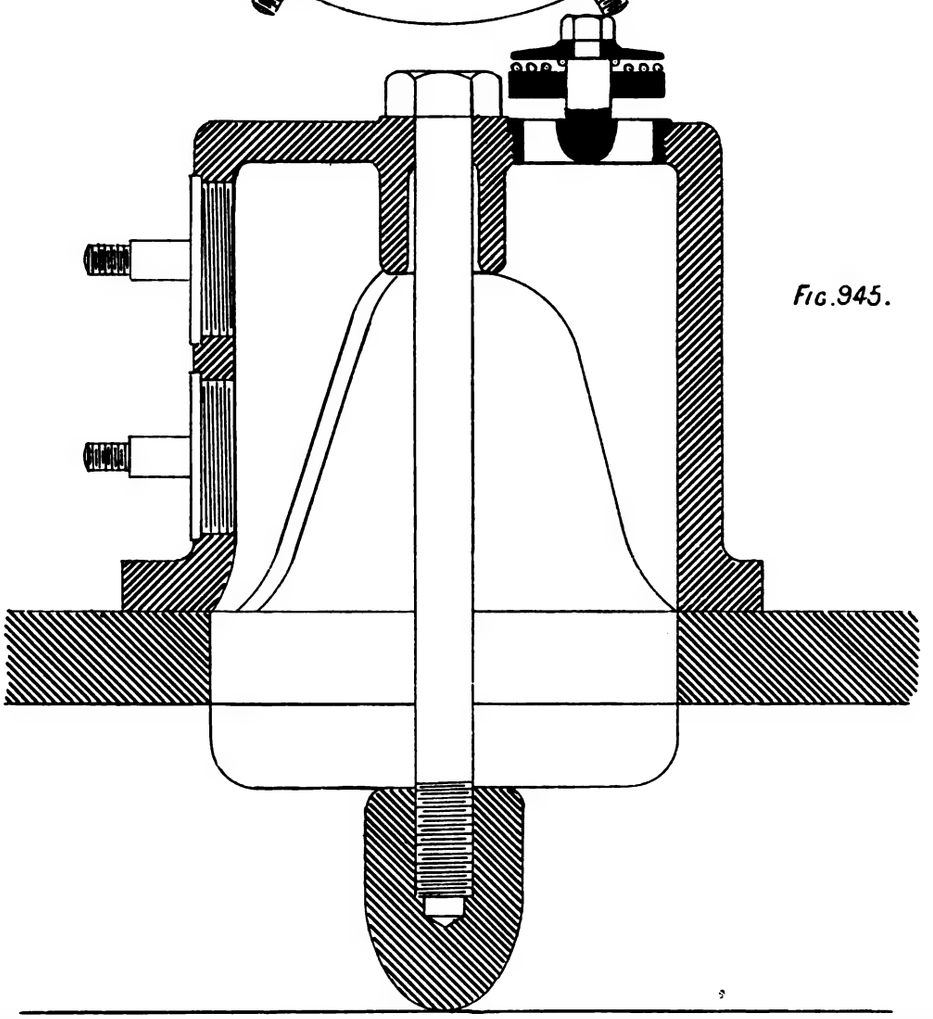

Fig.945.

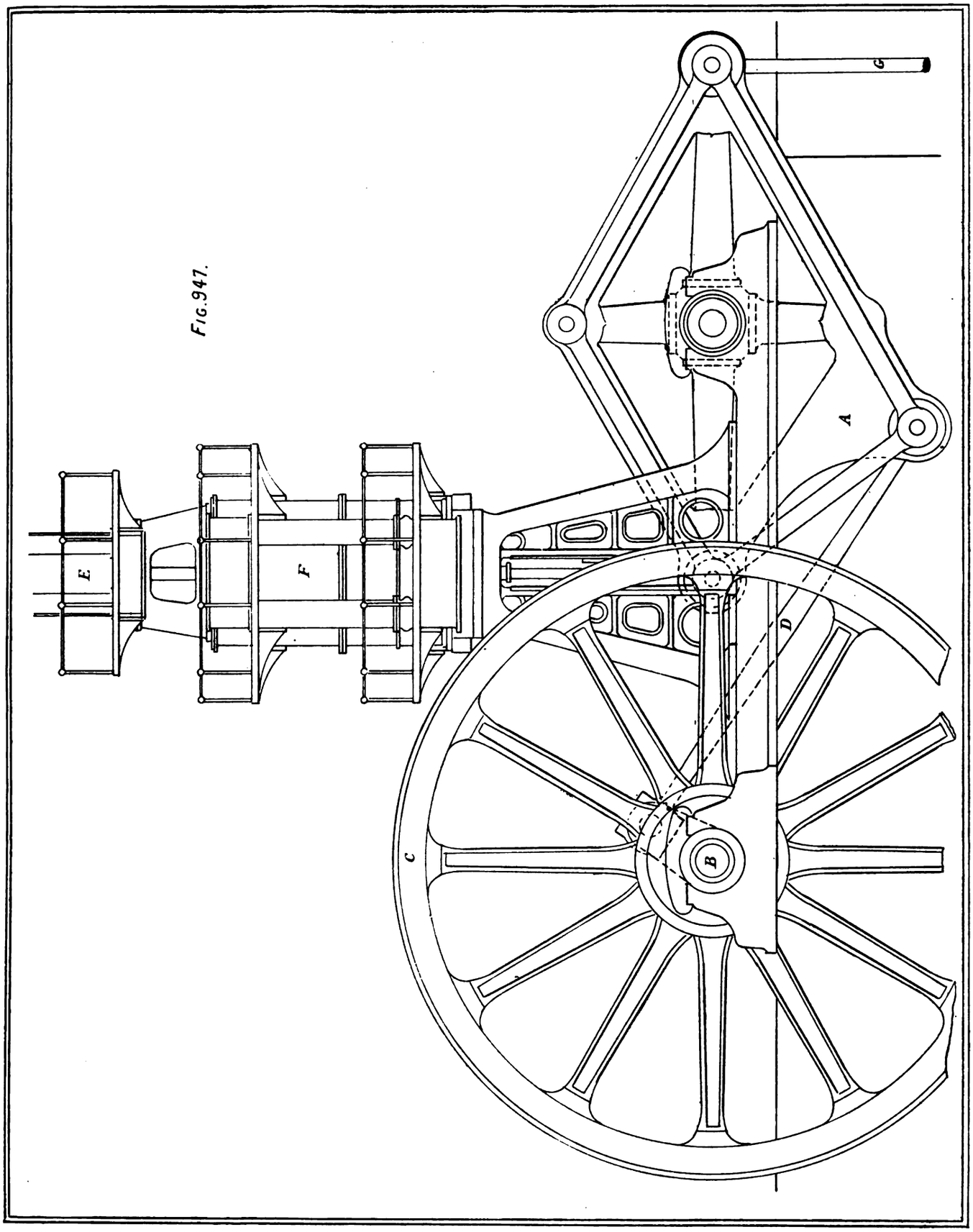

FIG. 947.

Fig. 948.

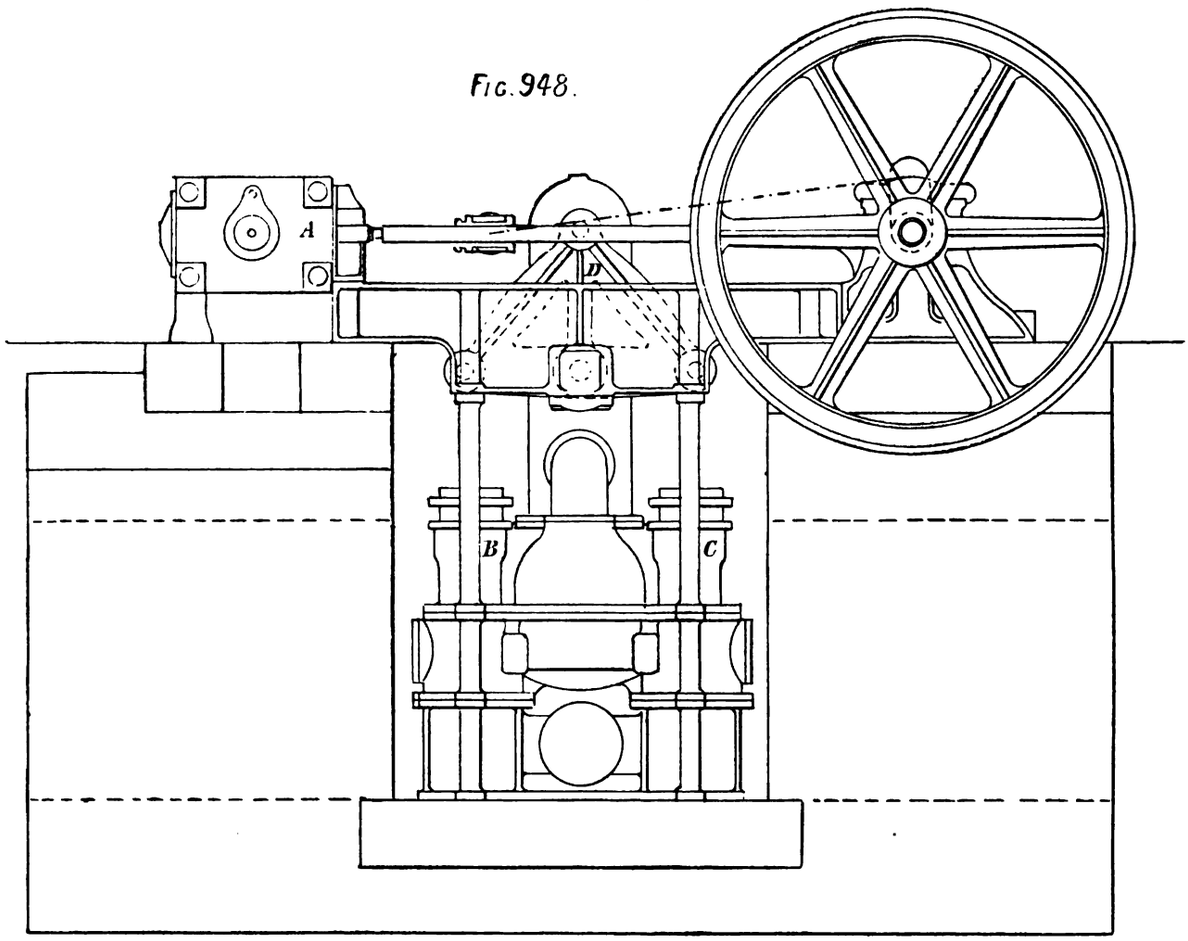

Fig. 949.

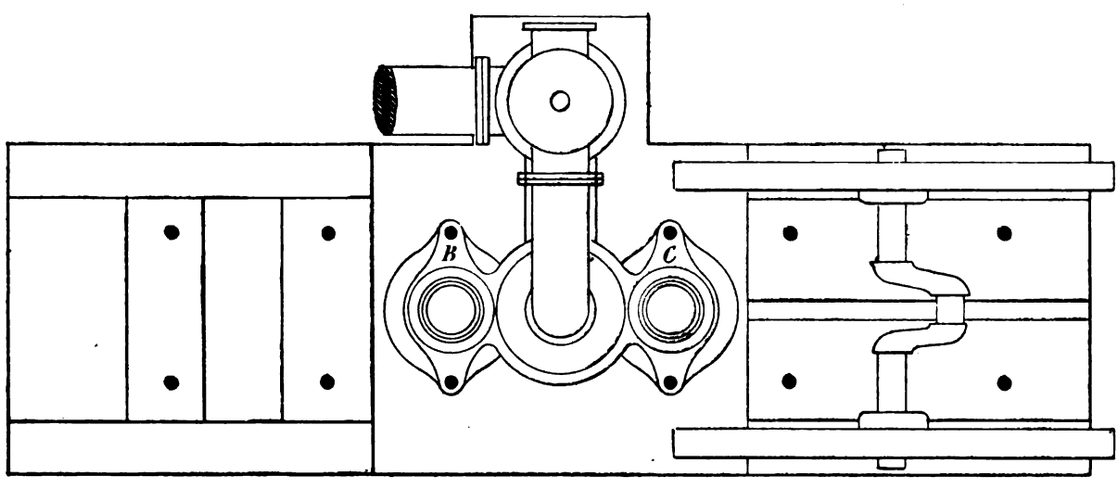

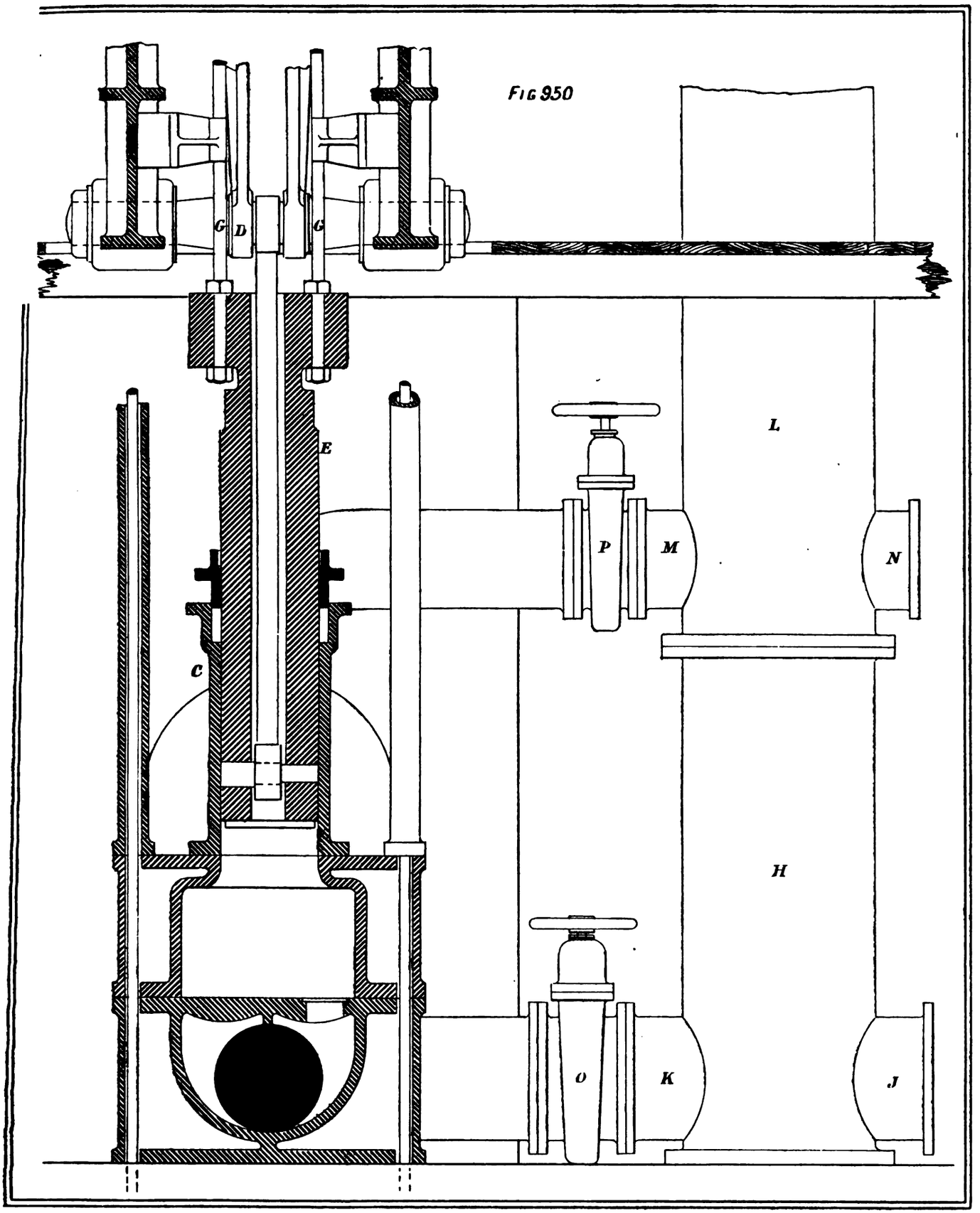
Fig 950
G
D
G
E
C
L
P
M
N
H
O
K
J

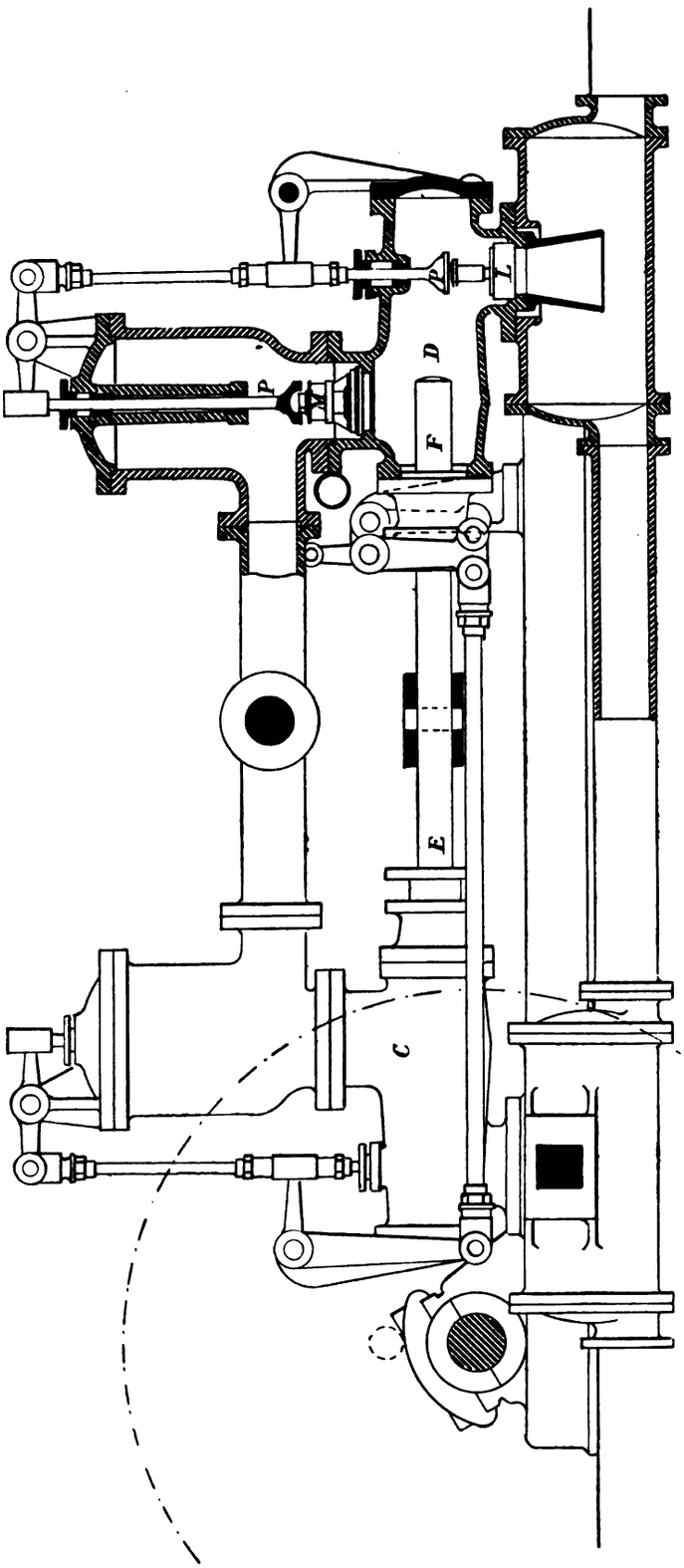

Fig. 951.

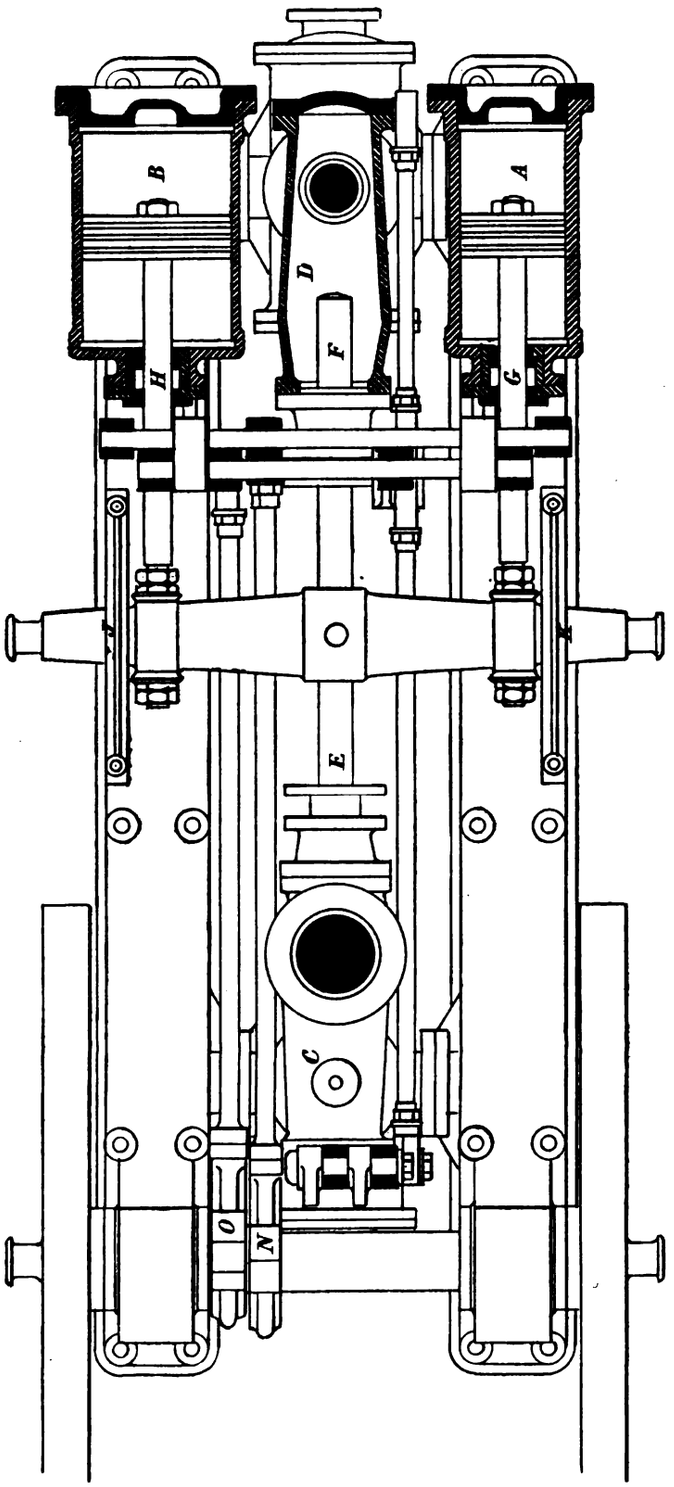

FIG. 952.

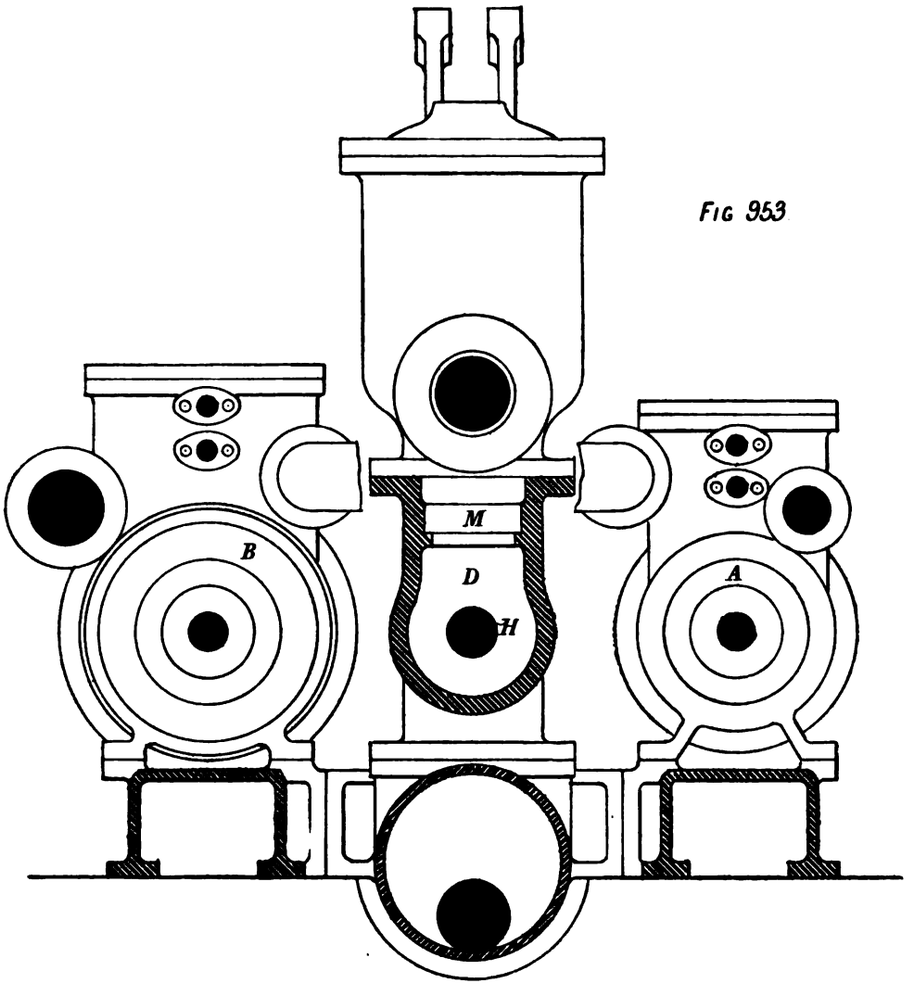

Fig 953

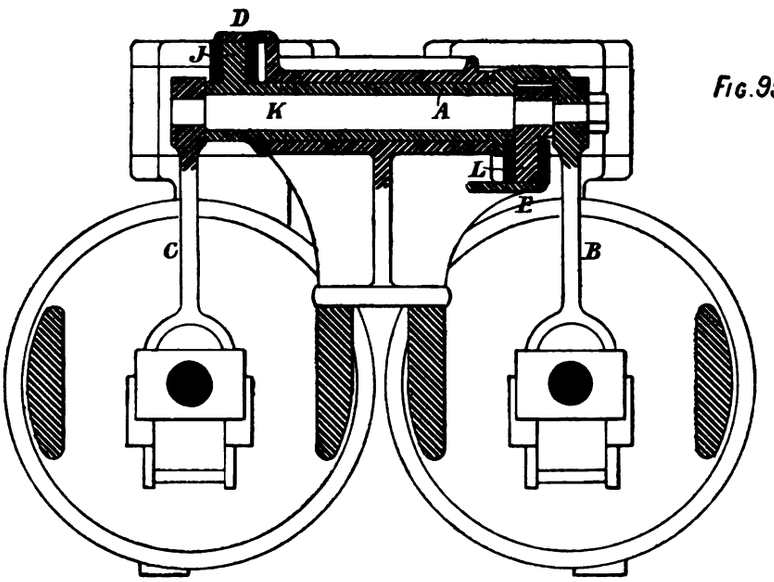

Fig.955.

Plate CCXXXIV.

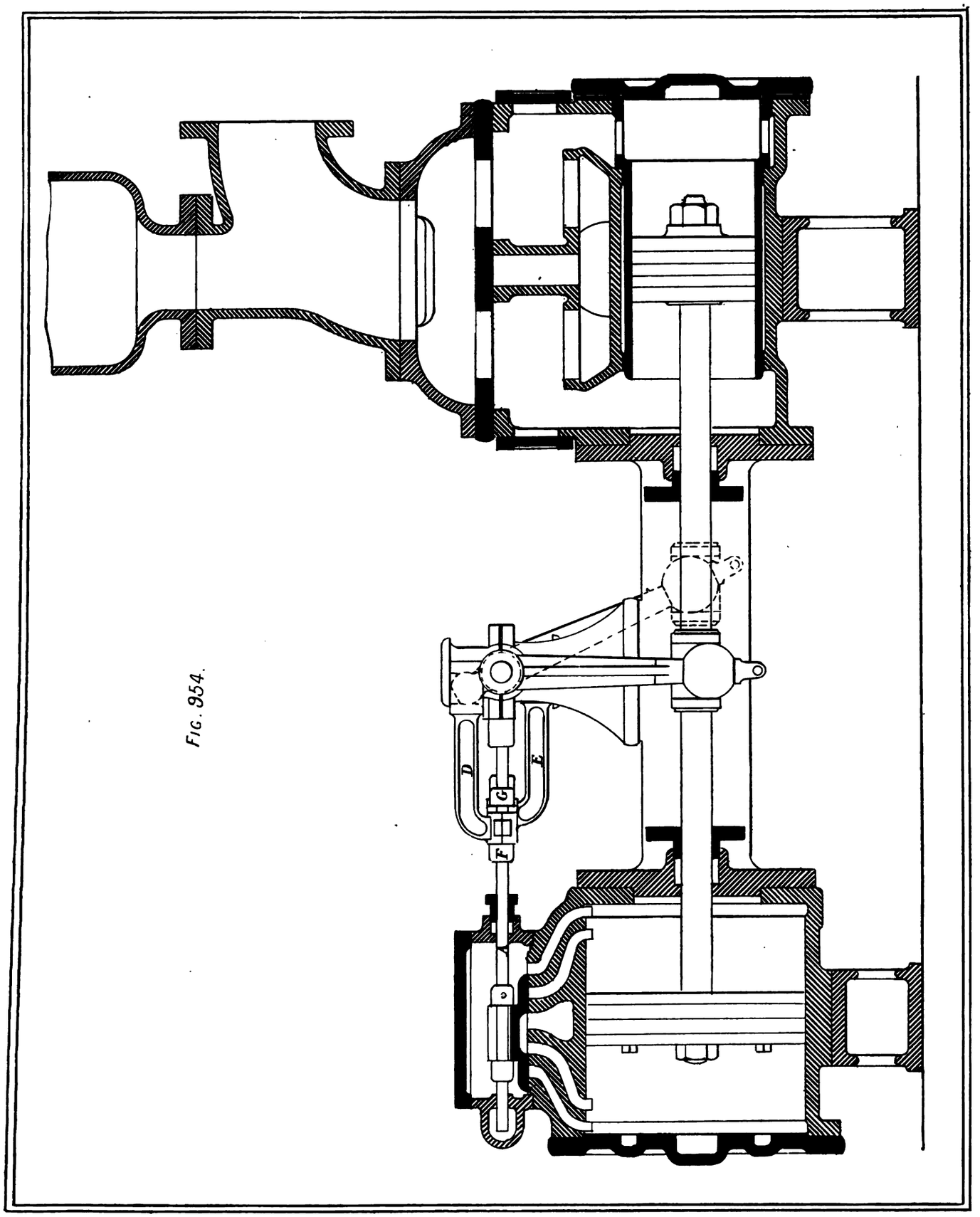

FIG. 954.

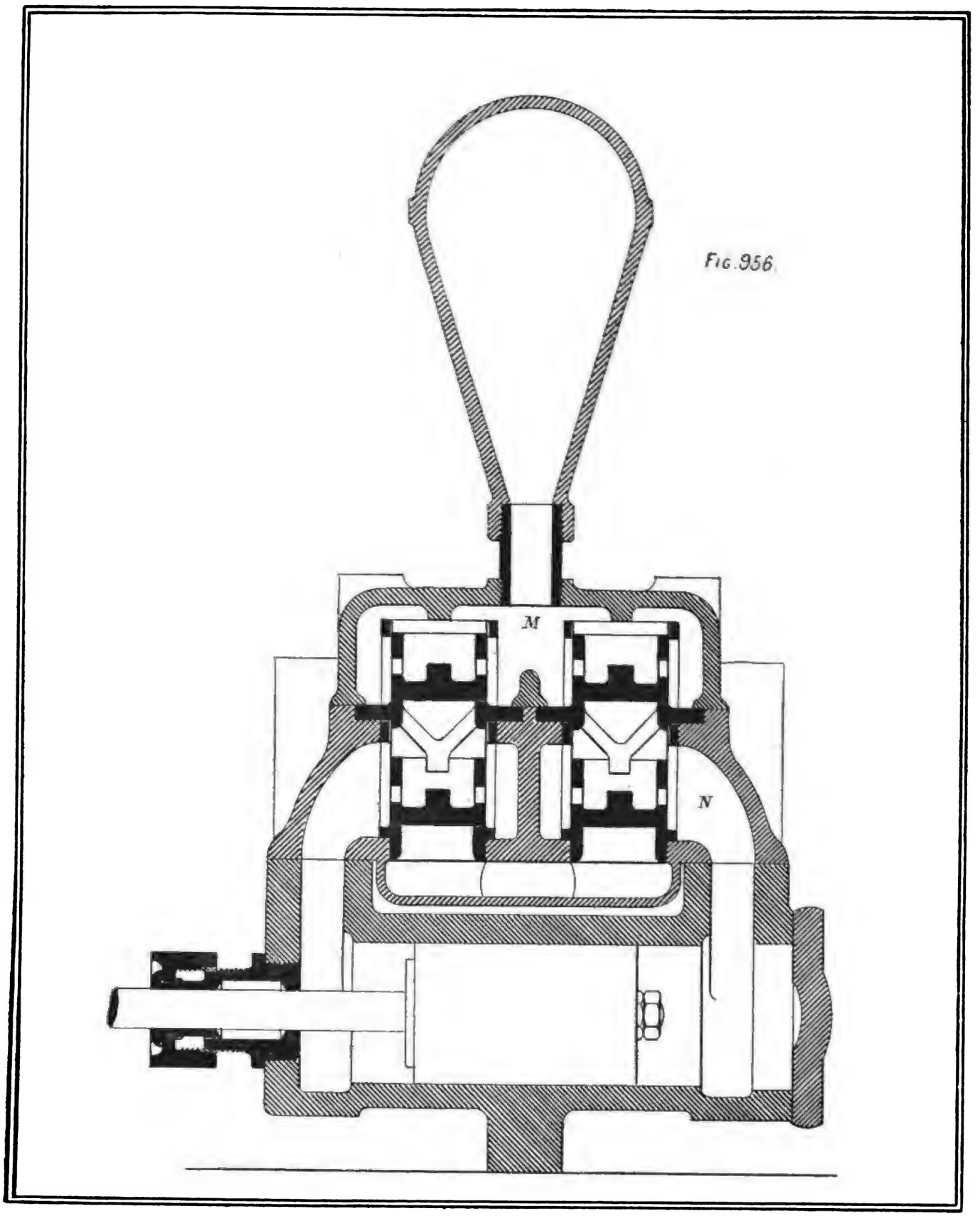

Fig. 956.

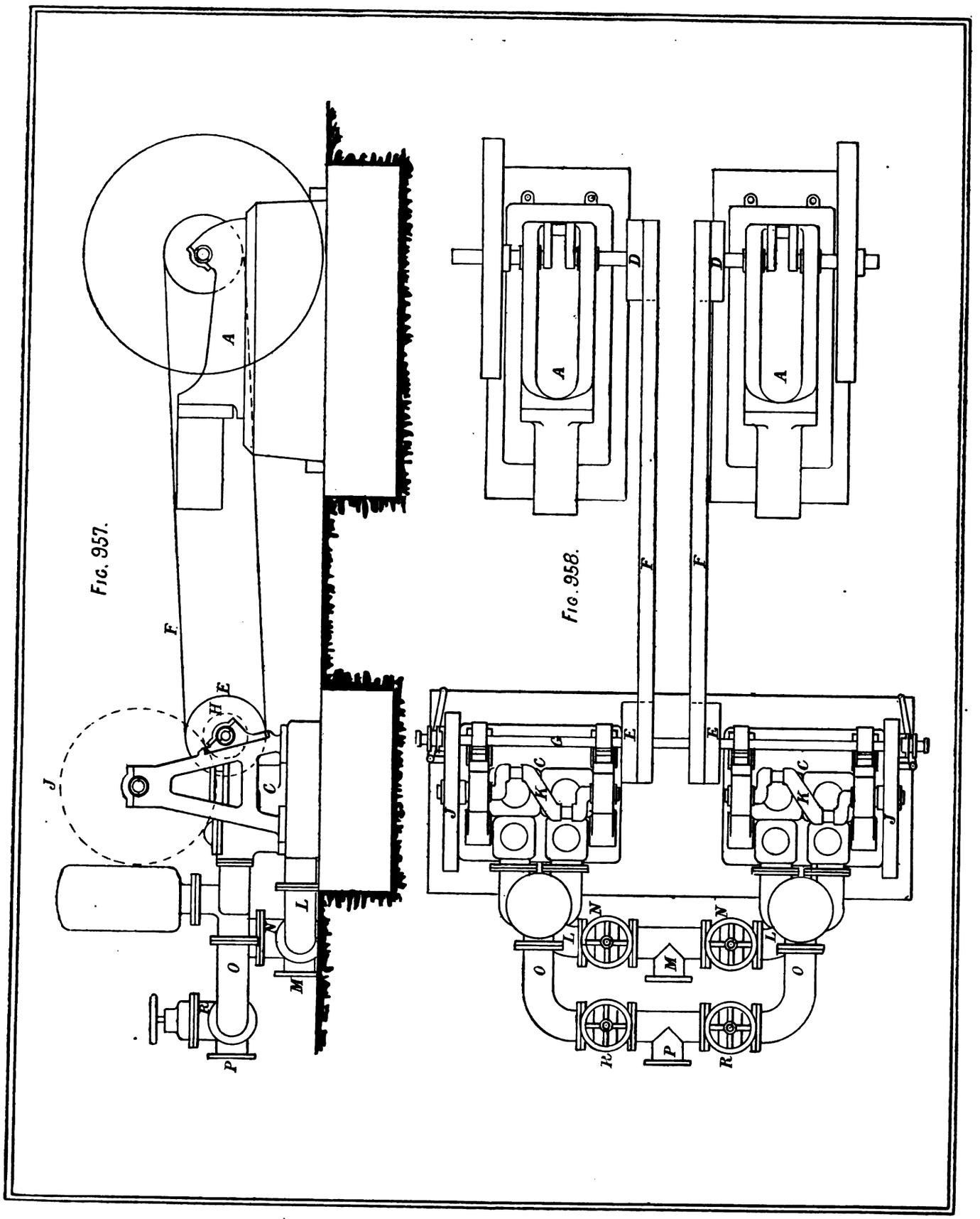

Fig. 957.

Fig. 958.

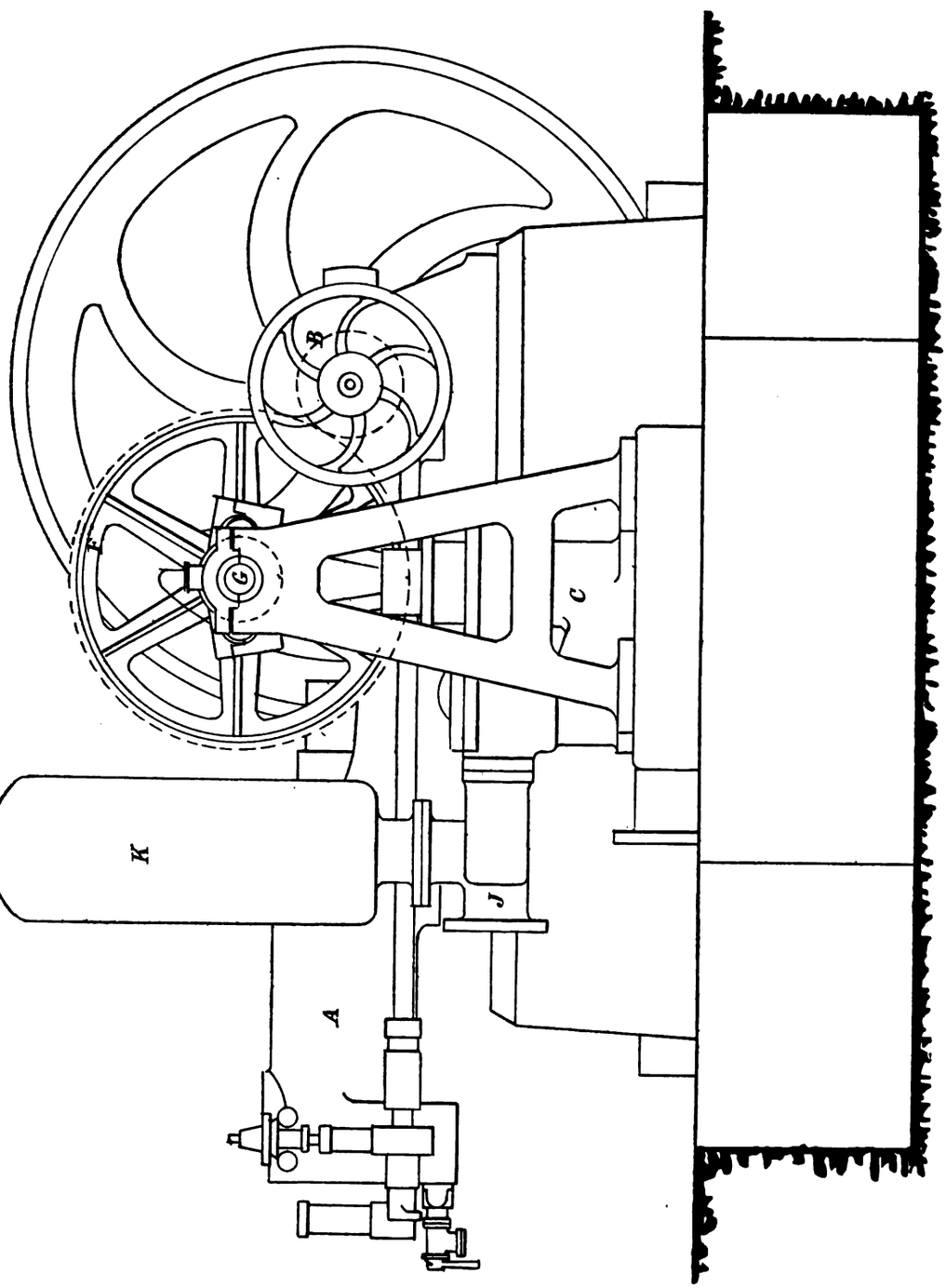

FIG. 959.

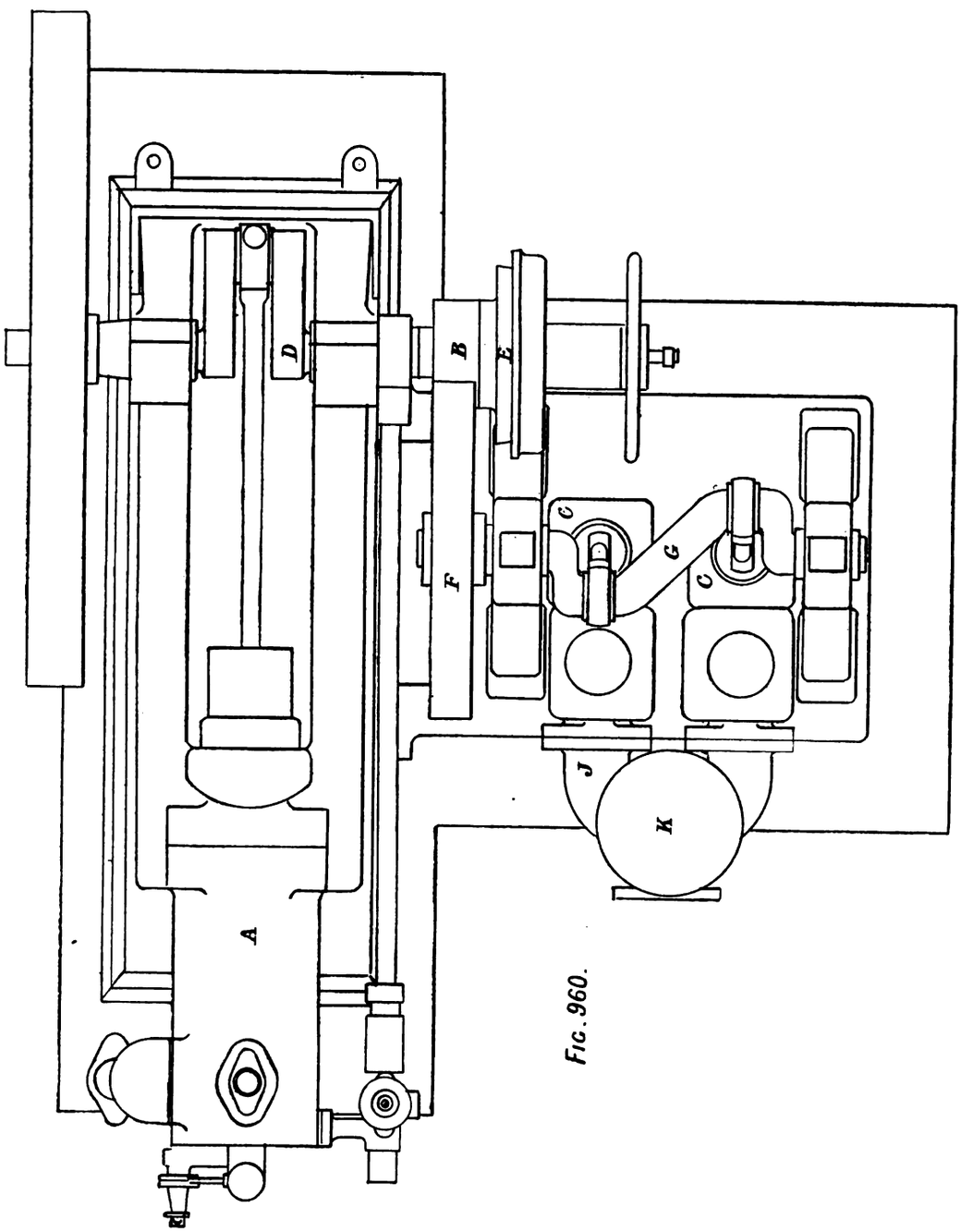

Fig. 960.

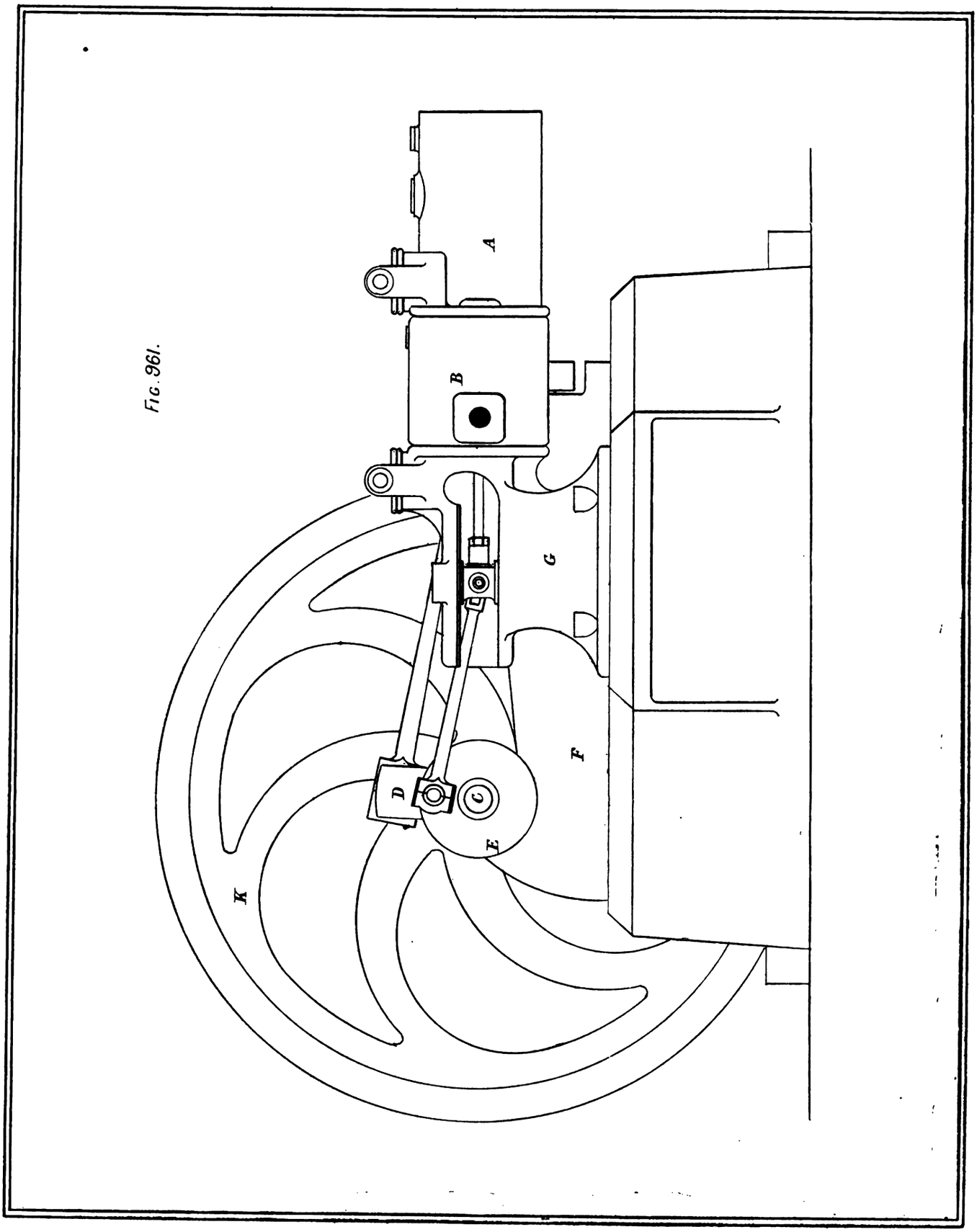

Fig. 961.

Fig.962.

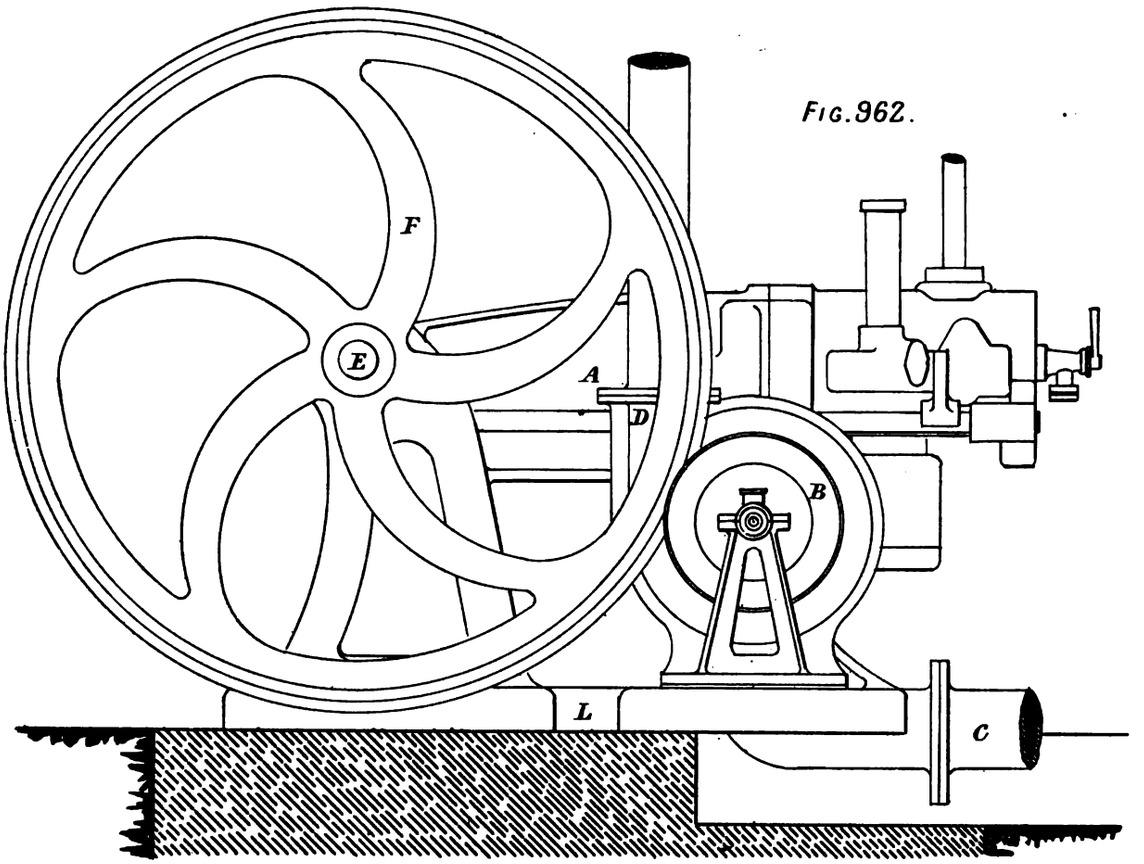

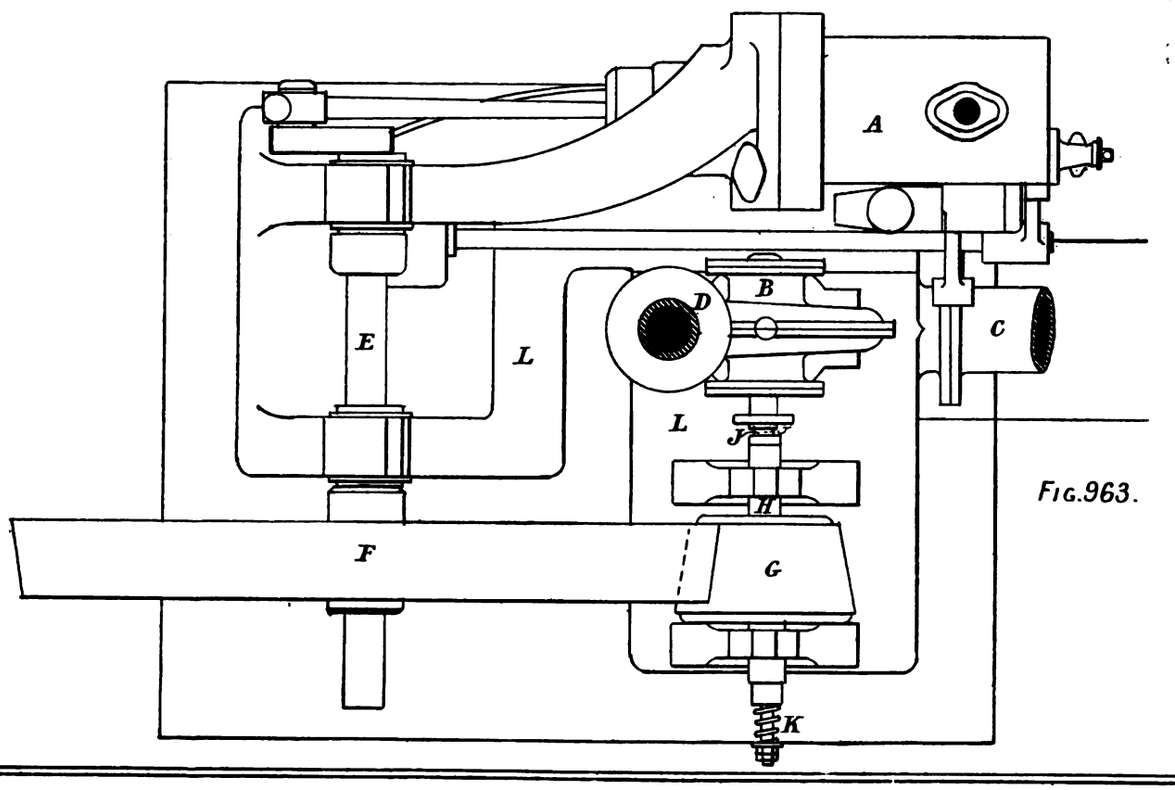

Fig.963.

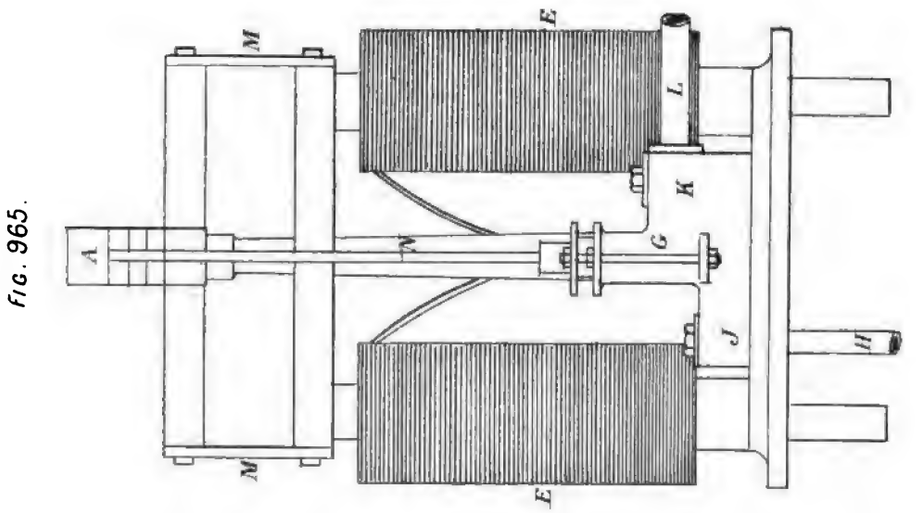

Fig. 965.

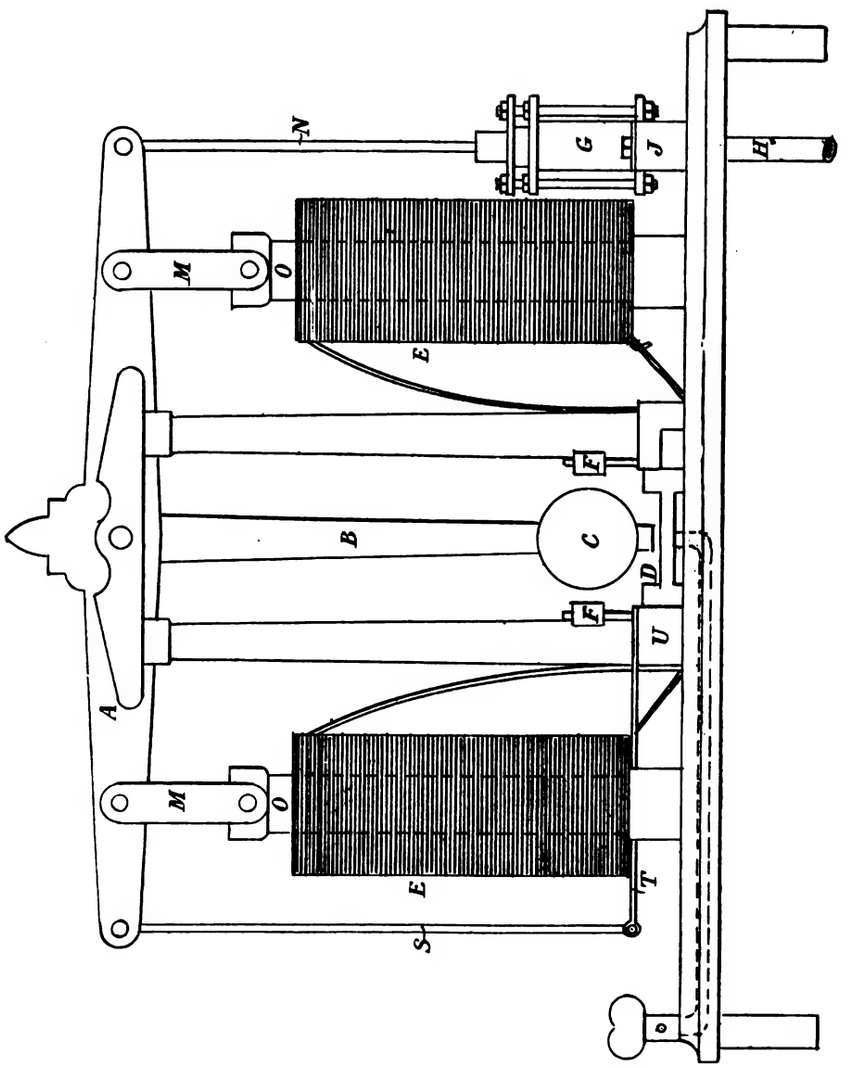

Fig. 964.

Fig 966.

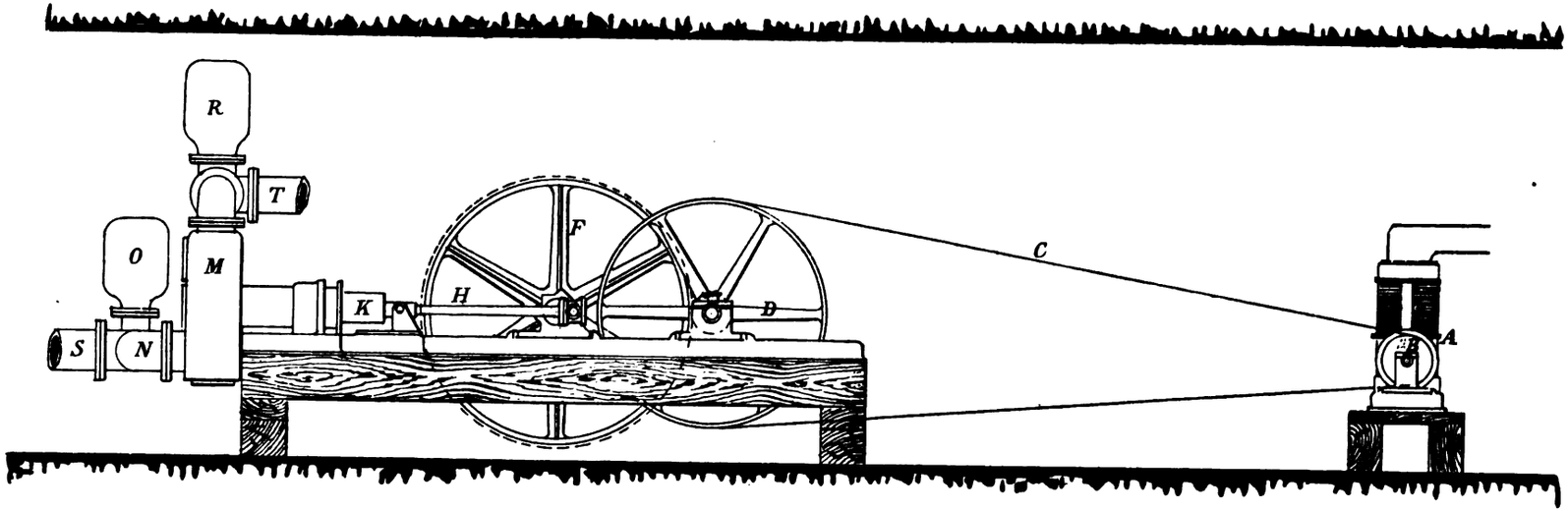

Fig. 967.

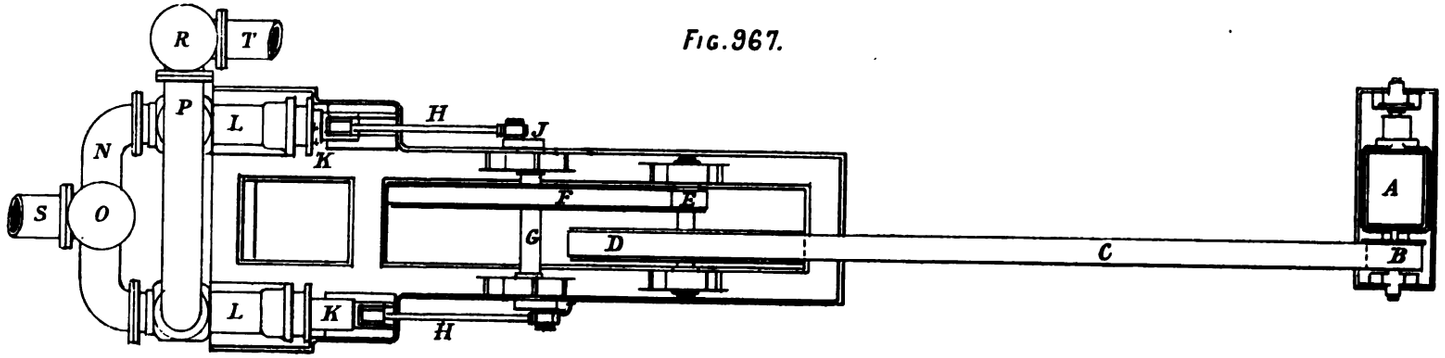

Plate CCXLII.

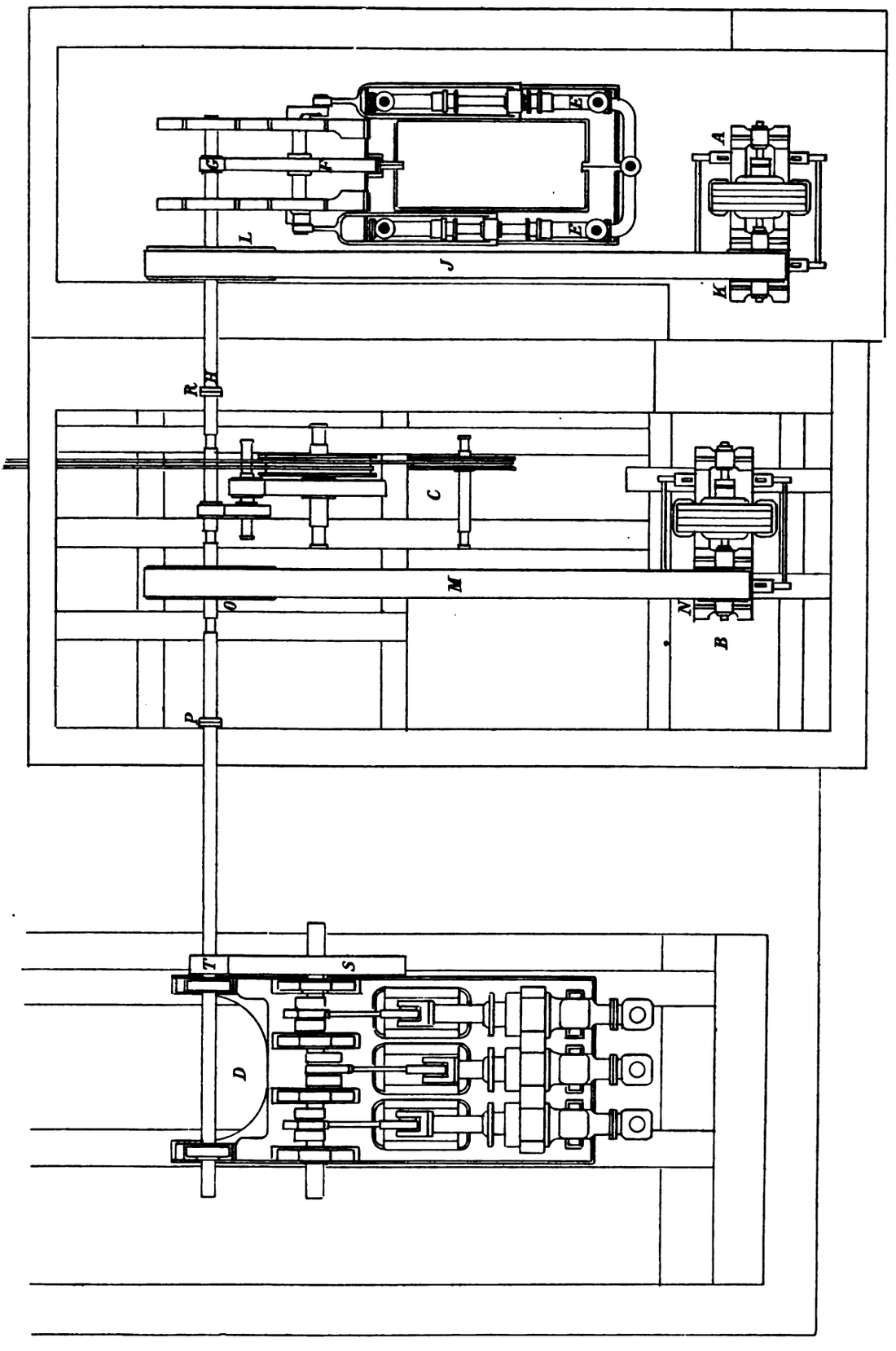

Fig 968.

Fig 970

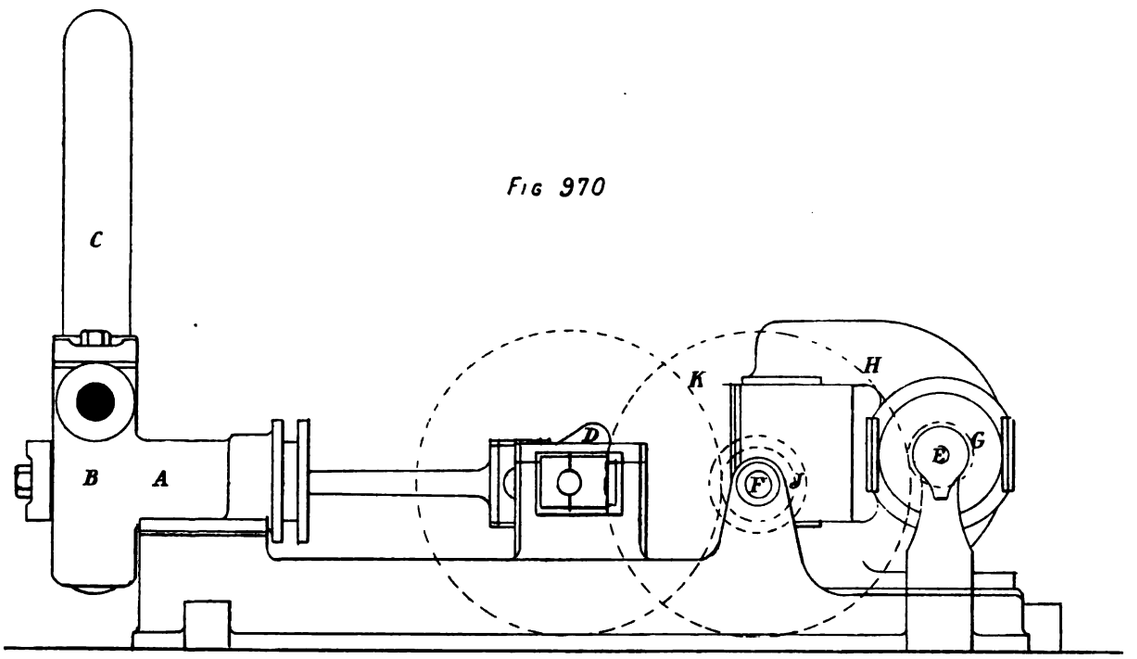

Fig. 969.

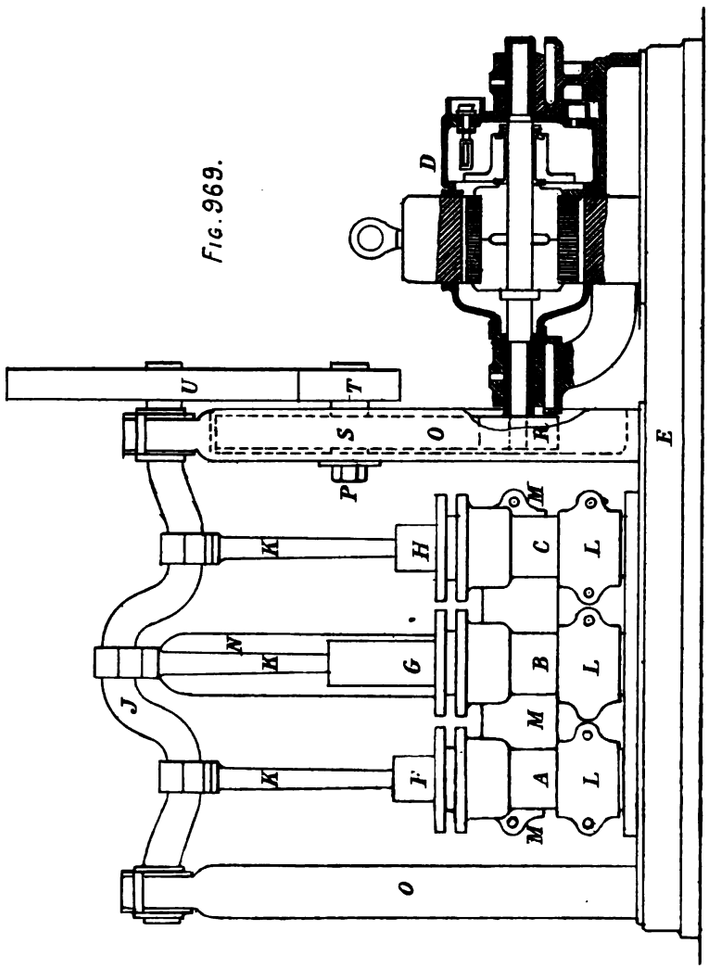

Fig. 971.

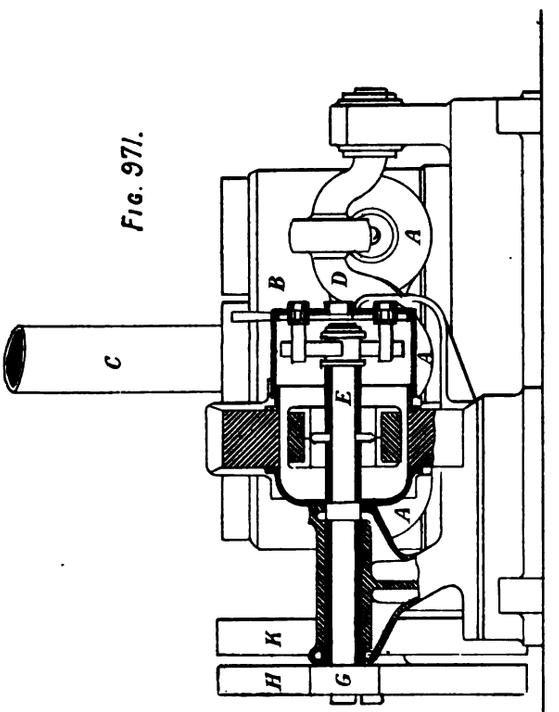

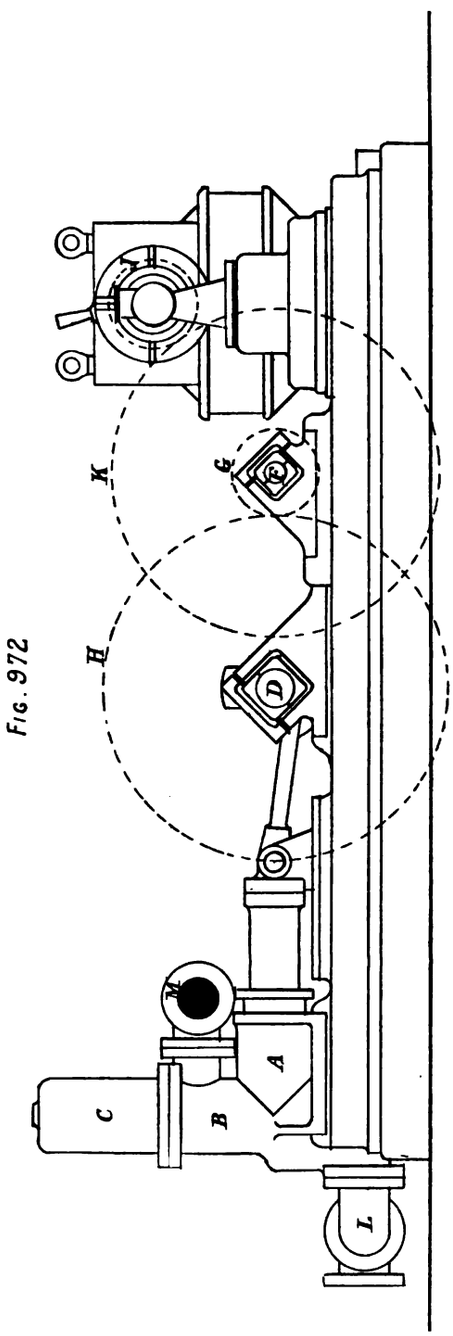

FIG. 972.

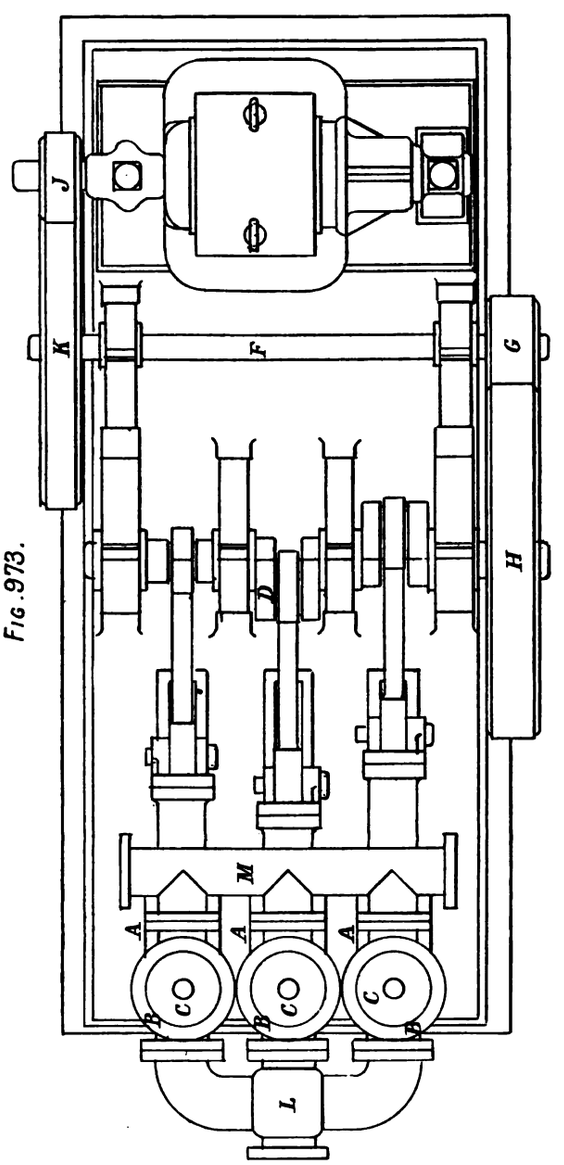

FIG. 973.

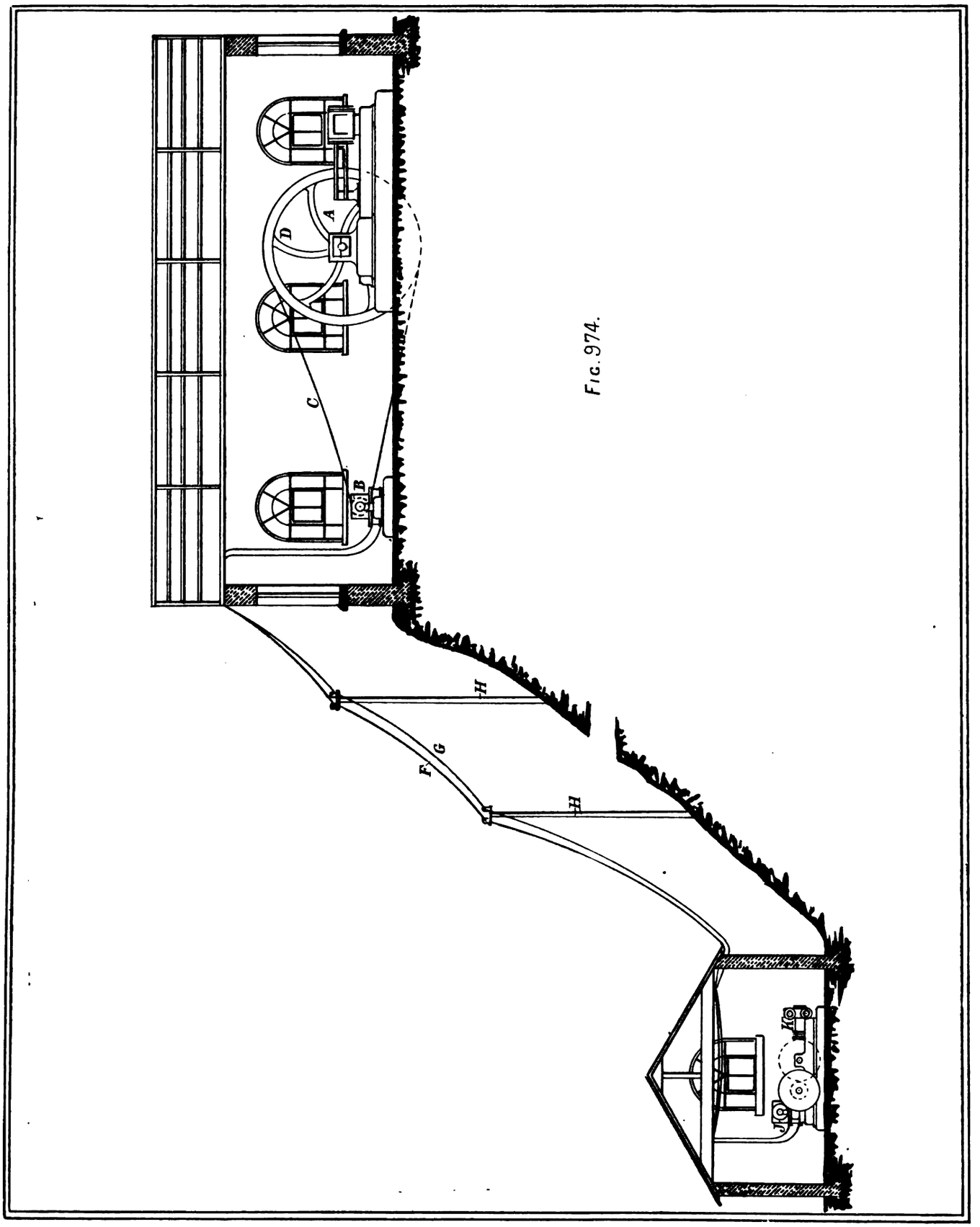

FIG. 974.

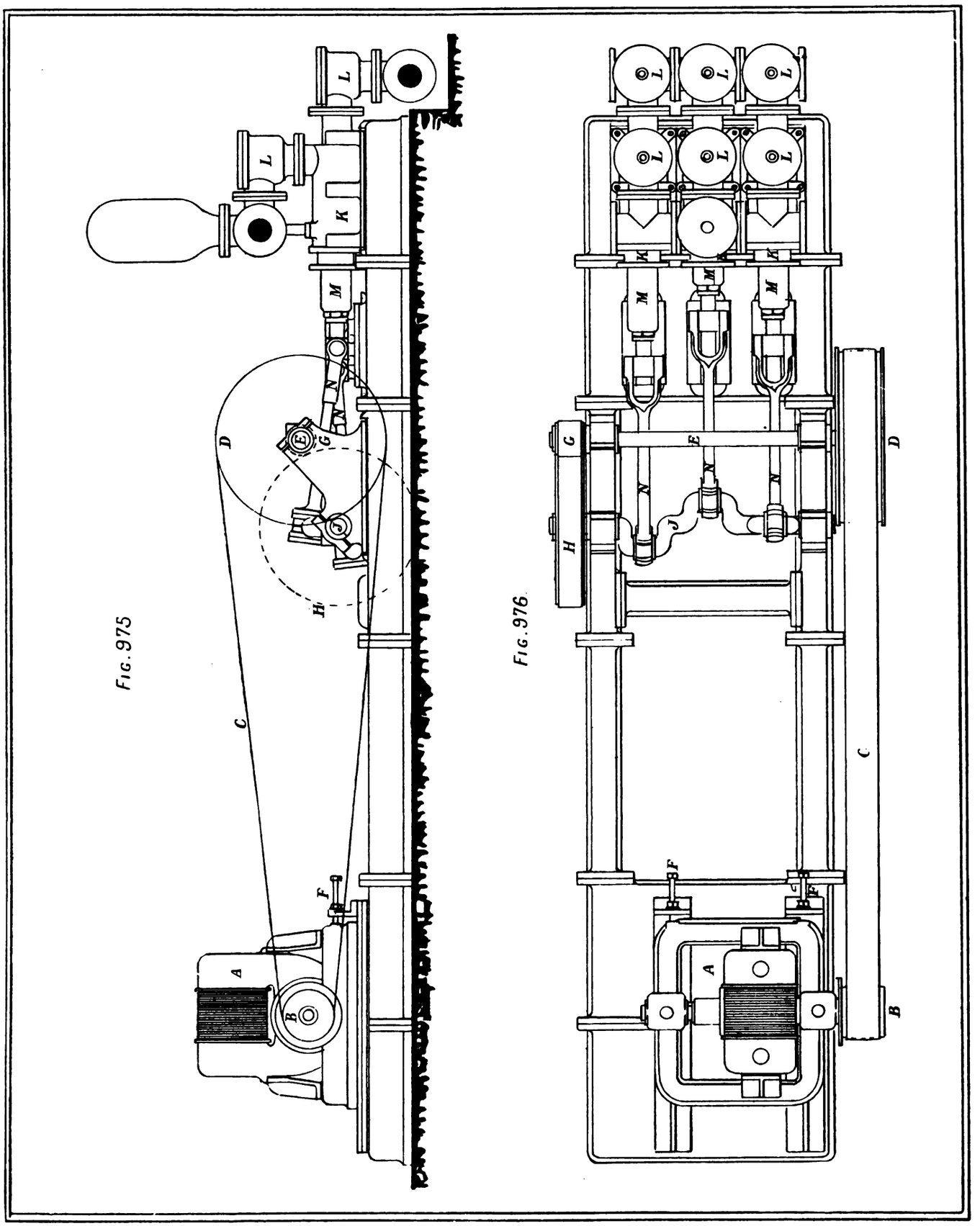

FIG. 975.

FIG. 976.

Fig. 977.

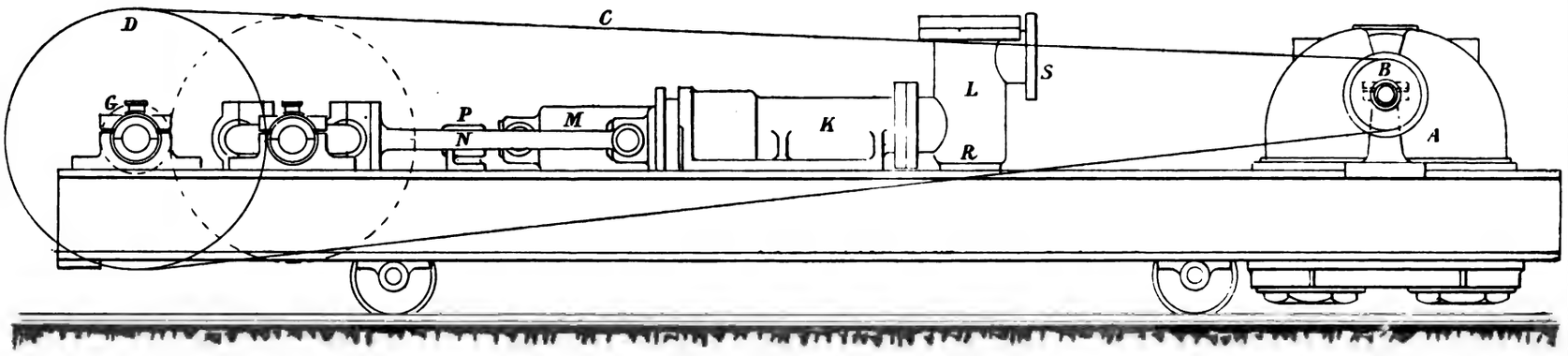

Fig 978.

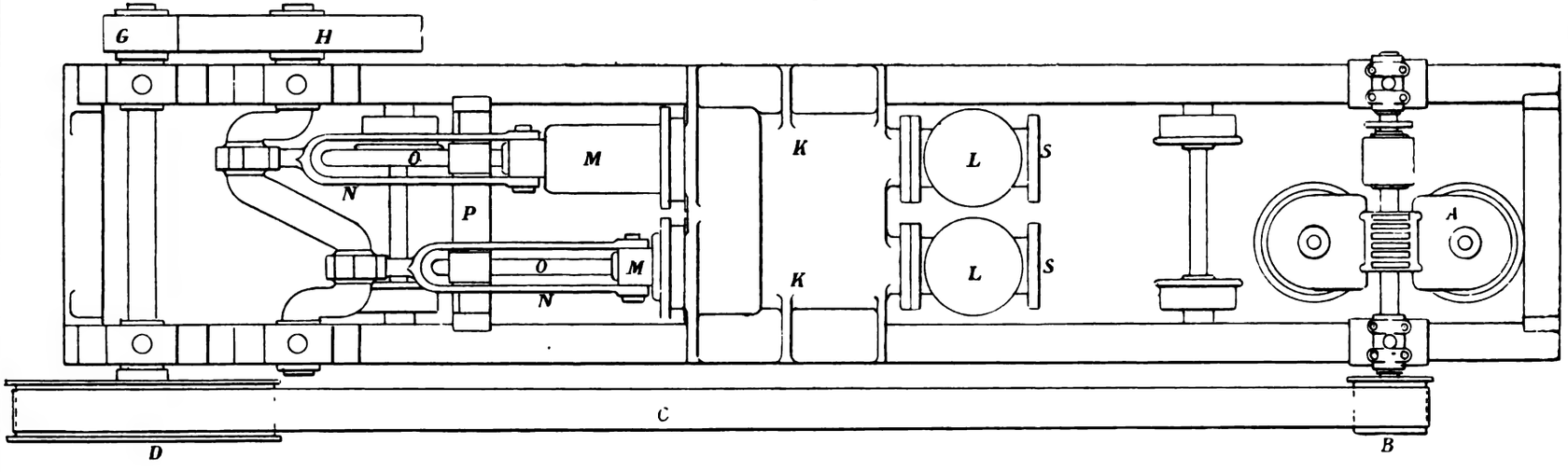

Plate CCXLVIII

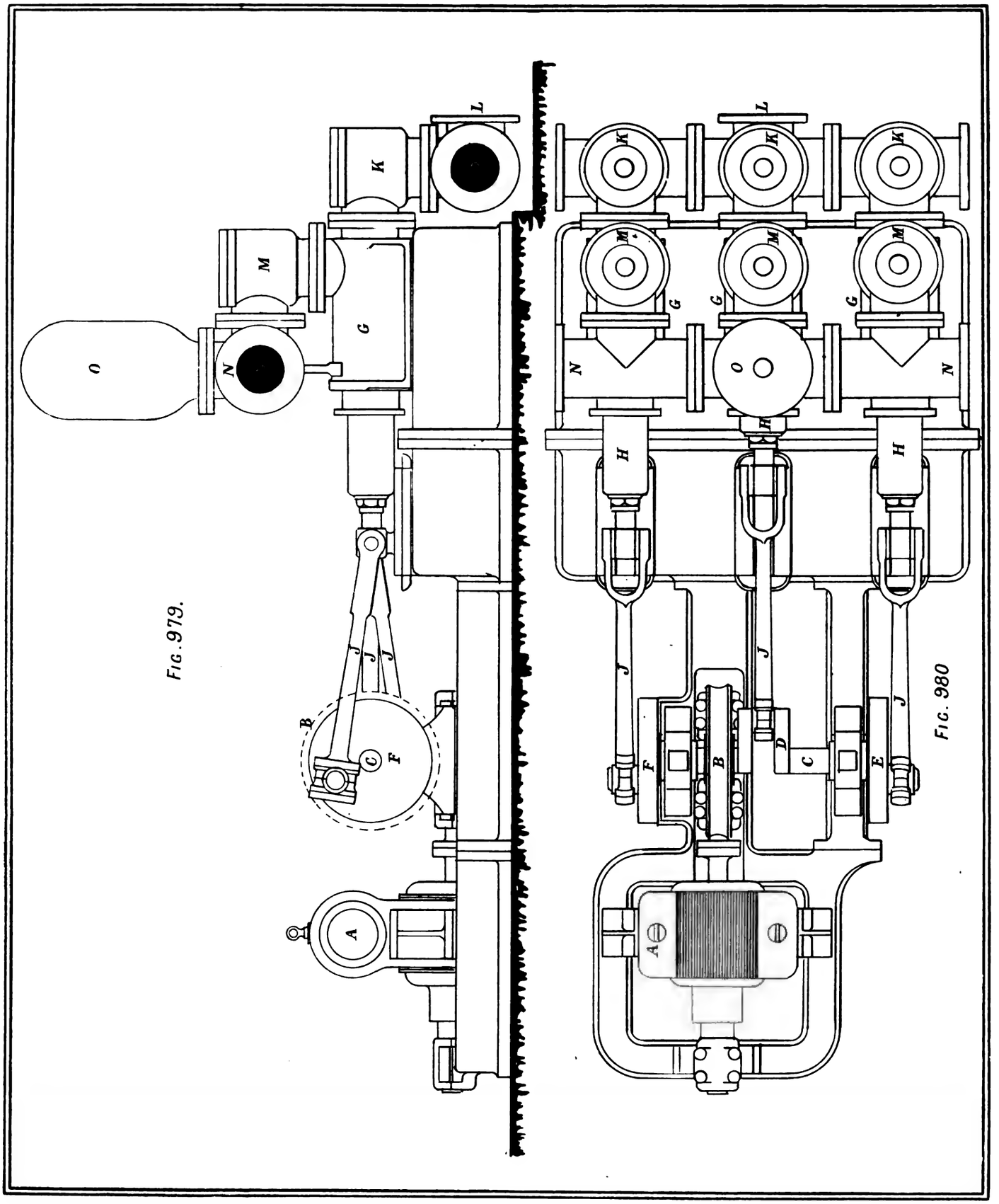

FIG. 979.

FIG. 980

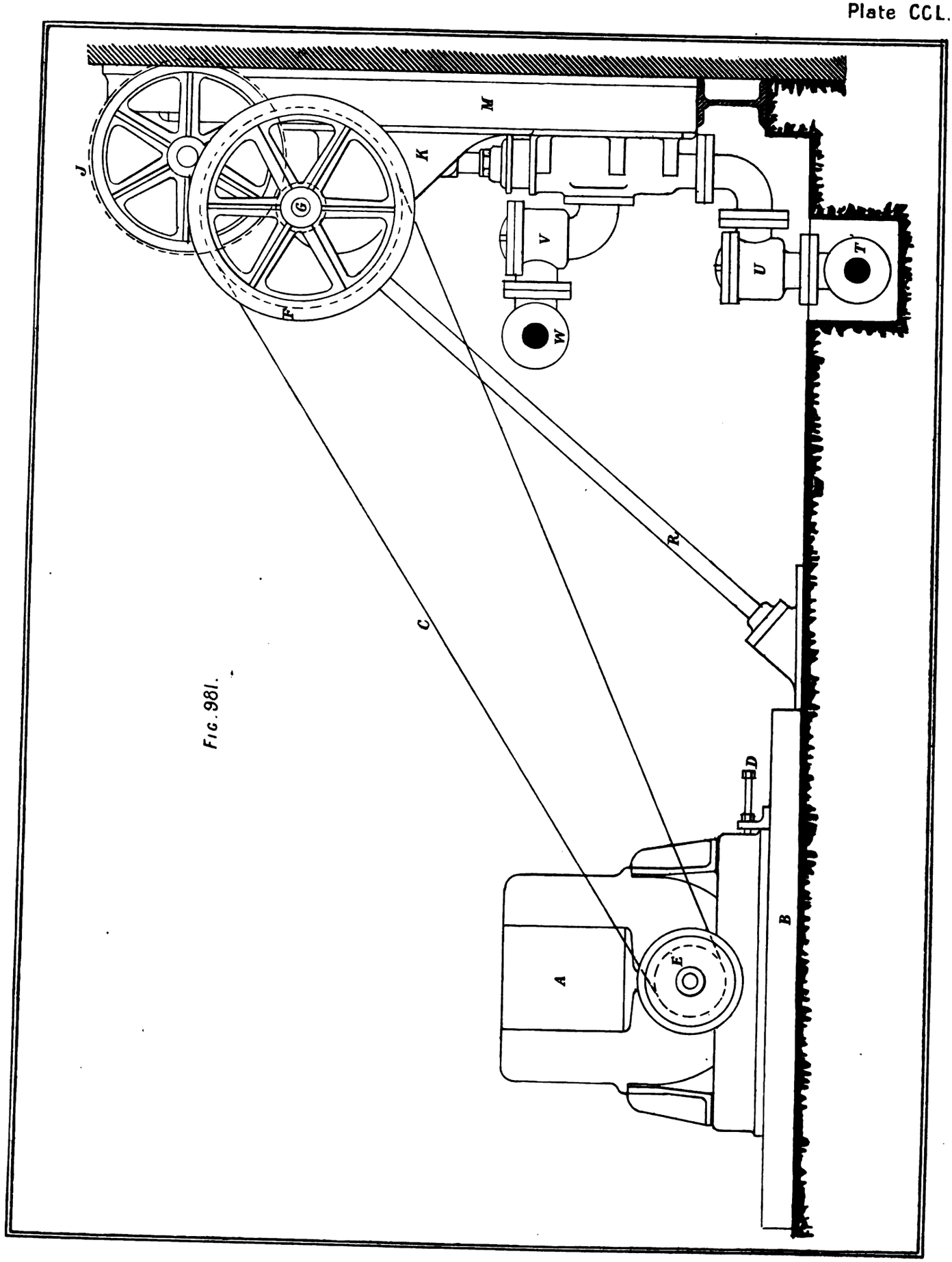

Fig. 981.

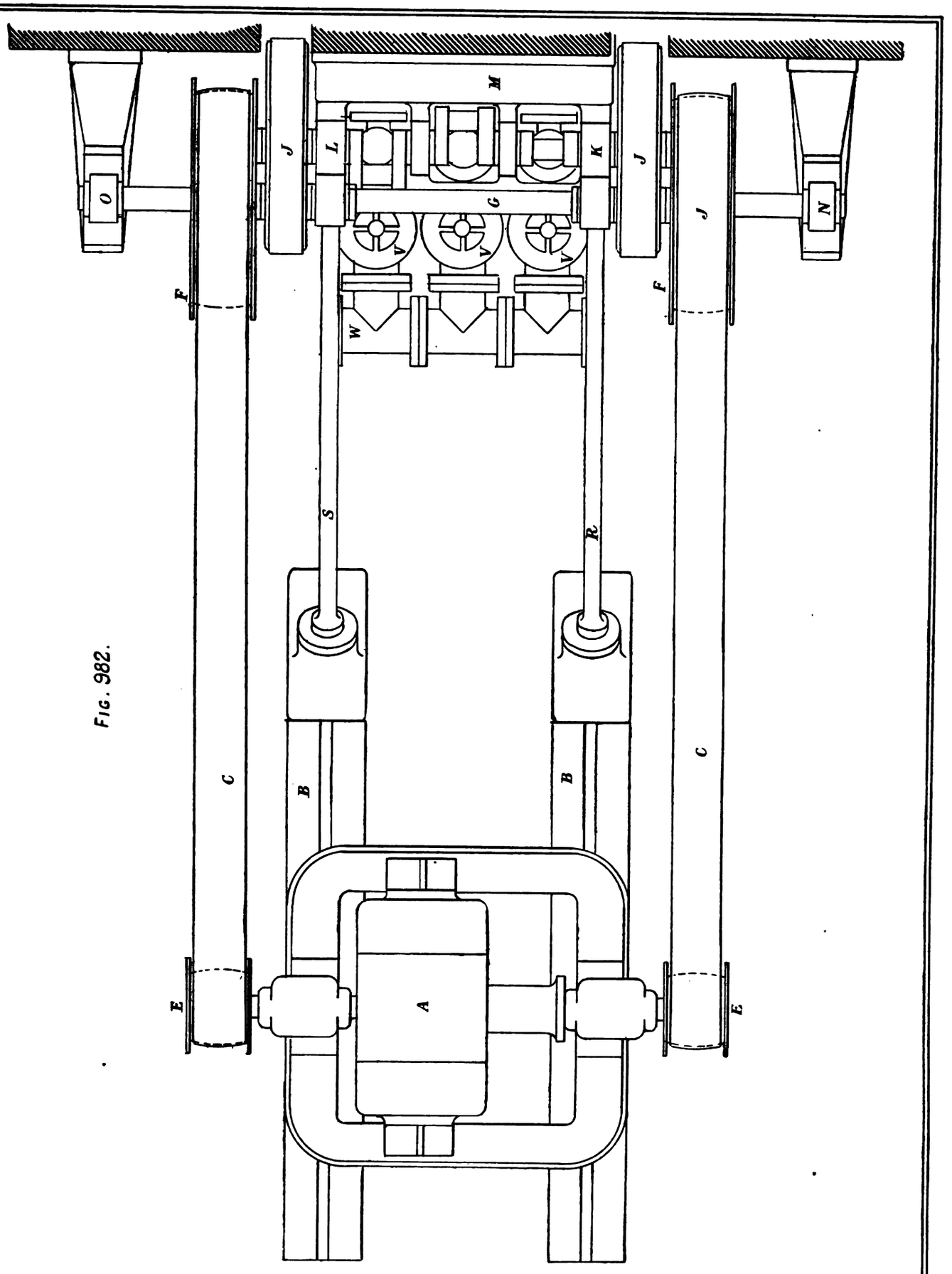

FIG. 982.

Fig. 983.

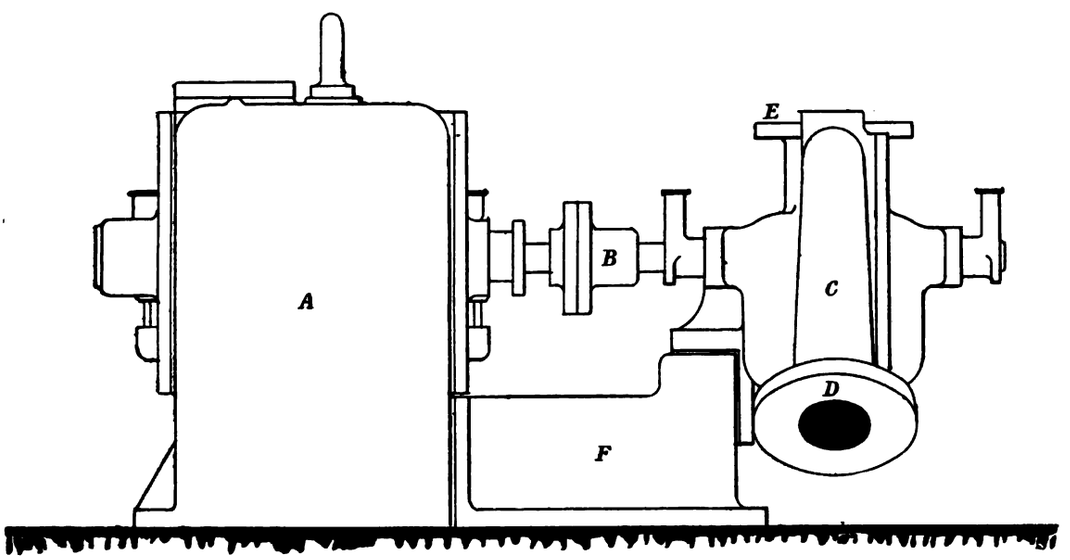

Fig 984

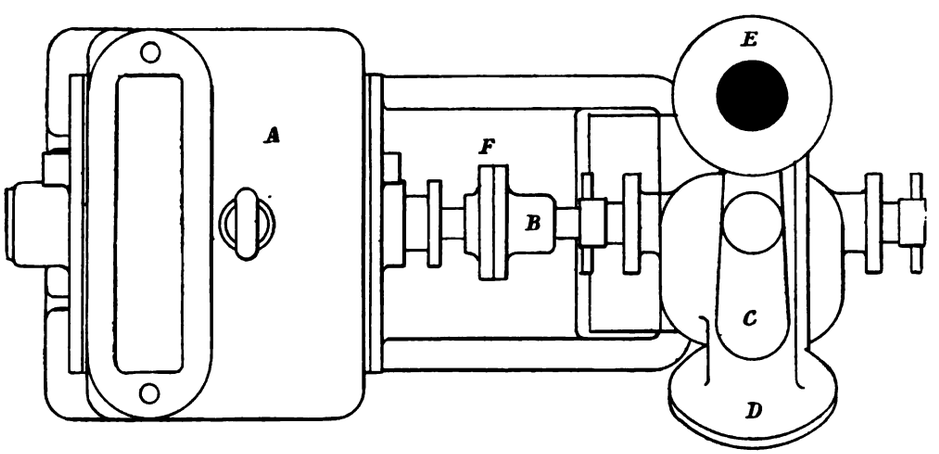

Fig. 985.

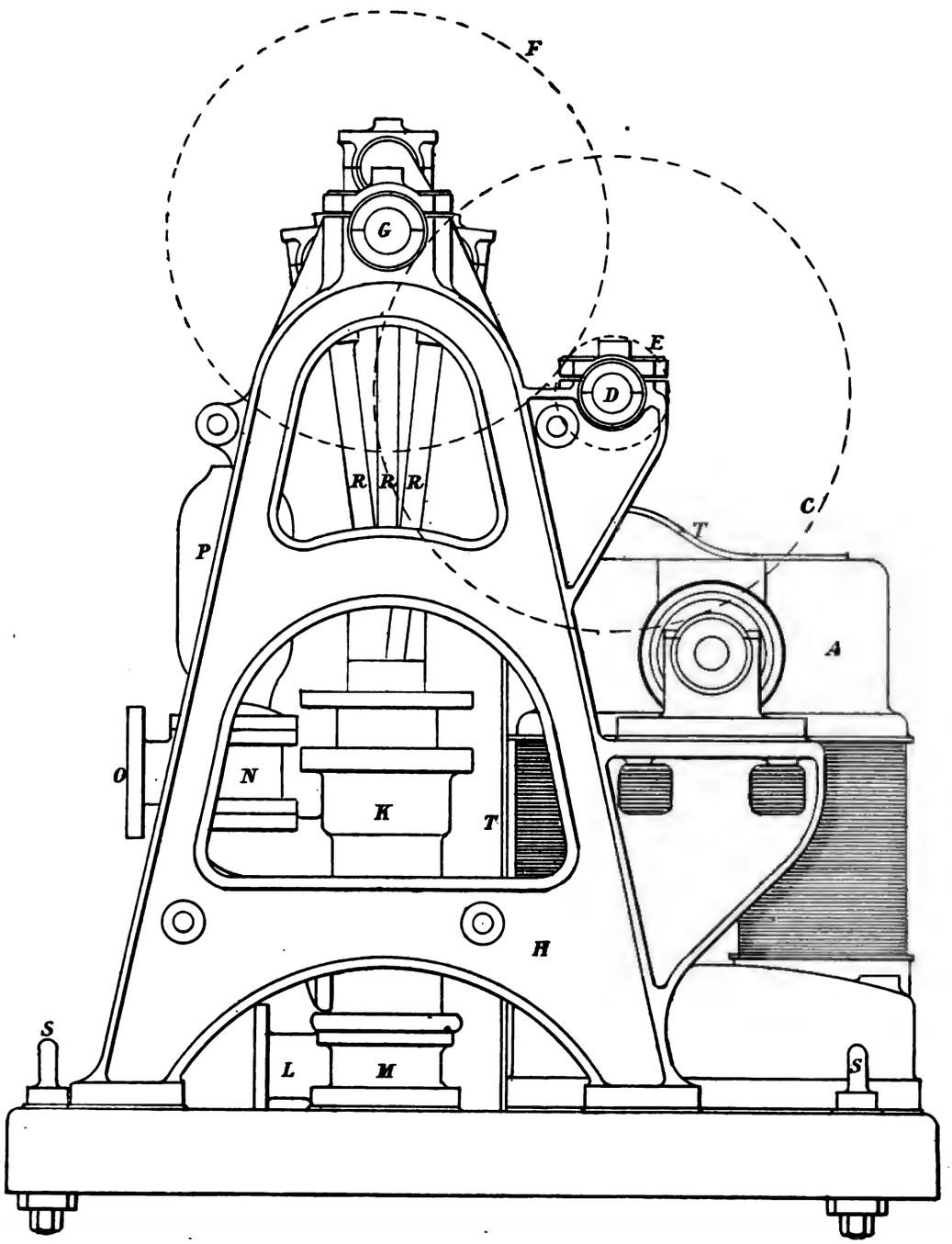

Fig. 986.

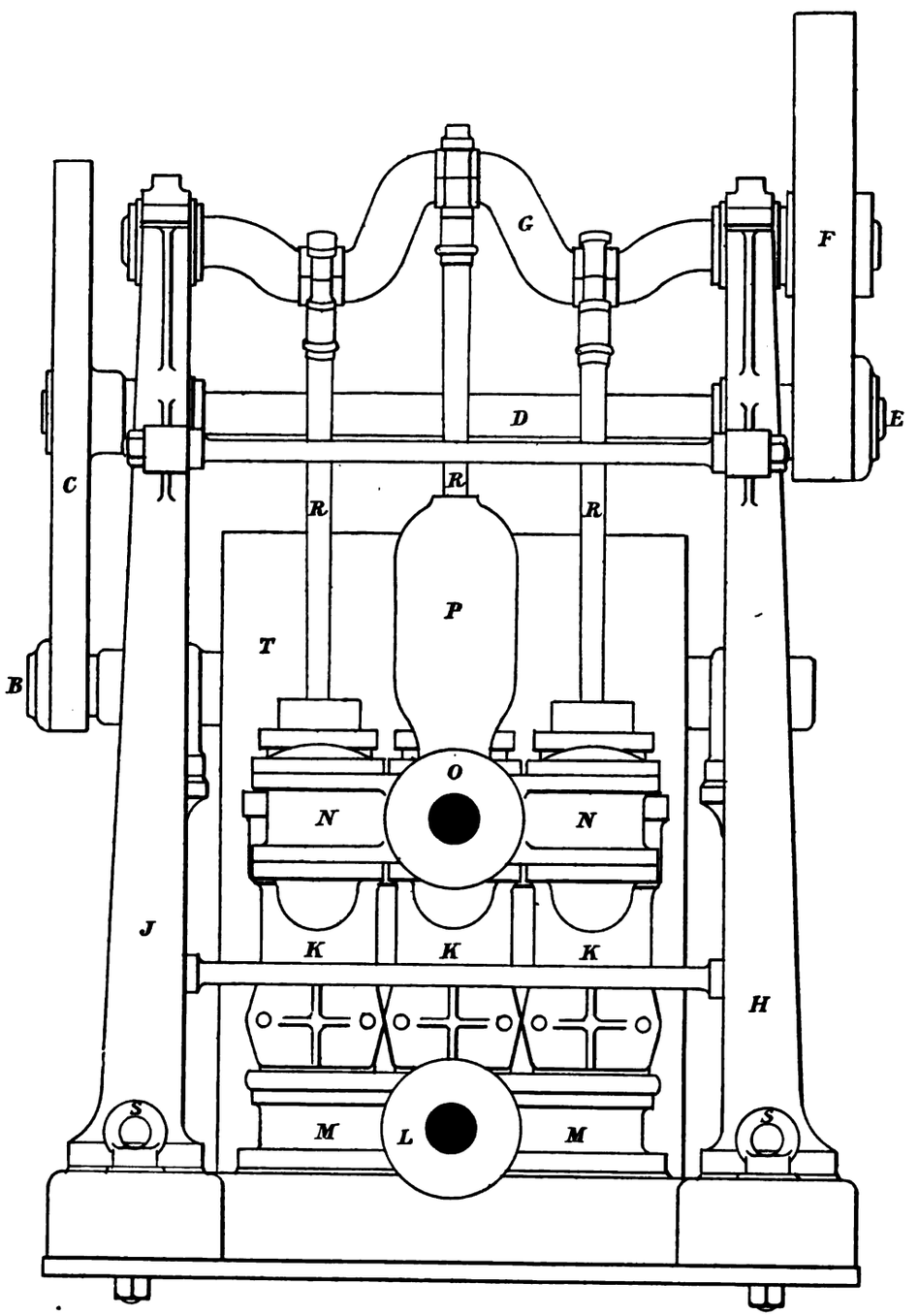

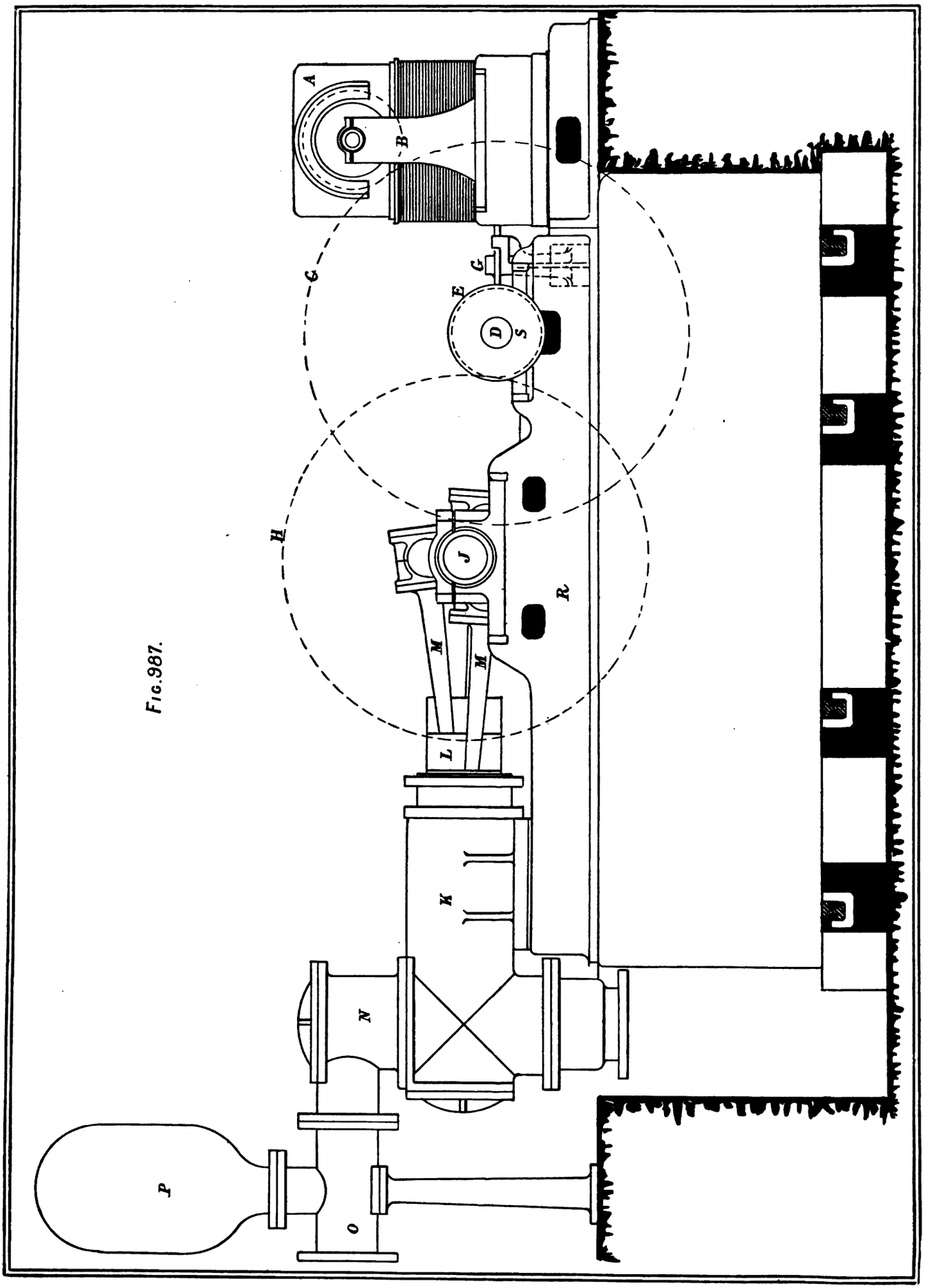

Fig. 987.

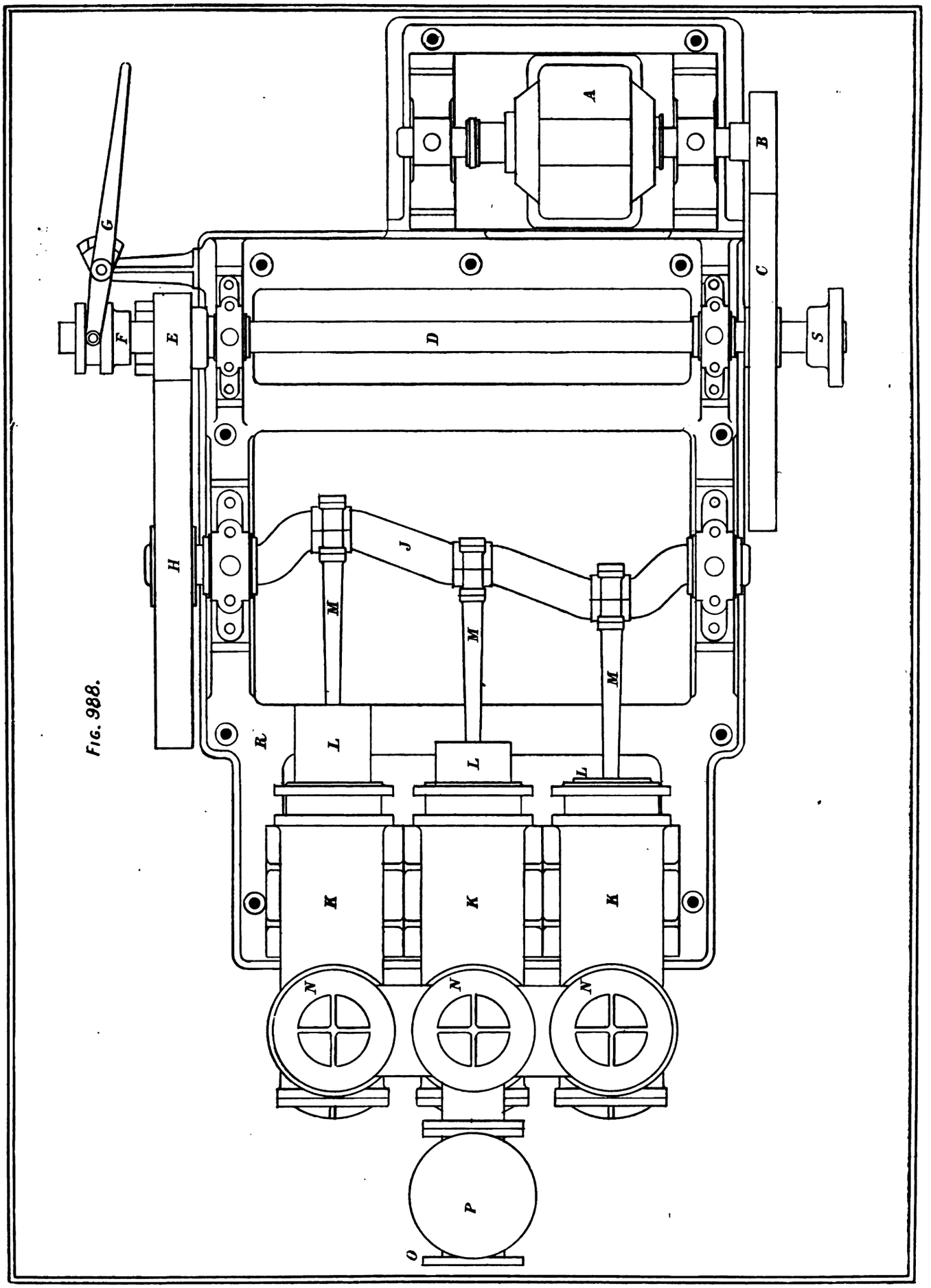

Fig. 988.

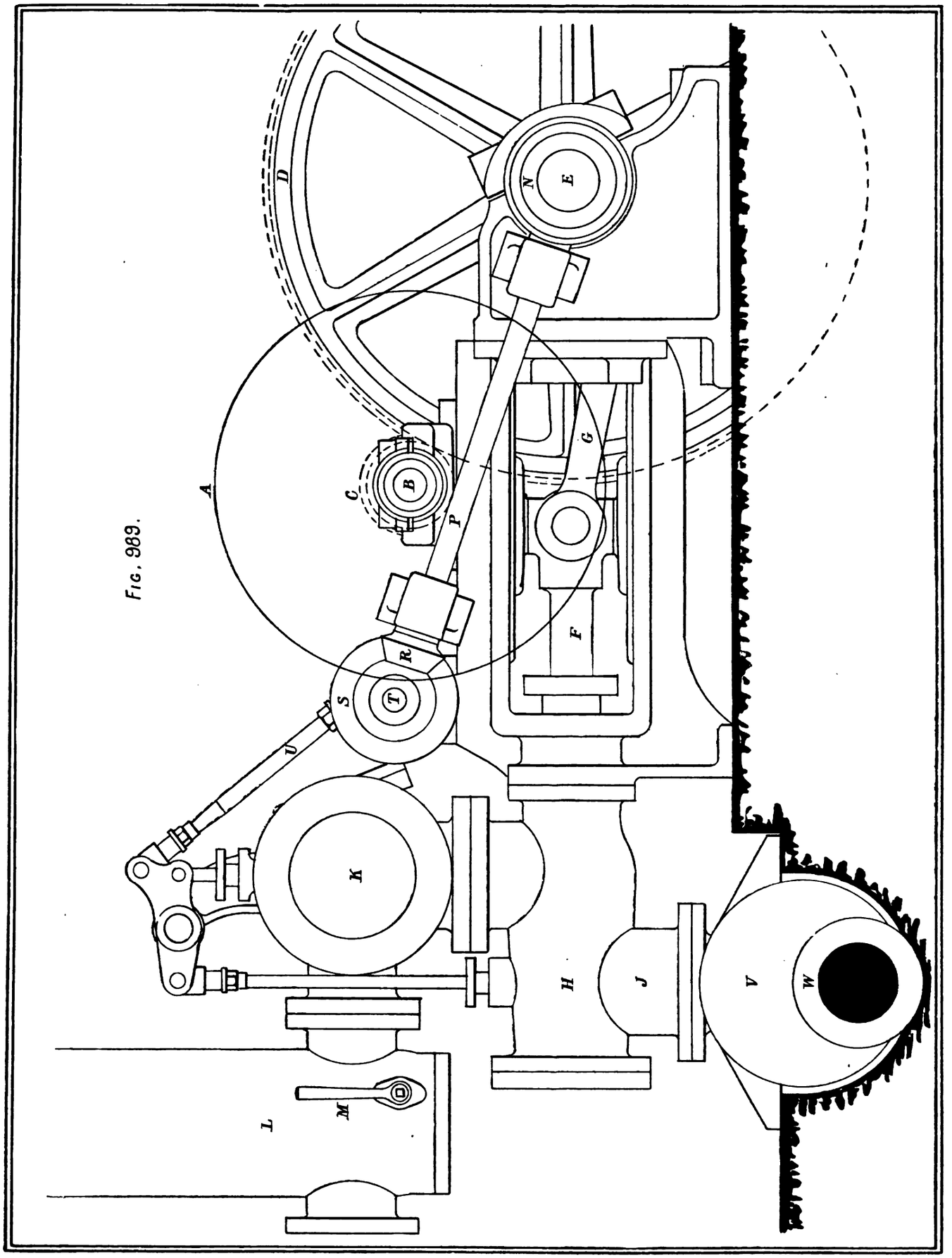

FIG. 989.

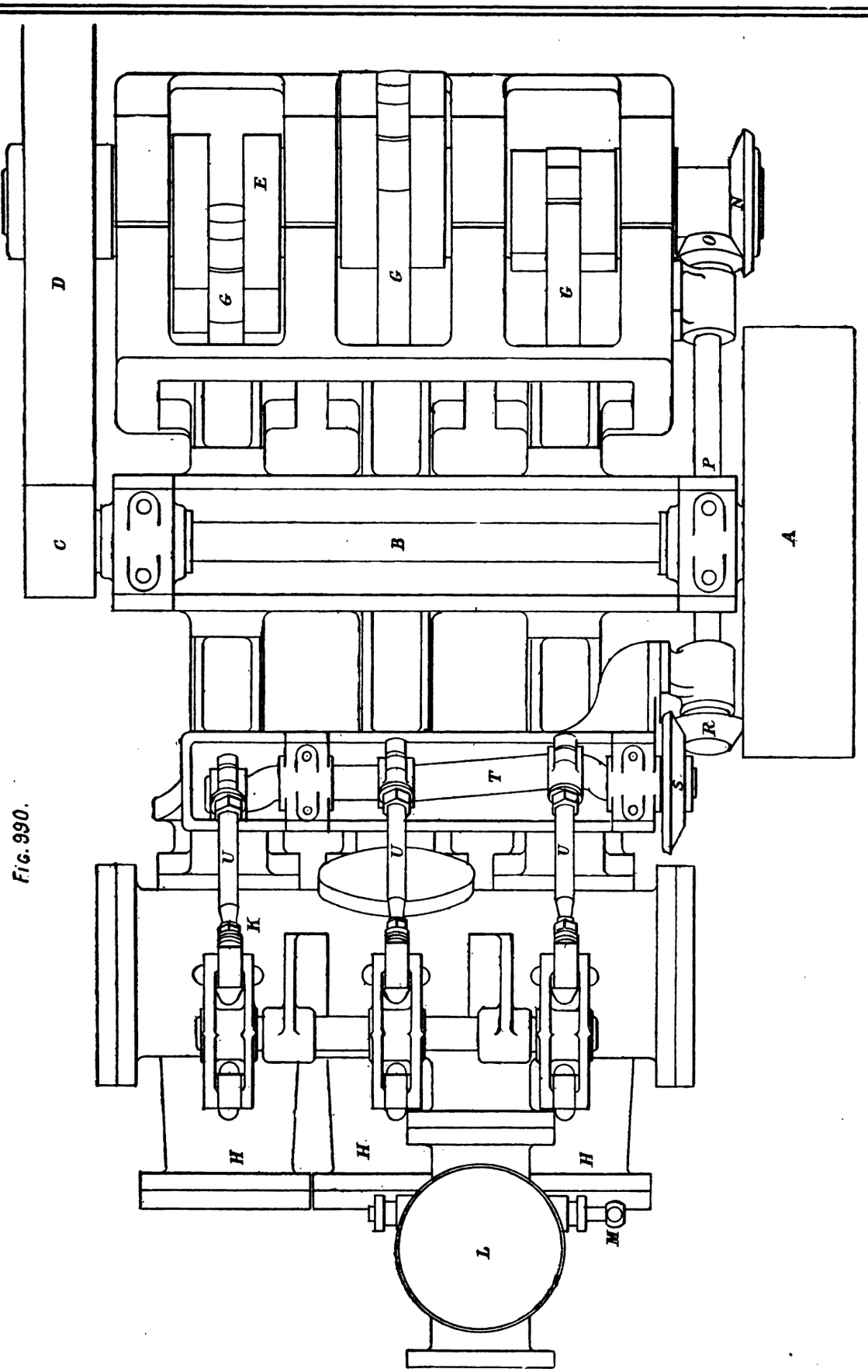

Fig. 990.

Fig.991.

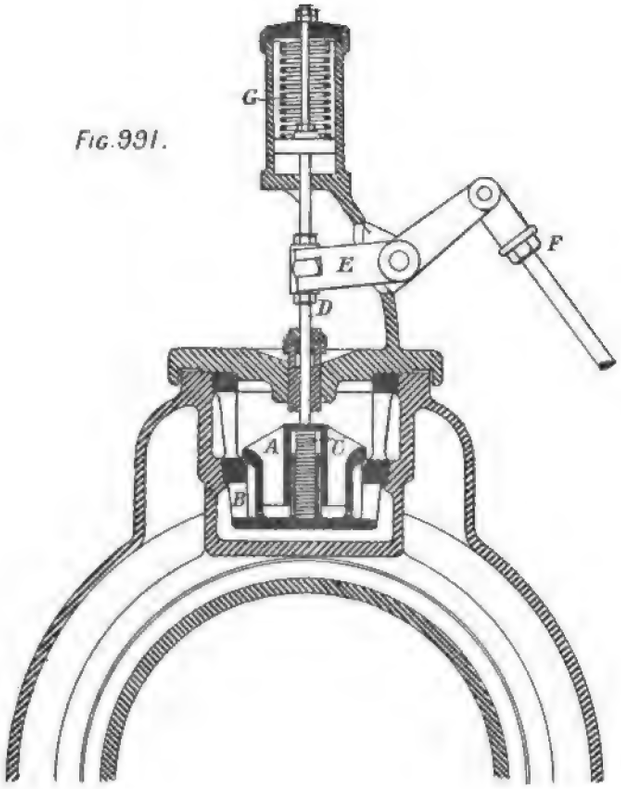

Fig.993.

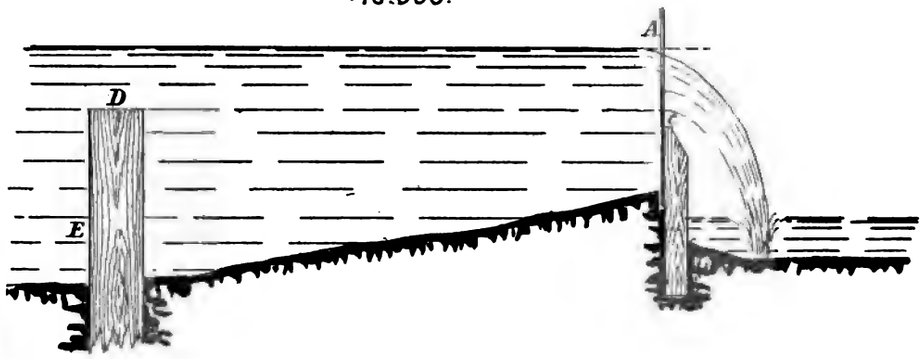

Fig.994.

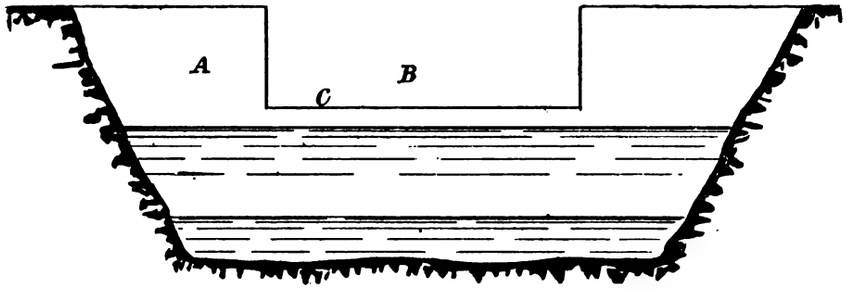

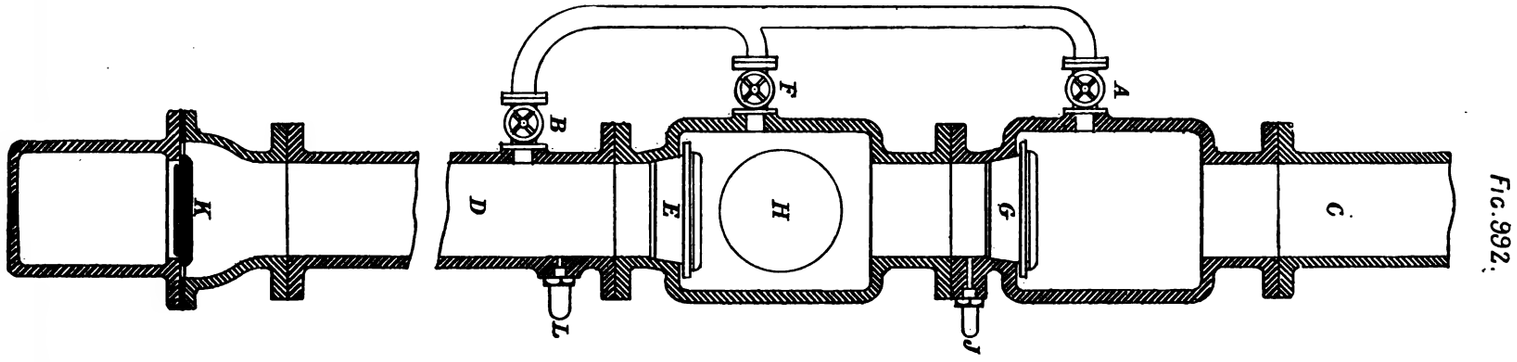

Fig.992.

Plate CCLIX

Fig.997.

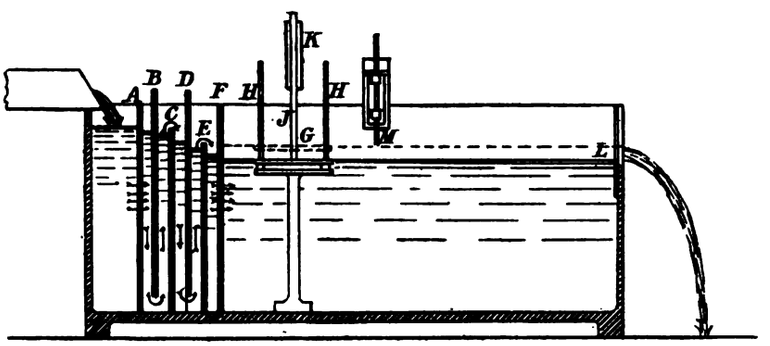

Fig.998.

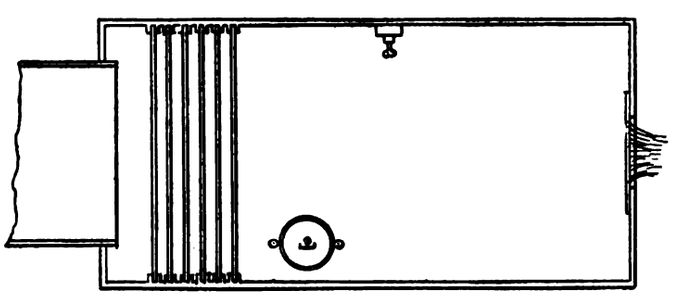

Fig.999.

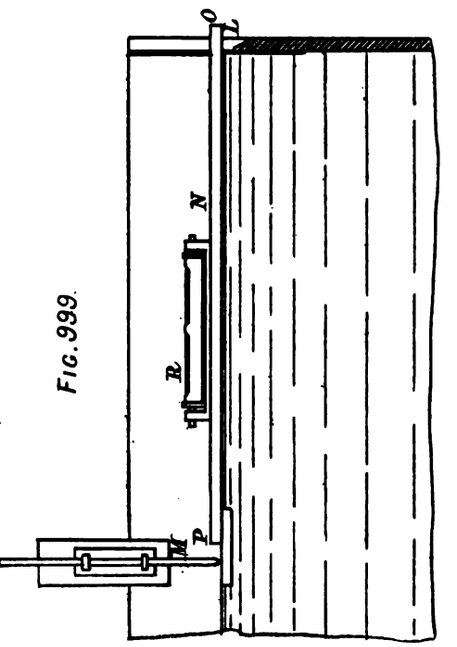

Fig.1001.

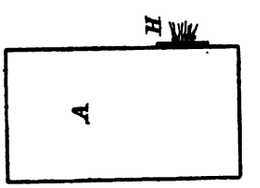

Fig.995.

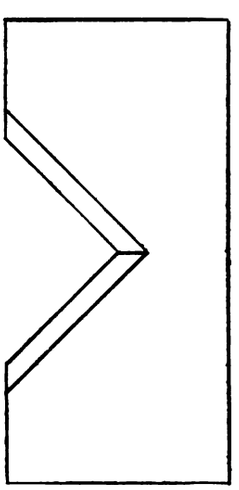

Fig.996.

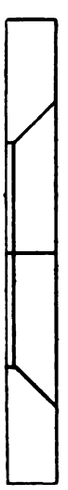

Fig.1000.

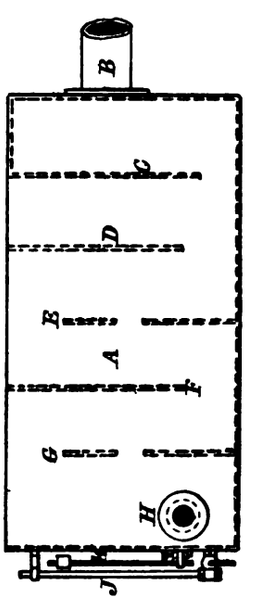

FIG. 1004.

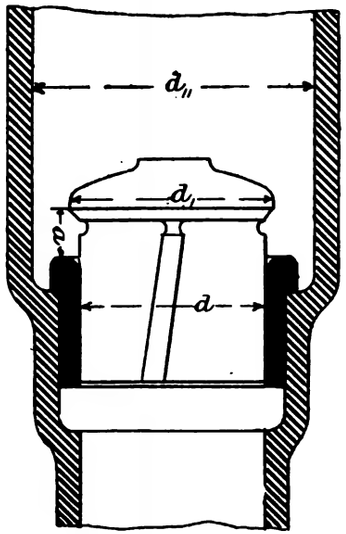

FIG. 1005.

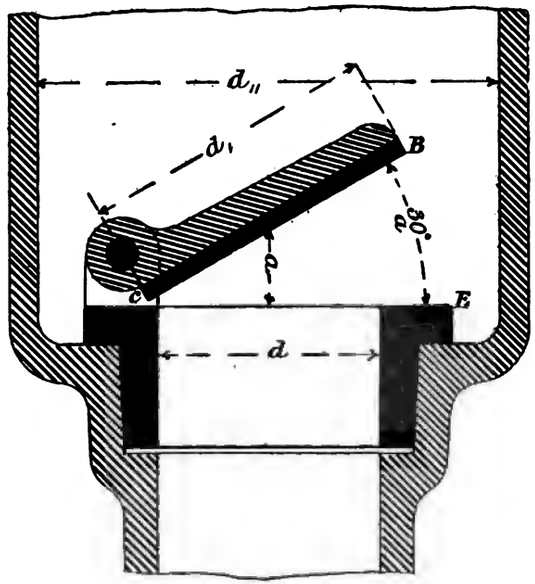

FIG. 1006.

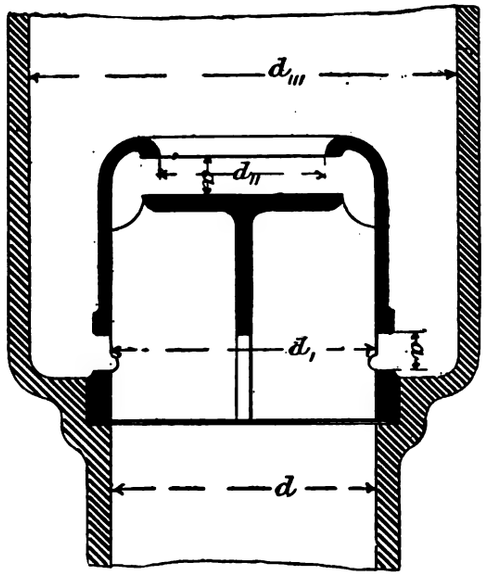

FIG. 1002.

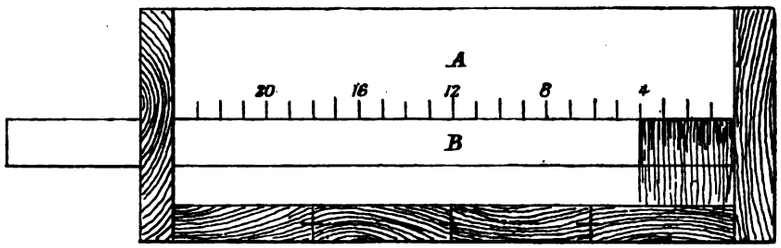

FIG. 1003.

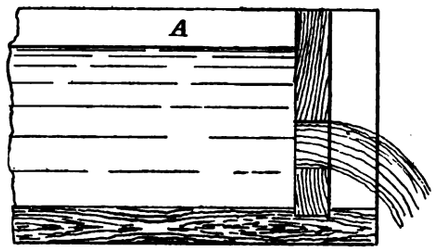

Plate CCLXI.

HYDRAULIC

CUP LEATHERS
PUMP LEATHERS
BUCKET LEATHERS
RAM LEATHERS ALL KINDS

ENTWISTLE'S PATENT HYDRAULIC LUBRICANT
Prevents Corrosion. Lubricates Perfectly.

FLEMING, BIRKBY & GOODALL,

LIMITED,

Late W. A. ENTWISTLE & CO.,

Hydraulic Leather Manufacturers, &c.,

11 MINSHULL STREET,

MANCHESTER.

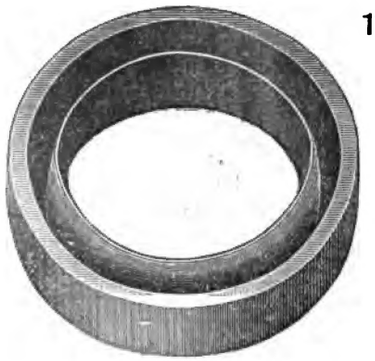

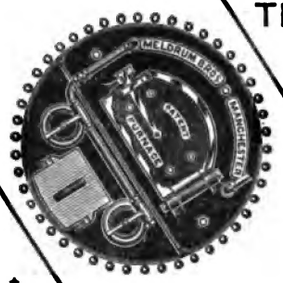

THE **"MELDRUM"**

FORCED DRAUGHT

FURNACE.

3500 AT WORK.

The cheapest Steam Raiser in the market.

No high chimney required.

All kinds of refuse fuel used

Evaporation largely increased.

Adopted by all the largest steam users in this country.

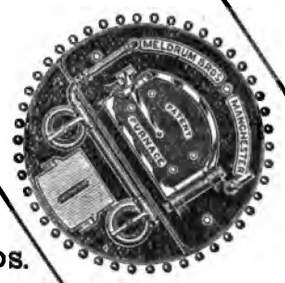

MELDRUM BROS.

ATLANTIC WORKS, MANCHESTER.
16 Union Court, LONDON.
5 East Parade, LEEDS.
Tel.: Meldrum, Manchester, London, and Leeds.

FOR **HYDRAULIC MACHINE TOOLS** APPLY

HENRY BERRY & CO.

LEEDS.

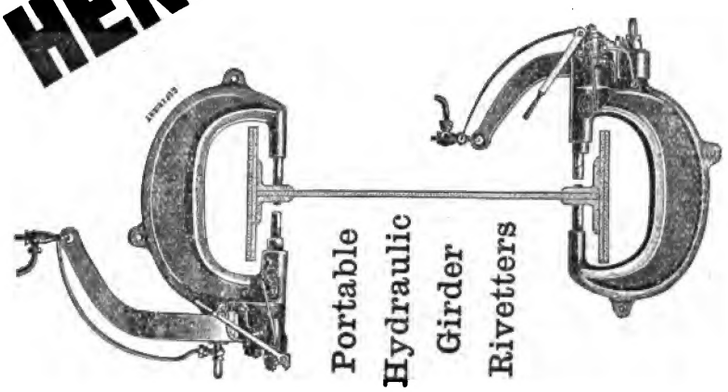

Portable Hydraulic Girder Rivetters

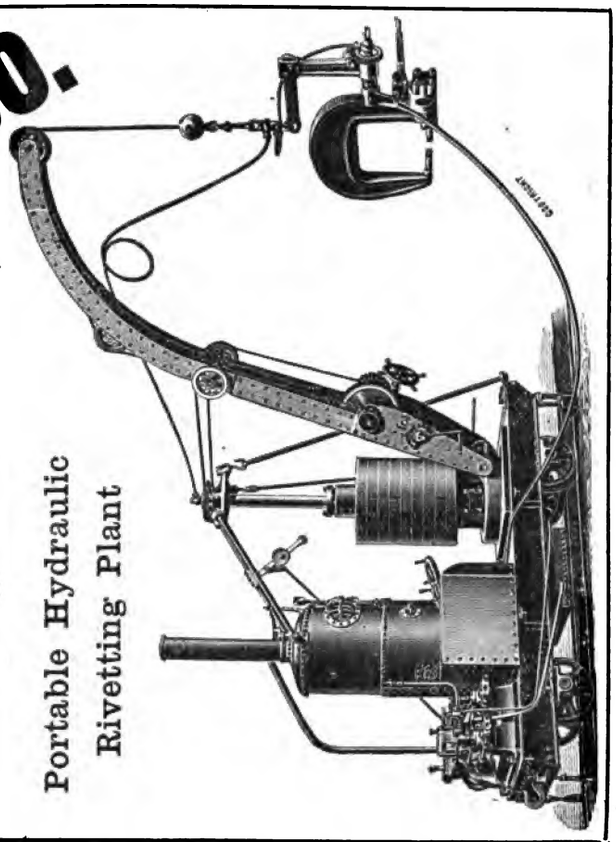

Portable Hydraulic Riveting Plant

TRADE

The Pulsometer

MARK.

PATENT

STEAM PUMP

FITTED WITH THE

"GREL" ARRANGEMENT.

PROTECTED BY THREE BRITISH AND MANY FOREIGN PATENTS.

The P. E. Co., Ld., having been for many years engaged in researches into the theoretical as well as the practical construction of this form of pump, may be supposed to be experts in these matters, and they

BROADLY AND DISTINCTLY CLAIM

THAT

THE PULSOMETER IS AND ALWAYS HAS BEEN THE MOST ECONOMICAL IN STEAM AS WELL AS THE BEST CONSTRUCTED PUMP OF ITS CLASS, and that any representations to the contrary are capable of easy disproof; and further, that the recent introduction of the "GREL" arrangement (which is fitted at an extra cost) **CARRIES THIS ECONOMY STILL FURTHER TO AN EXTENT OF 25 to 50 PER CENT.**

WHAT THE PULSOMETER WILL DO.

It will lift to a height of 80 ft. or more water and other liquids heavily charged with mud or grit.
It needs no oiling, tallow, packing, or skilled attention, and requires no foundation.
It will start at once without overhauling, even if it has been standing for months.
It will work suspended on a chain, and can be left all night on constant work.

WHAT THE PULSOMETER HAS DONE.

It has introduced itself to almost every industry where pumps are employed.
It has made its use a necessity for a variety of pumping operations.
It has made friends throughout the world.

IN EMERGENCIES

e.g., Pumps drowned out, Quarries, Mines, Workings, Foundations flooded, &c., wire to "PULSOMETER, LONDON," *who have always ready, which they can send away at a moment's notice,* PUMPS, BOILERS, PIPES, *&c.,* **ON HIRE** *or Sale.*

Write for Detailed List No. 48a, post-free,

THE PULSOMETER ENGINEERING CO., LD.

NINE ELMS IRON WORKS, LONDON, S.W.

A1, ABC, and Engineering Telegraphic Codes used. Tele. Address: "Pulsometer, London."

STANLEY'S

SURVEYING AND DRAWING INSTRUMENTS.

Every Article for Measurement and Office Work.

CATALOGUE FREE ON APPLICATION.

A.

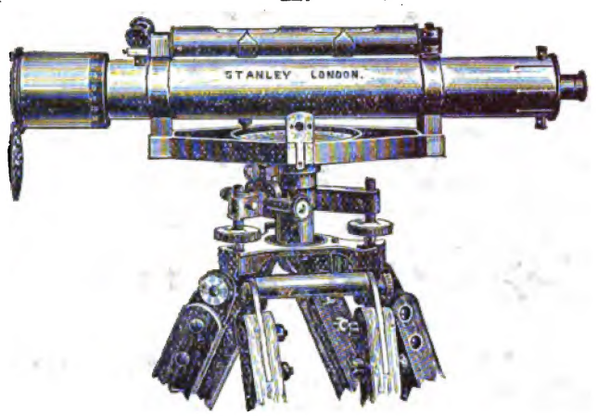

STANLEY'S PATENT.

B.

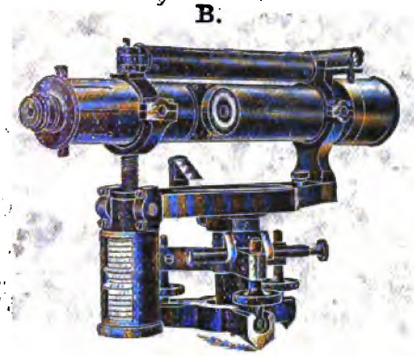

A. **STANLEY'S LEVELS** rank the highest of any in the world. Good Drainage Dumpy from £7 10s.

B. **STANLEY GRADIOMETER** works drainage to a uniform fall without calculation. Description will be forwarded.

HUDSON'S PUMP SCALE

Gives at sight, without any calculation, the diameter and stroke of either a single or double acting pump, needed at any given percentage of filling, to discharge any quantity in given time. The quantity discharged in any given time by either a single or double acting pump, working with any percentage of filling. The diameter of a valve or pipe needed for a given discharge at any desired speed of flow. The speed of flow through any size of valve or pipe, corresponding with a given discharge in a given time. The usual proportions for feed, injection, circulating and air pumps for different classes of engines, using various weights of steam and coal per 1 H.P. per hour.

2nd Ed., 'Stanley's Treatise on Surveying Instruments,' just published, 7s. 6d. post free.

6th Ed., 'Stanley's Treatise on Drawing Instruments,' 5s. post free.

W. F. STANLEY,

Surveying and Drawing Instrument Works,

GREAT TURNSTILE, HOLBORN, LONDON.

3 2044 079 966 735